EDH-3

PARTS MANUAL

MINOLTA

SFIX CHART

SFIX No.	COUNTRY	VOLTAGE	FREQUENCY (Hz)	PAPER SIZE	SFIX No.	COUNTRY	VOLTAGE	FREQUENCY (Hz)	PAPER SIZE
611	JAPAN	-	-	METRIC	614	EUROPE S ARABIA BRA-ZIL CURACAO TAIWAN S AFRICA AUSTRALIA HONG KONG L AMERICA KOREA	-	-	INCH/METRIC
612	USA/CANADA PHILIP-PINE	-	-	INCH					

CONTENTS

1. HOUSING ••••••

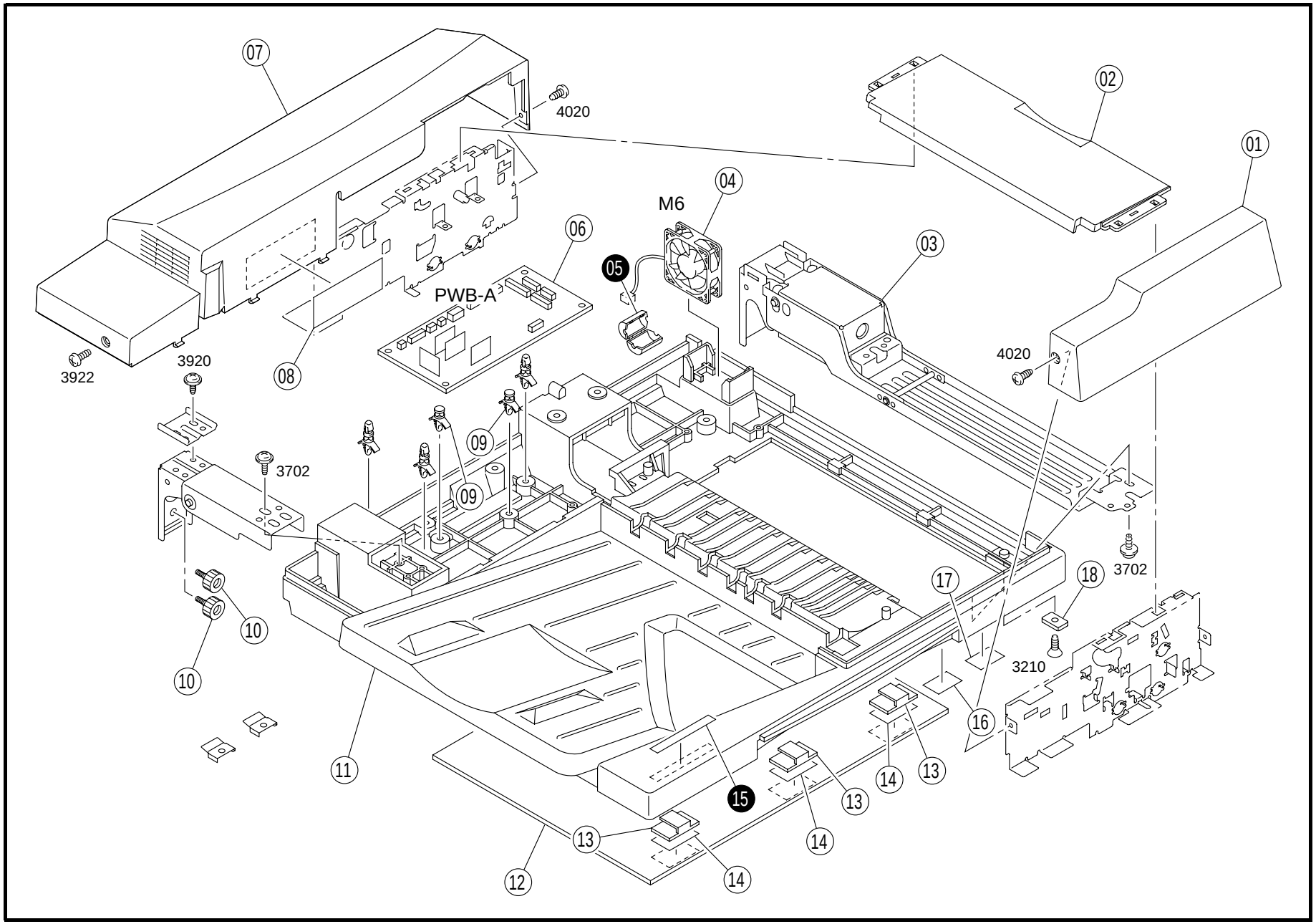
07
4020
02
01
04
M6
06
05
PWB-A
03
3922
3920
08
4020
09
3702
09
3702
18
17
10
10
3210
16
11
15
13
14
13
14
13
14
12

INDEX	PART NO.	PART NAME	REC	QTY
01	4641-1406-02	FRONT COVER		1
02	4641-1404-01	TOP COVER		1
03	4641-2601-01	HINGE		1
04	9313-1910-31	FAN MOTOR FAN (M6)		1
06	4641-0101-03	PWB ASSY DRIVE (PWB-A)	RP	1
07	4641-1407-03	REAR COVER		1
08	4641-7308-01	LABEL		1
09	9384-1900-61	PWB SUPPORT 6.2H		2
10	4426-2605-01	SHOULDER SCREW		4
11	4641-1401-02	BASE FRAME		1
12	4641-2501-01	ORIGINAL COVER MAT		1
13	1139-1703-02	SLIDER		3
14	4641-1701-01	TAPE		3
16	4641-7314-01	LABEL		1
17	4641-7313-01	LABEL		1
18	4469-2604-01	MAGNET		1

INDEX	PART NO.	PART NAME	REC	QTY	SFIX
05	9326-1910-21	FERRITE CORE		1	614
15	4641-7316-01	LABEL		1	611
15	4641-7317-01	LABEL		1	612, 614

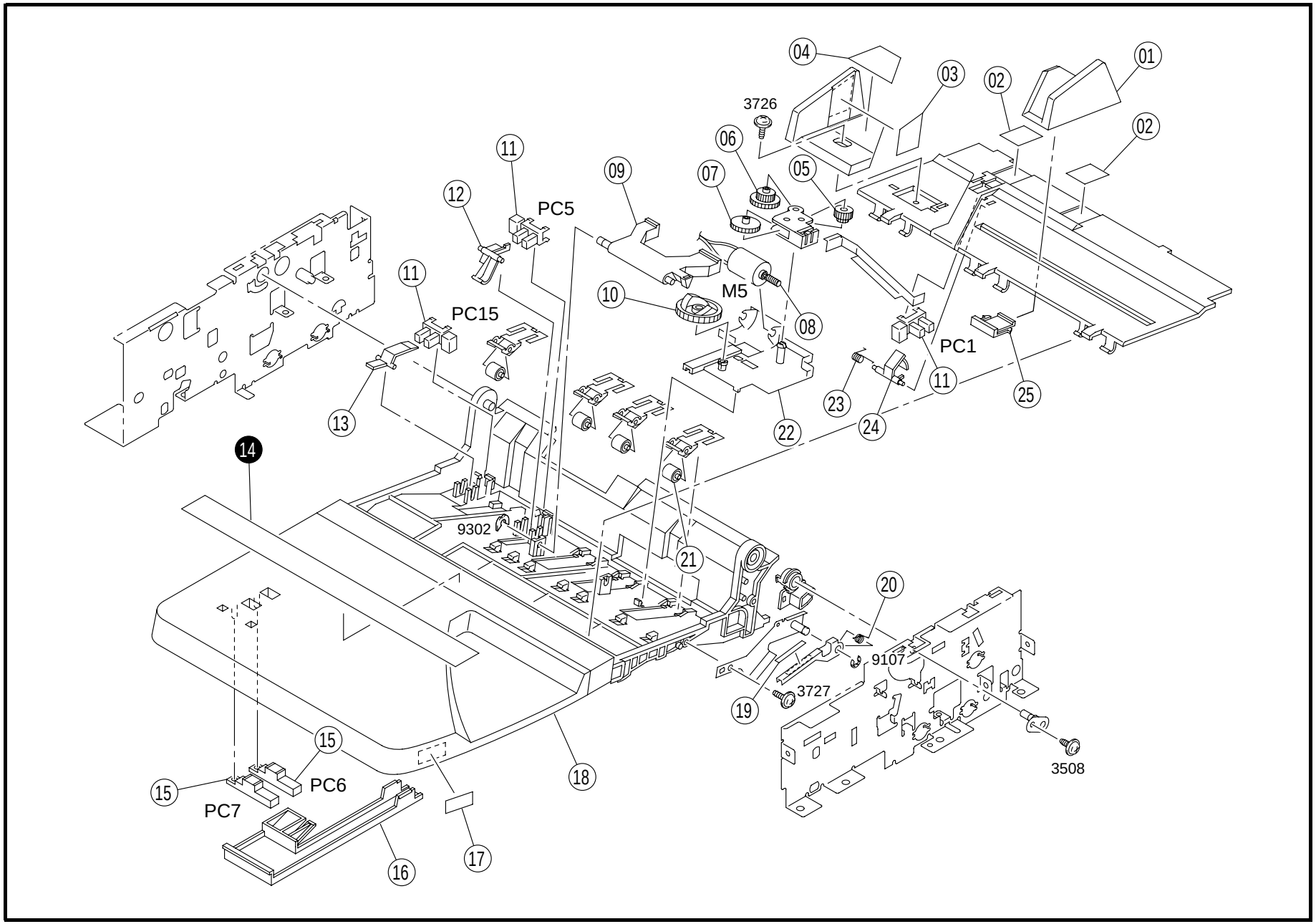
04
03
02
01
02
3726
06
05
07
09
11
12
PC5
11
PC15
10
M5
08
PC1
11
25
23
24
22
13
14
9302
21
20
9107
19
3727
3508
18
15
15
PC6
PC7
16
17

INDEX	PART NO.	PART NAME	REC	QTY
01	4641-3408-01	REGULATING PLATE		1
02	4641-3503-01	SEAL		2
03	4641-7304-01	LABEL		1
04	4641-7307-01	LABEL		1
05	4641-3415-01	GEAR		1
06	4641-3414-01	GEAR		1
07	4641-3436-01	GEAR		1
08	4641-0752-01	MOTOR ASSY PICKUP (M5)		1
09	4641-3411-02	LEVER		1
10	4641-3417-02	CAM		1
11	9335-1000-11	SOLID STATE SWITCH (PC1.5.15)		3
12	4641-4411-02	LEVER		1
13	4641-3431-01	LEVER		1
15	9335-1910-51	SOLID STATE SWITCH SIZE (PC6.7)		2
16	4641-3324-01	BRACKET		1
17	4641-7311-01	LABEL		1
18	4641-3405-02	TRAY		1
19	4641-7315-01	LABEL		1

INDEX	PART NO.	PART NAME	REC	QTY	SFIX
14	4641-7305-01	LABEL		1	611, 614
14	4641-7306-01	LABEL		1	612

INDEX	PART NO.	PART NAME	REC	QTY
20	4641-3201-01	TORSION SPRING		1
21	4426-4411-02	ROLL		4
22	4641-3307-02	BRACKET		1
23	4641-3202-01	TORSION SPRING		1
24	4641-3412-02	LEVER		1
25	4641-3409-02	SLIDER		1

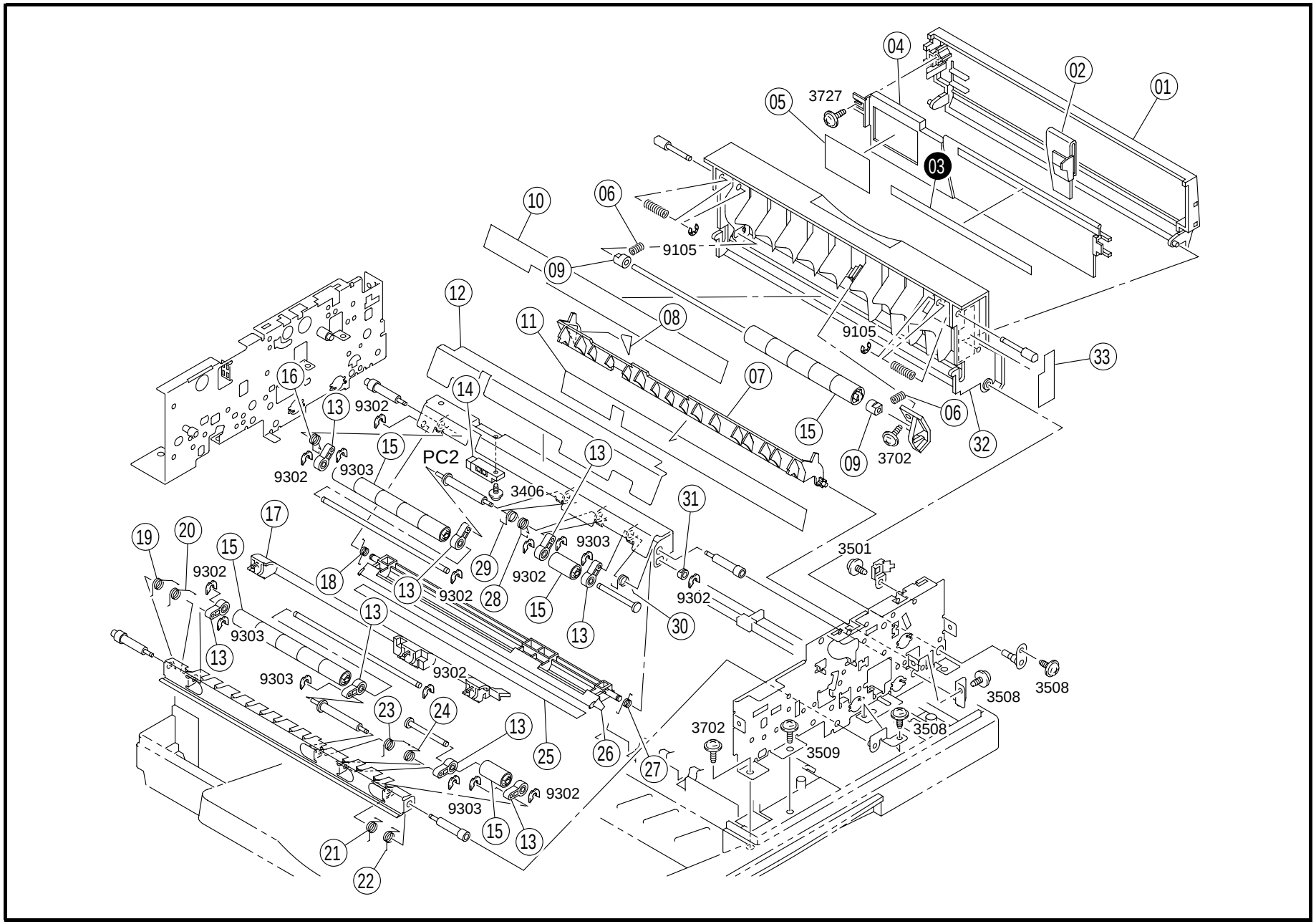
04
02
01
05
3727
03
10
06
9105
09
12
11
08
9105
33
07
16
14
13
9302
15
06
32
09
3702
15
PC2
13
9302
9303
3406
31
17
19
20
15
9303
3501
9302
29
9302
18
13
9302
28
15
9302
13
30
13
9303
13
9302
9303
3508
3508
23
24
13
3702
3508
25
26
27
3509
9302
9303
15
13
21
22

INDEX	PART NO.	PART NAME	REC	QTY
01	4641-1405-03	COVER		1
02	4641-3424-01	REGULATING PLATE		1
04	4641-3422-02	REGULATING PLATE		1
05	4641-7301-01	LABEL		1
06	4641-3228-01	PRESSURE SPRING		2
07	4641-4410-02	GUIDE		1
08	4641-7310-01	LABEL		1
09	4469-3456-01	BUSHING		2
10	4641-3504-01	FILM		1
11	4641-4505-01	FILM		1
12	4641-3510-01	FILM		1
13	4469-3451-01	ARM		8
14	4426-6302-01	PHOTO INTERRUPTER RESIST (PC2)		1
15	4641-3435-01	ROLL		17
16	4641-3224-02	TORSION SPRING		1
17	4641-3421-01	GUIDE		1
18	4641-3217-01	TORSION SPRING		1
19	4641-3219-01	TORSION SPRING		1
20	4641-3211-02	TORSION SPRING		1
21	4641-3212-02	TORSION SPRING		1
22	4641-3218-01	TORSION SPRING		1
23	4641-3210-02	TORSION SPRING		1
24	4641-3213-02	TORSION SPRING		1
25	4641-3505-01	FILM		1
26	4641-3427-03	GUIDE		1
27	4641-3216-01	TORSION SPRING		1
28	4641-3226-02	TORSION SPRING		1
29	4641-3223-02	TORSION SPRING		1
30	4641-3225-02	TORSION SPRING		1
31	1200-3221-04	BUSHING		1
32	4641-1402-03	RIGHT COVER		1
33	4641-7309-01	LABEL		1

INDEX	PART NO.	PART NAME	REC	QTY	SFIX
03	4641-7302-01	LABEL		1	611, 614
03	4641-7303-01	LABEL		1	612

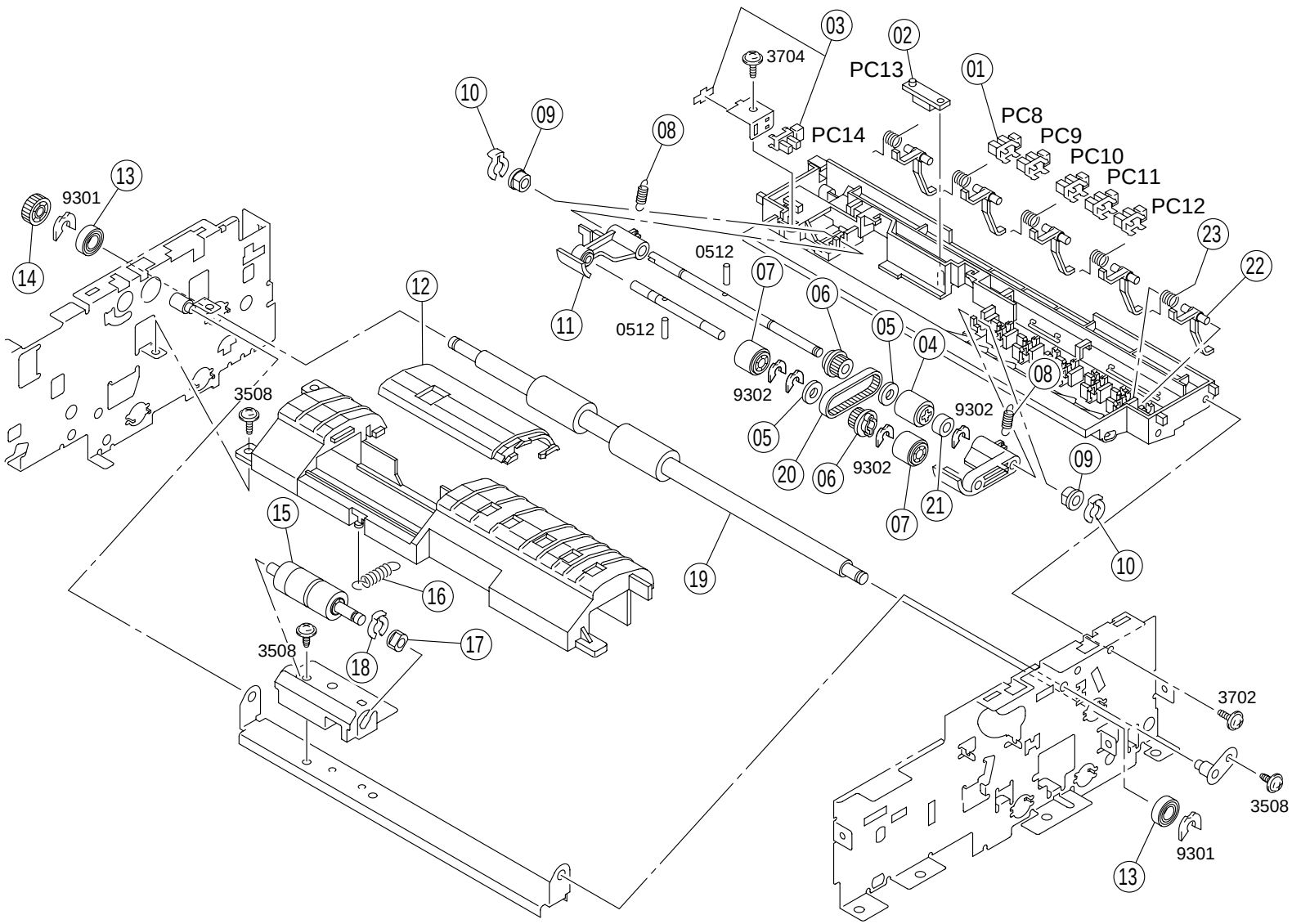
03
02
3704
PC13
01
10
09
08
PC14
PC8
PC9
PC10
PC11
PC12
13
9301
14
0512
07
06
23
22
12
11
0512
05
04
08
3508
9302
9302
05
20
06
9302
09
21
07
15
10
19
16
17
3508
18
3702
3508
9301
13

INDEX	PART NO.	PART NAME	REC	QTY
01	9335-1000-11	SOLID STATE SWITCH SIZE (PC8-12)		5
02	9335-1910-91	SOLID STATE SWITCH SEPARATE (PC13)		1
03	4641-0901-01	SOLID STATE SWITCH U.LIMIT (PC14)		1
04	4469-3504-01	ROLLER	RP	1
05	4469-3468-01	WASHER		2
06	4469-3406-01	PULLEY 20T		2
07	4641-3513-02	ROLLER		2
08	4641-3203-01	TENSION SPRING		2
09	4469-3465-01	BUSHING		2
10	1279-3406-01	STOPPER RING		2
11	4641-3401-01	ARM		1
12	4641-3433-02	COVER		1
13	1273-3516-01	BALL BEARING		2
14	4641-2405-01	GEAR		1
15	4641-0153-01	ROLLER ASSY	RP	1
16	4469-3201-01	TENSION SPRING		1
17	1200-3121-09	BUSHING		1
18	1033-4402-01	STOPPER RING		1

INDEX	PART NO.	PART NAME	REC	QTY
19	4641-3509-02	ROLLER		1
20	4641-3514-01	TIMING BELT		1
21	1284-3404-01	COLLAR		1
22	4641-3403-01	LEVER		5
23	4641-3204-02	TORSION SPRING		5

INDEX	PART NO.	PART NAME	REC	QTY	SFIX

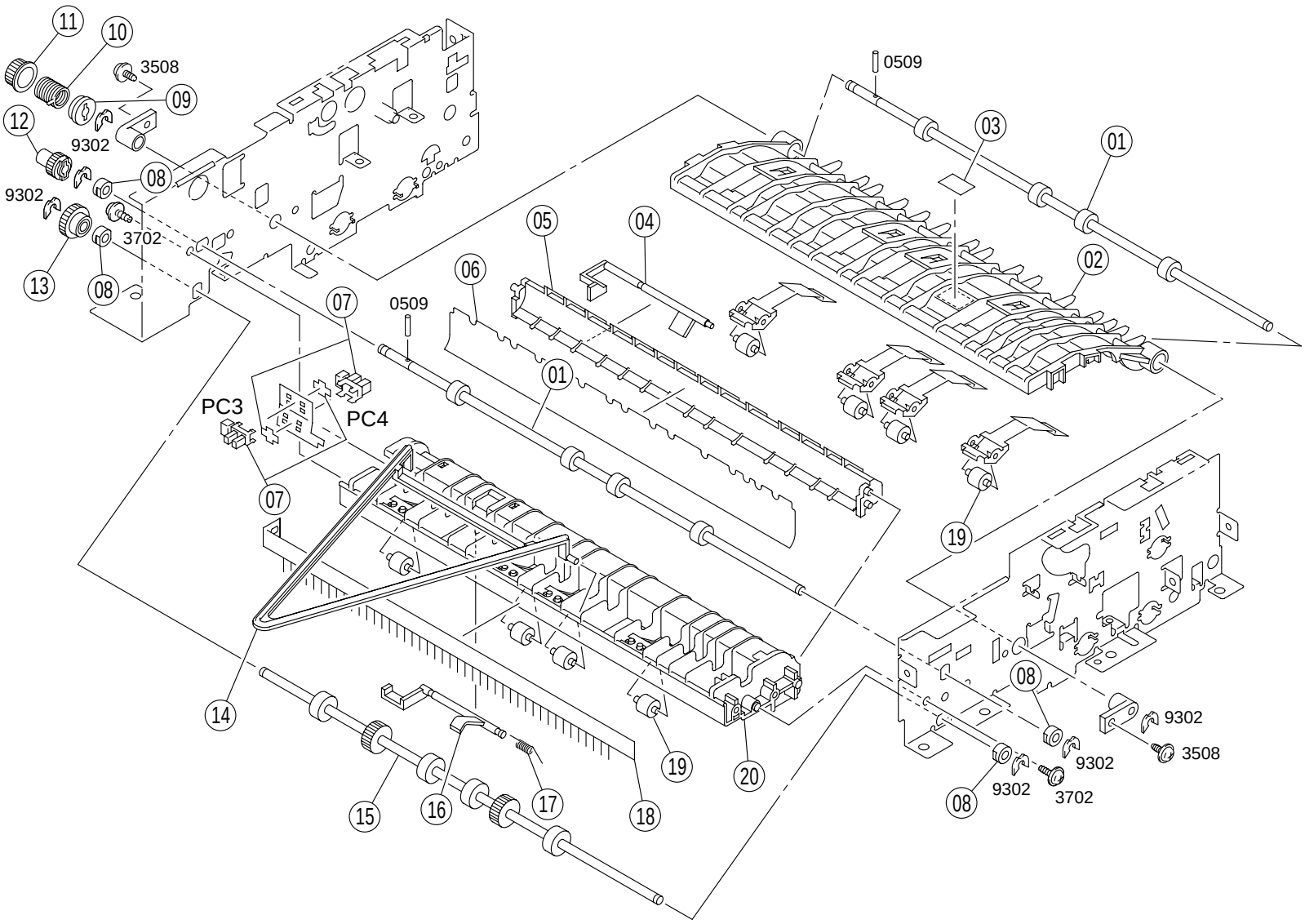
11
10
3508
09
12
9302
08
9302
3702
13
08
07
0509
06
05
04
0509
03
01
02
01
PC3
PC4
07
19
14
15
16
17
18
19
20
08
9302
3508
9302
08
9302
3702

INDEX	PART NO.	PART NAME	REC	QTY
01	4641-4508-01	ROLLER		2
02	4641-4405-01	GUIDE		1
03	4641-7312-01	LABEL		1
04	4641-4413-01	LEVER		1
05	4641-4406-02	GUIDE		1
06	4641-4502-02	FILM		1
07	4641-0901-01	SOLID STATE SWITCH (PC3.4)		2
08	1200-3121-07	BUSHING		4
09	4641-2412-01	DRUM		1
10	4641-2205-01	COIL	RP	1
11	4641-2403-01	PULLEY		1
12	4641-2407-01	GEAR		1
13	4641-2411-02	GEAR		1
14	4641-4504-02	GUIDE		1
15	4641-4509-01	ROLLER		1
16	4641-4412-02	LEVER		1
17	4641-4205-02	TORSION SPRING		1
18	4469-4505-01	NEURALIZING BRUSH		1
19	4426-4411-02	ROLL		8
20	4641-0753-01	GUIDE ASSY		1

INDEX	PART NO.	PART NAME	REC	QTY	SFIX

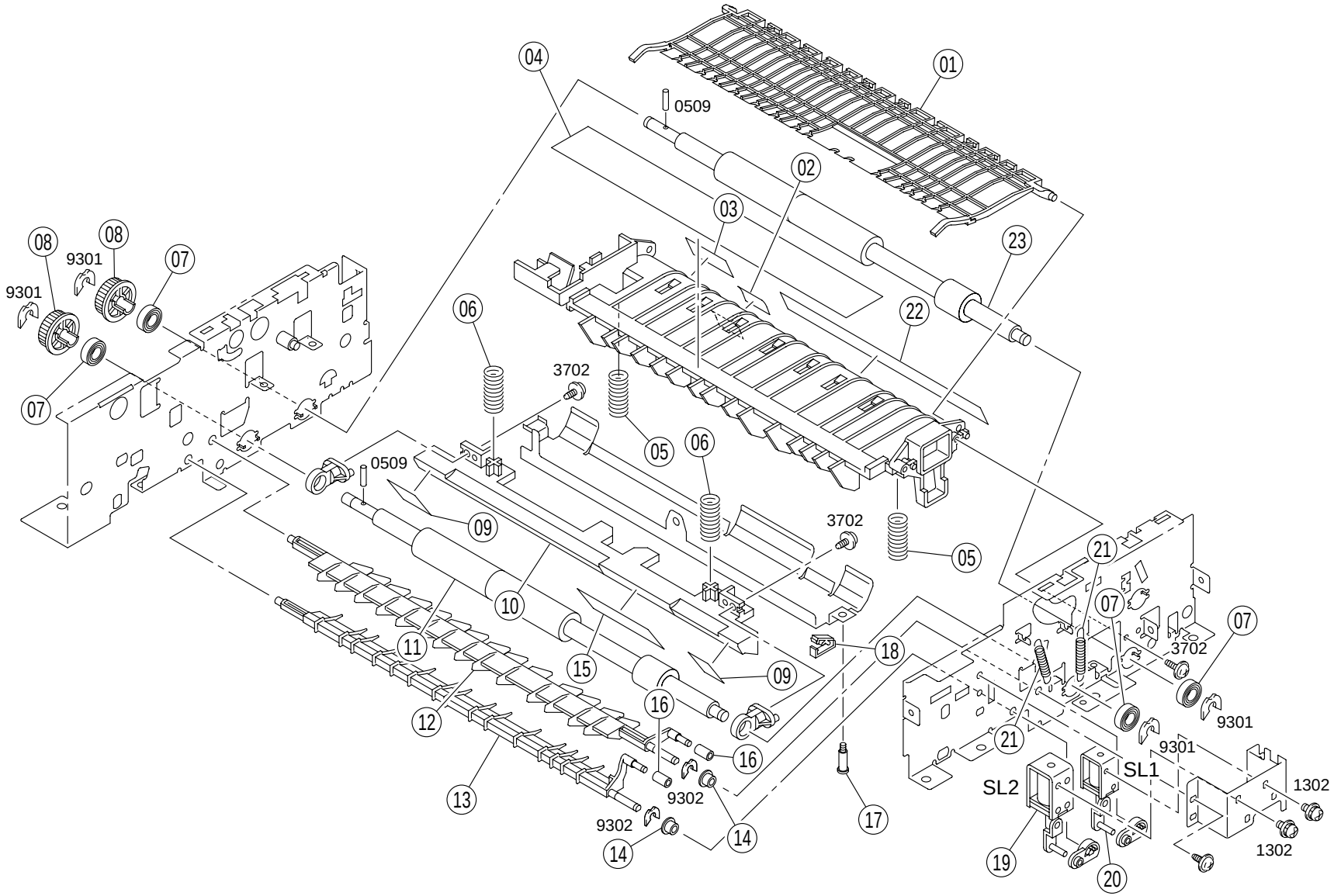
01
02
03
04
05
06
07
08
09
10
11
12
13
14
15
16
17
18
19
20
21
22
23
0509
3702
9301
9302
1302
SL1
SL2

INDEX	PART NO.	PART NAME	REC	QTY
01	4641-4403-02	GUIDE		1
02	4641-4507-01	SEAL		1
03	4641-4510-01	GUIDE		1
04	4641-4501-02	FILM		1
05	4641-3215-01	PRESSURE SPRING		2
06	4641-3214-01	PRESSURE SPRING		2
07	1273-3516-01	BALL BEARING		4
08	4641-2401-01	PULLEY		2
09	4641-3512-01	FILM		2
10	4641-3420-01	GUIDE		1
11	4469-3502-12	ROLLER		1
12	4641-4401-01	PAWL		1
13	4641-4402-01	PAWL		1
14	0990-3033-01	COLLAR		2
15	4641-3515-01	FILM		1
16	4475-4501-01	RUBBER STRIP		2
17	1100-1344-12	SHOULDER SCREW		1
18	4641-3434-01	SPACER		2
19	4641-0755-01	SOLENOID ASSY EXIT (SL2)		1
20	4641-0754-01	SOLENOID ASSY DUPLEX (SL1)		1
21	4641-4207-01	TENSION SPRING		2
22	4641-4506-01	GUIDE		1
23	4469-3501-12	ROLLER		1

INDEX	PART NO.	PART NAME	REC	QTY	SFIX

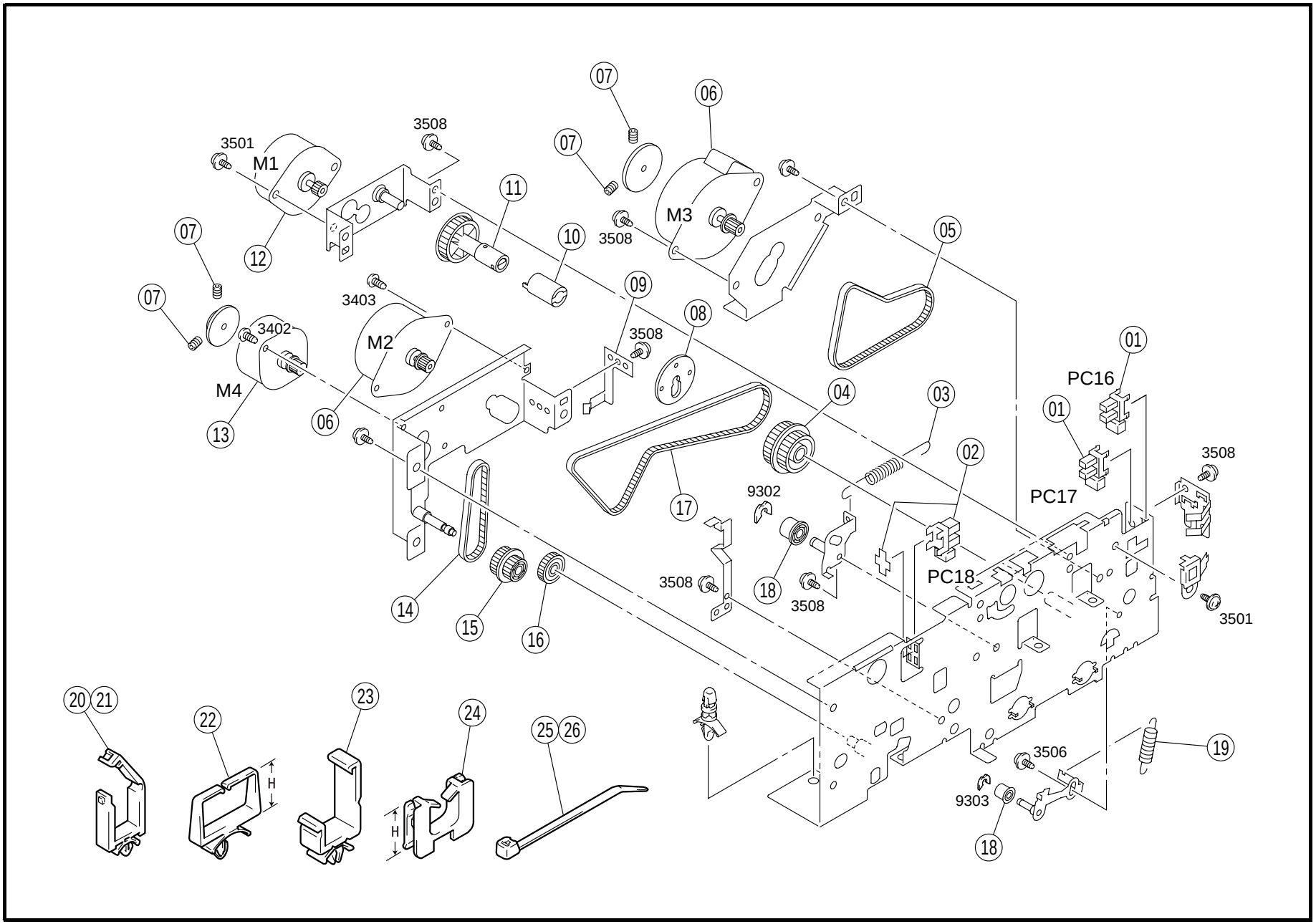
07
06
3508
3501
M1
07
11
M3
3508
05
07
12
10
09
07
3403
08
3402
M2
3508
01
PC16
M4
04
03
01
13
06
02
3508
9302
PC17
17
PC18
3508
18
3508
3501
14
15
16
20
21
22
23
24
25
26
H
H
19
3506
9303
18

INDEX	PART NO.	PART NAME			REC	QTY
01	9335-1000-11	SOLID STATE SWITCH		(PC16.17)		2
02	4641-0901-01	SOLID STATE SWITCH		(PC18)		1
03	4641-2203-02	TENSION SPRING				1
04	4641-2406-01	PULLEY				1
05	4641-2502-01	TIMING BELT				1
06	9314-1910-93	MOTOR		(M2.3)		2
07	1139-4233-01	SET SCREW				4
08	4641-2410-01	WASHER				1
09	4641-4208-01	PLATE SPRING				1
10	1284-2410-01	COVER				1
11	4641-0751-01	GEAR ASSY				1
12	9314-1910-72	MOTOR	TAKE-UP	(M1)		1
13	9314-1911-53	MOTOR	EXIT	(M4)		1
14	4641-2503-01	TIMING BELT				1
15	4641-2402-01	PULLEY				1
16	4641-2408-01	GEAR				1
17	4641-2504-01	TIMING BELT				1
18	4469-2447-01	PULLEY				2

INDEX	PART NO.	PART NAME	REC	QTY	SFIX

INDEX	PART NO.	PART NAME	REC	QTY
19	4641-2202-01	TENSION SPRING		1
20	9384-1211-01	WIRING SADDLE 19.2H		3
21	9384-1310-11	WIRING SADDLE 5.2H		3
22	9384-1310-81	WIRING SADDLE 6.4H		6
23	9384-1311-01	WIRING SADDLE 27H		5
24	9384-2010-21	EDGE COVER 8.5H		6
25	9384-1311-11	CABLE TIE 104L		1
26	9384-1821-41	CABLE TIE		1

INDEX	PART NO.	PART NAME	ILLUST
0509 0512	9752-2012-50 9752-2008-50	PIN	
1302 1305	9646-0305-13 9646-0306-13	SCREW	
3210	9657-0314-13	TAPPING SCREW	
3402 3403 3406	9733-0306-13 9733-0308-13 9733-0312-13	TAPPING SCREW	
3501 3504 3506 3508 3509 3522	9735-0306-13 9735-0308-13 9735-0406-13 9735-0408-13 9735-0410-13 9735-0408-01	TAPPING SCREW	
3701 3702 3704 3726 3727	9739-0408-13 9739-0410-13 9739-0308-13 9739-0408-14 9739-0308-14	TAPPING SCREW	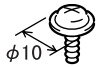
3903 3920 3922	9742-0408-01 9742-0408-14 9742-0410-14	TAPPING SCREW	
4020	9743-0408-14	TAPPING SCREW	
7107	9684-0406-08	SET SCREW	
8302	9712-0400-13	WASHER	
8509	9716-0500-01	WASHER	
9105 9107 9124 9125	9721-0300-01 9721-0400-01 9721-0300-13 9721-0400-13	RETAINING RING	
9301 9302 9303	1066-1151-01 4425-3001-01 4425-3002-01	RETAINING RING	
INDEX	PART NO.	PART NAME	ILLUST

PART NO.	FIG.	INDEX	QTY		PART NO.	FIG.	INDEX	QTY		PART NO.	FIG.	INDEX	QTY		PART NO.	FIG.	INDEX	QTY	
0990-3033-01	06	14	2		4641-3211-02	03	20	1		4641-7305-01	02	14	1						
1033-4402-01	04	18	1		4641-3212-02	03	21	1		4641-7306-01	02	14	1						
1100-1344-12	06	17	1		4641-3213-02	03	24	1		4641-7307-01	02	04	1						
1139-1703-02	01	13	3		4641-3214-01	06	06	2		4641-7308-01	01	08	1						
1139-4233-01	07	07	4		4641-3215-01	06	05	2		4641-7309-01	03	33	1						
1200-3121-07	05	08	4		4641-3216-01	03	27	1		4641-7310-01	03	08	1						
1200-3121-09	04	17	1		4641-3217-01	03	18	1		4641-7311-01	02	17	1						
1200-3221-04	03	31	1		4641-3218-01	03	22	1		4641-7312-01	05	03	1						
1273-3516-01	04	13	2		4641-3219-01	03	19	1		4641-7313-01	01	17	1						
1273-3516-01	06	07	4		4641-3223-02	03	29	1		4641-7314-01	01	16	1						
1279-3406-01	04	10	2		4641-3224-02	03	16	1		4641-7315-01	02	19	1						
1284-2410-01	07	10	1		4641-3225-02	03	30	1		4641-7316-01	01	15	1						
1284-3404-01	04	21	1		4641-3226-02	03	28	1		4641-7317-01	01	15	1						
4426-2605-01	01	10	4		4641-3228-01	03	06	2		9313-1910-31	01	04	1						
4426-4411-02	02	21	4		4641-3307-02	02	22	1		9314-1910-72	07	12	1						
4426-4411-02	05	19	8		4641-3324-01	02	16	1		9314-1910-93	07	06	2						
4426-6302-01	03	14	1		4641-3401-01	04	11	1		9314-1911-53	07	13	1						
4469-2447-01	07	18	2		4641-3403-01	04	22	5		9326-1910-21	01	05	1						
4469-2604-01	01	18	1		4641-3405-02	02	18	1		9335-1000-11	02	11	3						
4469-3201-01	04	16	1		4641-3408-01	02	01	1		9335-1000-11	04	01	5						
4469-3406-01	04	06	2		4641-3409-02	02	25	1		9335-1000-11	07	01	2						
4469-3451-01	03	13	8		4641-3411-02	02	09	1		9335-1910-51	02	15	2						
4469-3456-01	03	09	2		4641-3412-02	02	24	1		9335-1910-91	04	02	1						
4469-3465-01	04	09	2		4641-3414-01	02	06	1		9384-1211-01	07	20	3						
4469-3468-01	04	05	2		4641-3415-01	02	05	1		9384-1310-11	07	21	3						
4469-3501-12	06	23	1		4641-3417-02	02	10	1		9384-1310-81	07	22	6						
4469-3502-12	06	11	1		4641-3420-01	06	10	1		9384-1311-01	07	32	5						
4469-3504-01	04	04	1		4641-3421-01	03	17	1		9384-1311-11	07	25	1						
4469-4505-01	05	18	1		4641-3422-02	03	04	1		9384-1821-41	07	26	1						
4475-4501-01	06	16	2		4641-3424-01	03	02	1		9384-1900-61	01	09	2						
4641-0101-03	01	06	1		4641-3427-03	03	26	1		9384-2010-21	07	24	6						
4641-0153-01	04	15	1		4641-3431-01	02	13	1											
4641-0751-01	07	11	1		4641-3433-02	04	12	1											
4641-0752-01	02	08	1		4641-3434-01	06	18	2											
4641-0753-01	05	20	1		4641-3435-01	03	15	17											
4641-0754-01	06	20	1		4641-3436-01	02	07	1											
4641-0755-01	06	19	1		4641-3503-01	02	02	2											
4641-0901-01	04	03	1		4641-3504-01	03	10	1											
4641-0901-01	05	07	2		4641-3505-01	03	25	1											
4641-0901-01	07	02	1		4641-3509-02	04	19	1											
4641-1401-02	01	11	1		4641-3510-01	03	12	1											
4641-1402-03	03	32	1		4641-3512-01	06	09	2											
4641-1404-01	01	02	1		4641-3513-02	04	07	2											
4641-1405-03	03	01	1		4641-3514-01	04	20	1											
4641-1406-02	01	01	1		4641-3515-01	06	15	1											
4641-1407-03	01	07	1		4641-4205-02	05	17	1											
4641-1701-01	01	14	3		4641-4207-01	06	21	2											
4641-2202-01	07	19	1		4641-4208-01	07	09	1											
4641-2203-02	07	03	1		4641-4401-01	06	12	1											
4641-2205-01	05	10	1		4641-4402-01	06	13	1											
4641-2401-01	06	08	2		4641-4403-02	06	01	1											
4641-2402-01	07	15	1		4641-4405-01	05	02	1											
4641-2403-01	05	11	1		4641-4406-02	05	05	1											
4641-2405-01	04	14	1		4641-4410-02	03	07	1											
4641-2406-01	07	04	1		4641-4411-02	02	12	1											
4641-2407-01	05	12	1		4641-4412-02	05	16	1											
4641-2408-01	07	16	1		4641-4413-01	05	04	1											
4641-2410-01	07	08	1		4641-4501-02	06	04	1											
4641-2411-02	05	13	1		4641-4502-02	05	06	1											
4641-2412-01	05	09	1		4641-4504-02	05	14	1											
4641-2501-01	01	12	1		4641-4505-01	03	11	1											
4641-2502-01	07	05	1		4641-4506-01	06	22	1											
4641-2503-01	07	14	1		4641-4507-01	06	02	1											
4641-2504-01	07	17	1		4641-4508-01	05	01	2											
4641-2601-01	01	03	1		4641-4509-01	05	15	1											
4641-3201-01	02	20	1		4641-4510-01	06	03	1											
4641-3202-01	02	23	1		4641-7301-01	03	05	1											
4641-3203-01	04	08	2		4641-7302-01	03	03	1											
4641-3204-02	04	23	5		4641-7303-01	03	03	1											
4641-3210-02	03	23	1		4641-7304-01	02	03	1											



Copyright
2000 MINOLTA Co., Ltd.
Printed in Japan

4641-7995-21 00082830