FN-105

PARTS MANUAL

MINOLTA

SFIX CHART

SFIX No.	COUNTRY	VOLTAGE	FREQUENCY (Hz)	PAPER SIZE	SFIX No.	COUNTRY	VOLTAGE	FREQUENCY (Hz)	PAPER SIZE
611	JAPAN	-	-	METRIC	613	S ARABIA BRAZIL CURA-CAO TAIWAN S AFRICA AUSTRALIA HONG KONG L AMERICA KOREA	-	-	METRIC
612	USA/CANADA PHILIP-PINE	-	-	INCH	614	EUROPE	-	-	INCH/METRIC

CONTENTS

1. HOUSING ••••••

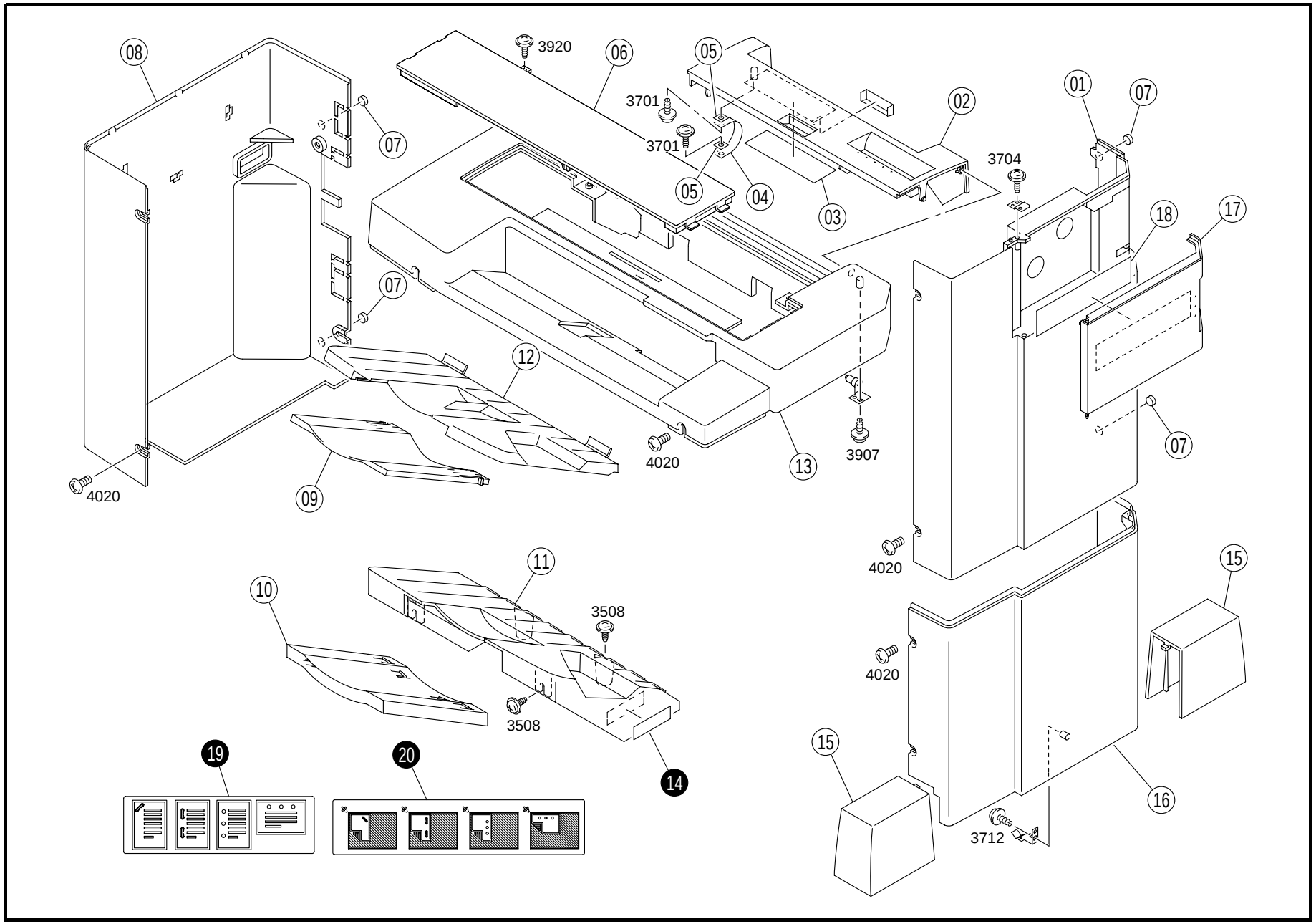
08
3920
06
05
3701
3701
05
04
02
03
01
07
07
3704
18
17
07
07
12
4020
09
4020
13
3907
4020
11
10
3508
3508
14
15
4020
15
16
3712
19
20

INDEX	PART NO.	PART NAME	REC	QTY	INDEX	PART NO.	PART NAME	REC	QTY
01	4643-1001-03	FRONT COVER		1					
02	4643-1004-05	COVER		1					
03	4643-7301-01	LABEL		1					
04	4643-1020-02	BAND		1					
05	1053-3103-01	PLATE		2					
06	4643-1005-02	TOP COVER		1					
07	4643-1009-02	STOPPER		4					
08	4643-1002-03	REAR COVER		1					
09	4643-4202-02	TRAY		1					
10	4643-4302-01	TRAY		1					
11	4643-4301-03	TRAY		1					
12	4643-4201-02	TRAY		1					
13	4643-1003-05	TOP COVER		1					
15	4643-2009-02	GUIDE		2					
16	4643-1011-02	FRONT COVER		1					
17	4643-1010-04	FRONT COVER		1					
18	4643-7302-01	LABEL		1					

INDEX	PART NO.	PART NAME	REC	QTY	SFIX
14	4643-7311-01	LABEL		1	611
14	4643-7318-01	LABEL		1	612, 613, 614
19	4643-7312-01	LABEL		1	611, 613
19	4643-7313-01	LABEL		1	612
19	4643-7314-01	LABEL		1	614
20	4643-7315-01	LABEL		1	611, 613
20	4643-7316-01	LABEL		1	612
20	4643-7317-01	LABEL		1	614

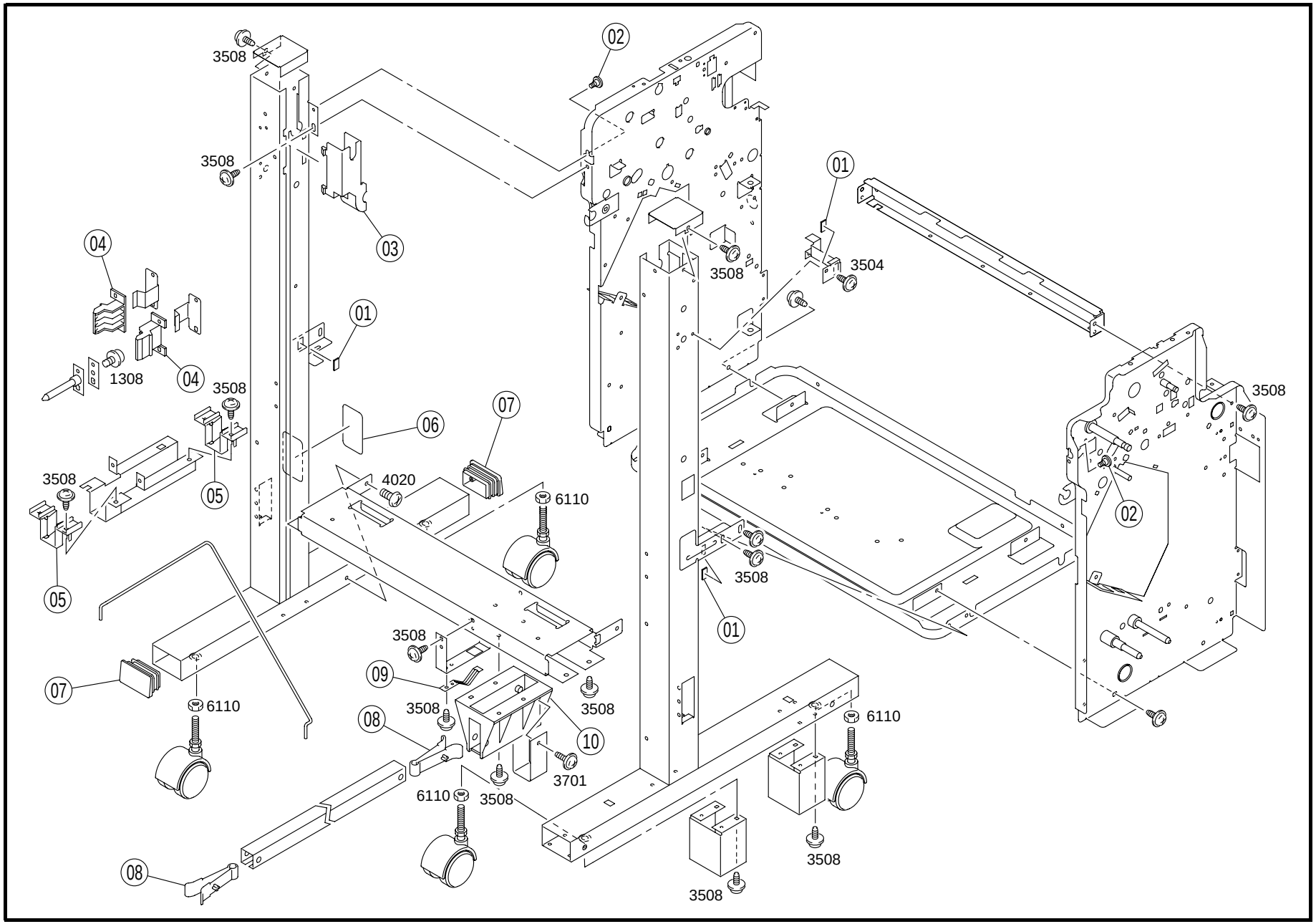
3508
3508
02
01
03
04
3508
3504
01
1308
04
3508
06
07
3508
4020
6110
05
05
02
3508
01
3508
09
07
6110
3508
3508
08
10
6110
3701
6110
3508
3508
08
3508

INDEX	PART NO.	PART NAME	REC	QTY	INDEX	PART NO.	PART NAME	REC	QTY
01	4643-4614-01	CUSHION		3					
02	1100-1340-09	SHOULDER SCREW		2					
03	4643-1015-03	COVER		1					
04	4643-2101-02	PAWL		2					
05	4643-2116-04	GUIDE		2					
06	4643-2130-01	FILM		1					
07	4643-2008-01	CAP		2					
08	4493-2414-02	STOPPER		2					
09	4643-2115-01	PLATE SPRING		1					
10	4643-2114-01	BRACKET		1					

INDEX	PART NO.	PART NAME	REC	QTY	SFIX

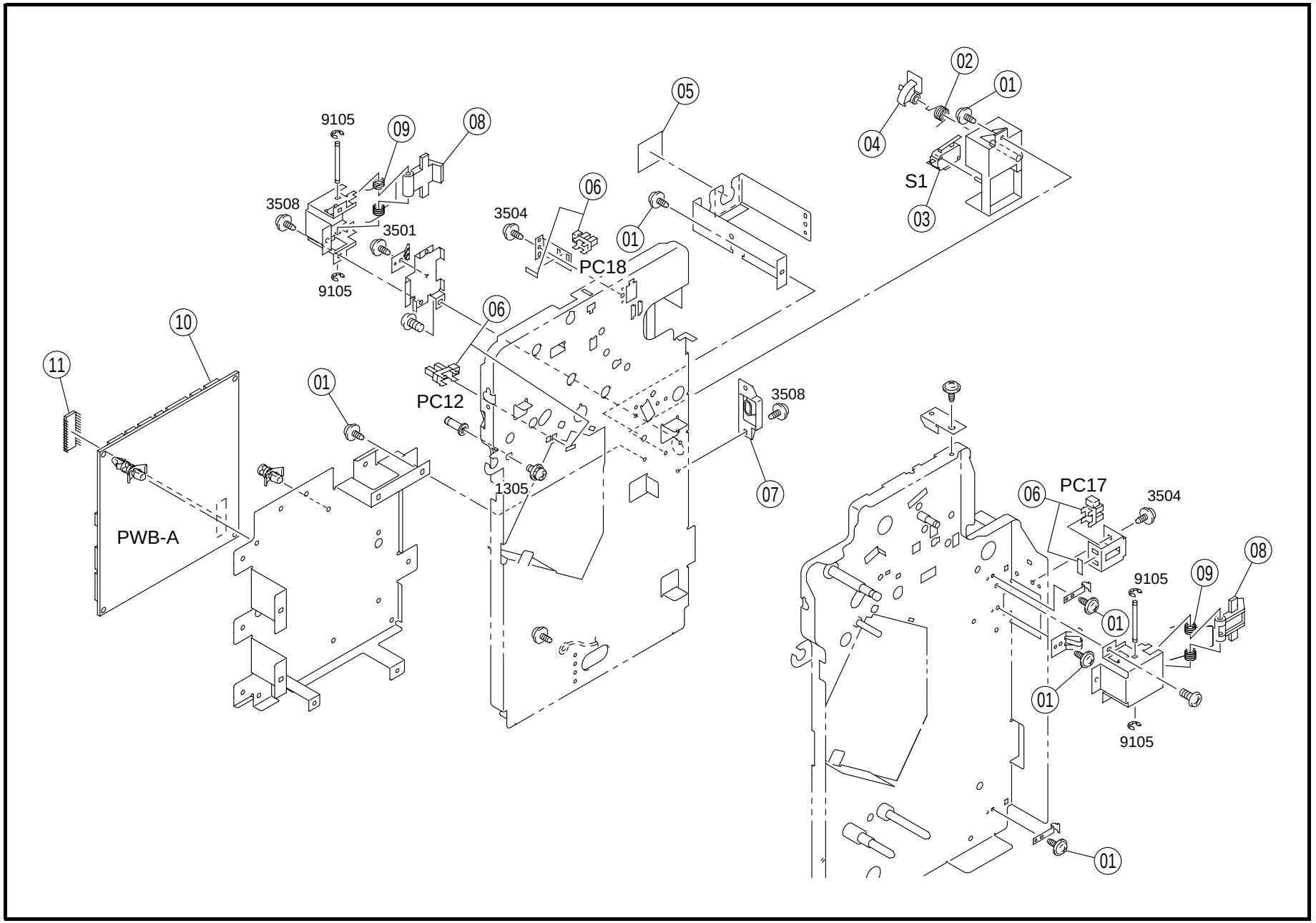
02
01
04
S1
03
05
9105
09
08
3508
3501
3504
06
01
PC18
9105
06
10
11
01
PC12
3508
07
1305
PWB-A
06
PC17
3504
9105
09
08
01
01
9105
01

INDEX	PART NO.	PART NAME	REC	QTY	INDEX	PART NO.	PART NAME	REC	QTY
01	4154-3804-01	SCREW		12					
02	4643-2112-01	TORSION SPRING		1					
03	9331-2710-11	MICRO SWITCH SET (S1)		1					
04	4643-2119-02	ACTUATOR		1					
05	4643-2132-01	FILM		1					
06	4122-0901-01	PHOTO INTERRUPTER (PC12.17.18)		3					
07	4643-2131-02	GUIDE		1					
08	4643-2103-01	CATCH		2					
09	4643-2105-01	TORSION SPRING		2					
10	4643-0101-03	PWB ASSY CONTROL (PWB-A)	RP	1					
11	4643-6601-01	IC (IC3)		1					

INDEX	PART NO.	PART NAME	REC	QTY	SFIX

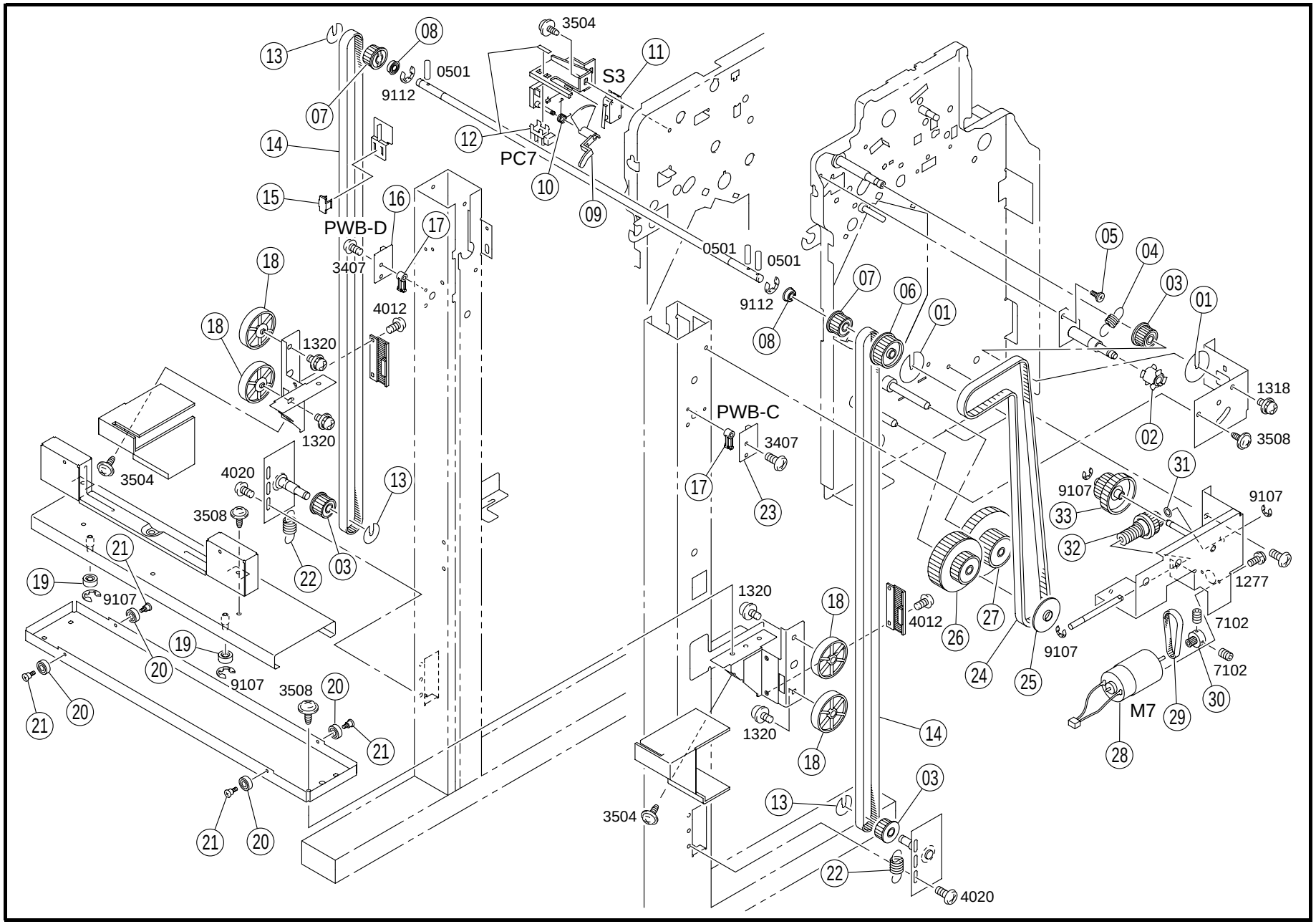
3504
S3
0501
9112
PC7
PWB-D
3407
4012
1320
1320
3504
4020
3508
0501
0501
9112
PWB-C
3407
1318
3508
9107
9107
1277
7102
7102
M7
9107
9107
3508
1320
1320
4012
3504
4020

INDEX	PART NO.	PART NAME	REC	QTY
01	4643-4411-01	FLANGE		2
02	4643-4521-01	PULLEY		1
03	4643-4404-01	PULLEY		3
04	4643-4525-01	TENSION SPRING		1
05	1100-1340-09	SHOULDER SCREW		1
06	4643-4516-02	PULLEY		1
07	4643-4402-02	PULLEY		2
08	1300-4342-07	BALL BEARING		2
09	4643-4801-02	ACTUATOR		1
10	4643-4802-01	TORSION SPRING		1
11	9331-2310-11	MICROSWITCH LOWER LIM (S3)		1
12	4122-0901-01	PHOTO INTERRUPTER LOWER LIM (PC7)		1
13	4643-4412-01	FLANGE		3
14	4643-4401-01	TIMING BELT		2
15	4643-4805-01	HOLDER		1
16	4611-6054-01	PW BOARD (PWB-D)		1
17	4643-4806-01	GUIDE		2
18	4643-0760-01	ROLL ASSY		4
19	4643-4604-01	ROLL		2
20	1300-4322-01	BALL BEARING		4
21	4643-4605-01	SHOULDER SCREW		4
22	4643-4413-01	TENSION SPRING		2
23	4611-6053-01	PW BOARD (PWB-C)		1
24	4643-4515-01	TIMING BELT		1
25	4643-4527-01	FLANGE		1
26	4611-4612-01	GEAR 35/75T		1
27	4643-4505-01	GEAR		1
28	4643-0751-01	MOTOR ASSY ELEVATOR (M7)		1
29	4643-4510-01	TIMING BELT		1
30	4643-4513-03	PULLEY		1
31	1200-1342-03	WASHER		1
32	4611-4609-01	PULLEY 29T		1
33	4611-4611-01	GEAR 28/42T		1

INDEX	PART NO.	PART NAME	REC	QTY	SFIX

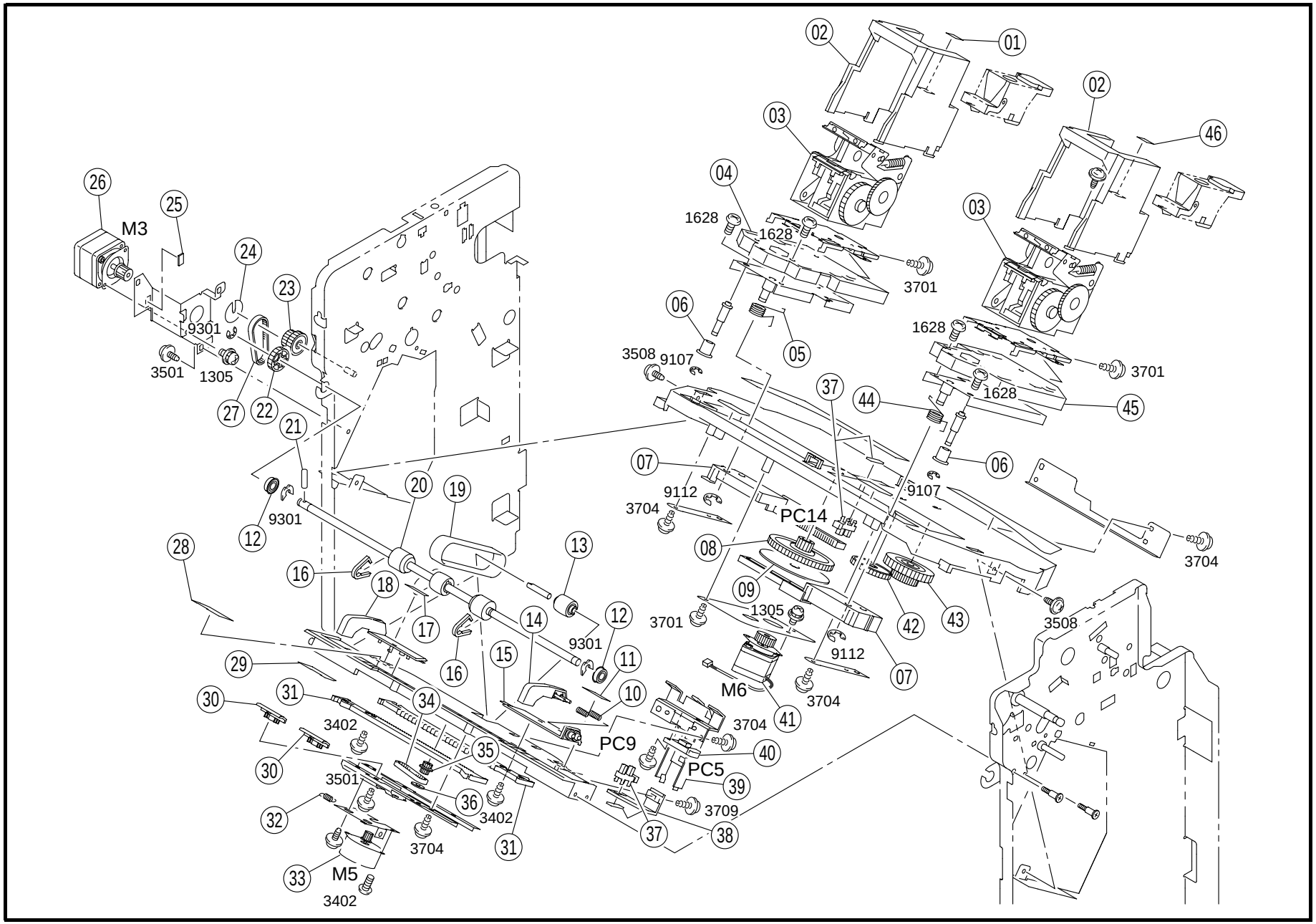
01
02
02
03
03
04
05
06
06
07
07
08
09
10
11
12
12
13
14
15
16
16
17
18
19
20
21
22
23
24
25
26
27
28
29
30
30
31
31
32
33
34
35
36
37
37
38
39
40
41
42
43
44
45
46
M3
M5
M6
PC5
PC9
PC14
1628
1628
1628
1628
3701
3701
3701
3701
3508
3508
9107
9107
9112
9112
9301
9301
3501
3501
1305
1305
3704
3704
3704
3704
3704
3402
3402
3402
3709

INDEX	PART NO.	PART NAME	REC	QTY
01	4643-7309-01	LABEL		1
02	4643-5618-01	COVER		2
03	4643-0761-01	STAPLER UNIT		2
04	4643-0759-01	BASE FRAME ASSY		1
05	4643-5604-01	TORSION SPRING		1
06	4643-5606-02	ROLL		2
07	4643-5702-02	RACK		2
08	4643-5703-01	GEAR		1
09	4643-5706-01	RING		1
10	4643-5404-02	PRESSURE SPRING		2
11	4683-5307-01	GUIDE		1
12	1300-4342-07	BALL BEARING		2
13	4643-5410-01	PULLEY		1
14	4643-5403-01	PLATE		1
15	4643-5402-02	PLATE		1
16	4643-5016-03	GUIDE		2
17	4683-5306-01	GUIDE		1
18	4643-5401-02	PLATE		1
19	4643-5408-01	BELT		1
20	4643-5001-02	ROLLER		1
21	1067-2503-01	PIN		1
22	1075-3581-01	GEAR 24T		1
23	4643-5011-01	GEAR		1
24	4643-5003-01	FLANGE		1
25	4643-4614-01	CUSHION		1
26	9314-1911-62	MOTOR EXIT (M3)		1
27	4643-5004-01	TIMING BELT		1
28	4643-5417-01	GUIDE		1
29	4643-5416-01	GUIDE		1
30	4643-5312-01	GUIDE		2
31	4643-5405-01	RACK		2
32	4643-5415-01	TENSION SPRING		1
33	9314-1911-81	MOTOR INTEGRATE (M5)		1
34	4643-5412-01	TIMING BELT		1
35	4643-5406-01	GEAR		1
36	4643-5413-01	FLANGE		1
37	4122-0901-01	PHOTO INTERRUPTER (PC9.14)		2
38	4643-5414-01	BRACKET		1
39	4643-5304-01	STOPPER		1
40	9335-1910-91	SOLID STATE SWITCH PAPER (PC5)		1
41	9314-1911-71	MOTOR STAPLER (M6)		1
42	4643-5715-01	GEAR		1
43	4643-5713-01	KNOB		1
44	4643-5605-01	TORSION SPRING		1
45	4643-0758-01	BASE FRAME ASSY		1
46	4643-7310-01	LABEL		1

INDEX	PART NO.	PART NAME	REC	QTY	SFIX

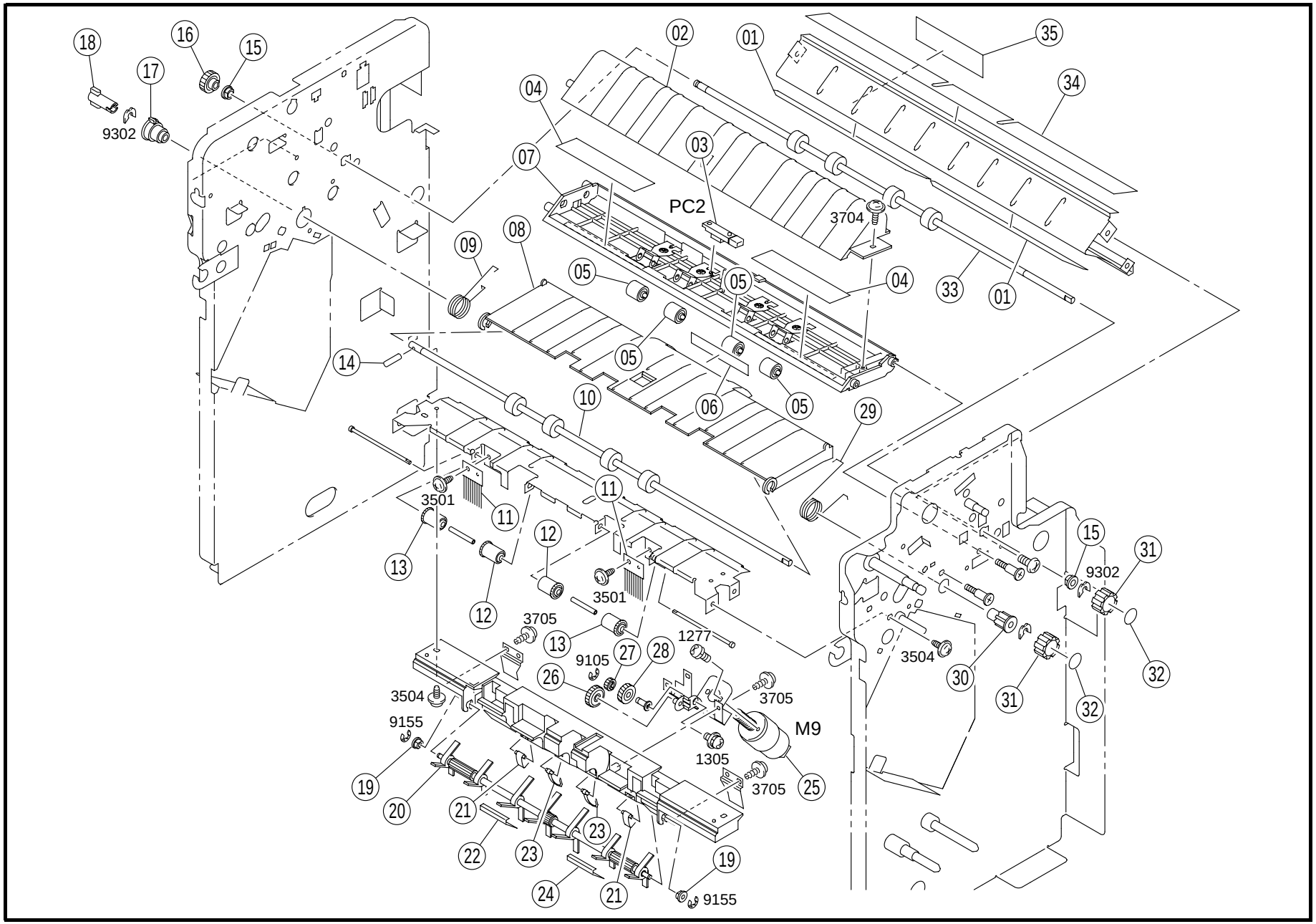
18
16
15
17
9302
02
01
35
34
04
07
03
PC2
3704
09
08
05
05
04
33
01
05
14
10
06
05
29
3501
11
11
12
13
12
3501
3705
13
27
28
1277
9105
26
3504
9155
3705
M9
1305
3705
25
19
20
21
22
23
23
24
21
19
9155
15
31
9302
3504
30
31
32
32

INDEX	PART NO.	PART NAME	REC	QTY
01	4643-3040-01	GUIDE		2
02	4643-3043-02	GUIDE		1
03	9335-1910-51	SOLID STATE SWITCH L.ROUTE (PC2)		1
04	4643-3079-01	GUIDE		2
05	4643-3031-01	ROLL		4
06	4643-7308-01	LABEL		1
07	4643-0754-01	GUIDE ASSY		1
08	4643-3001-03	GUIDE		1
09	4643-3016-01	TORSION SPRING		1
10	4643-3101-01	ROLLER		1
11	4643-5228-01	NEUTRALIZING BRUSH		2
12	4643-5237-01	ROLL		2
13	4643-5226-01	ROLL		2
14	4470-2316-01	PIN		1
15	1200-3221-07	BUSHING		2
16	4643-3108-02	GEAR		1
17	4643-3123-01	BUSHING		1
18	4643-3119-01	JOINT		1

INDEX	PART NO.	PART NAME	REC	QTY
19	1200-3201-08	BUSHING		2
20	4643-5201-01	PADDLE		1
21	4643-5222-02	GUIDE		2
22	4643-5240-01	GUIDE		1
23	4643-0753-01	GUIDE ASSY		2
24	4643-5239-01	GUIDE		1
25	4643-0752-01	MOTOR ASSY L.PADDLE (M9)		1
26	4643-5224-01	GEAR		1
27	4643-5225-01	GEAR		1
28	4643-5206-01	GEAR		1
29	4643-3015-01	TORSION SPRING		1
30	4643-3122-01	BUSHING		1
31	1274-3602-02	KNOB		2
32	4643-7306-01	LABEL		2
33	4643-3107-02	ROLLER		1
34	4643-3008-01	GUIDE		1
35	4643-3064-01	GUIDE		1

INDEX	PART NO.	PART NAME	REC	QTY	SFIX

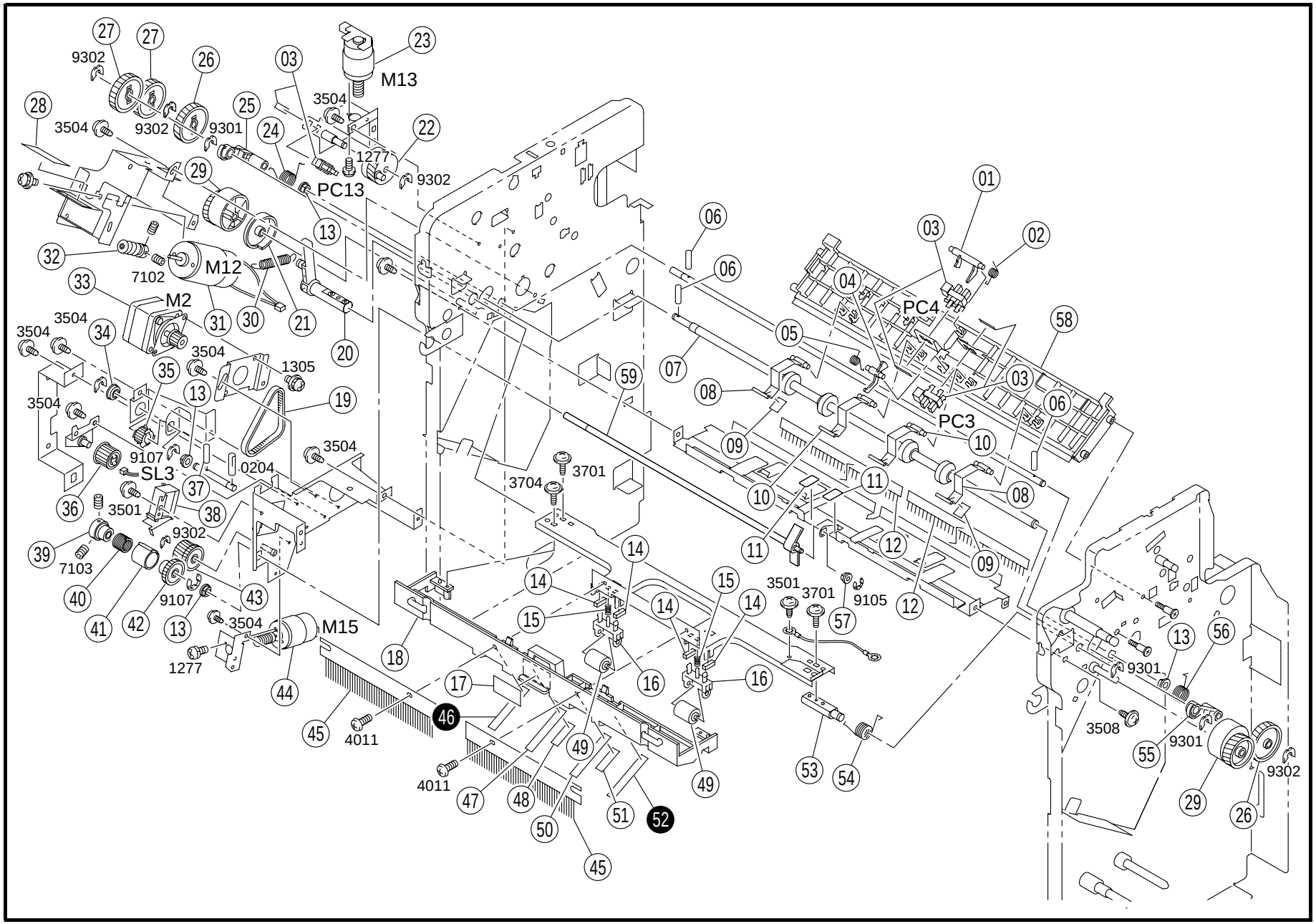
M13
PC13
M12
M2
PC4
PC3
SL3
M15
9302
3504
9301
1277
7102
1305
0204
9107
3701
3704
3501
9105
7103
4011
3508

INDEX	PART NO.	PART NAME	REC	QTY
01	4643-3013-01	ACTUATOR		1
02	4643-3014-01	TORSION SPRING		1
03	4122-0901-01	PHOTO INTERRUPTER (PC3.4.13)		3
04	4643-3020-02	ACTUATOR		1
05	4643-3037-01	TORSION SPRING		1
06	1067-2503-01	PIN		3
07	4643-3301-02	ROLLER		1
08	4643-3022-01	LEVER		2
09	4643-3065-01	GUIDE		2
10	4643-3066-02	LEVER		2
11	4643-3058-01	GUIDE		2
12	4643-3017-01	NEUTRALIZING BRUSH		2
13	1200-3221-07	BUSHING		4
14	4643-5018-01	CUSHION		4
15	4643-5014-01	PRESSURE SPRING		2
16	4643-5007-01	HOLDER		2
17	4643-7319-01	LABEL		1
18	4643-3006-03	GUIDE		1
19	4643-3104-01	TIMING BELT		1
20	4643-5009-01	LEVER		1
21	4643-3310-02	DETECTING PLATE		1
22	4643-5106-01	CAM		1
23	4643-0757-01	MOTOR ASSY EXIT ROLL (M13)		1
24	4643-3308-02	TORSION SPRING		1
25	4643-3305-02	ARM		1
26	4643-3309-01	GEAR		2
27	4643-3311-01	GEAR		2
28	4643-3407-01	COVER		1
29	4643-3315-02	CAM		2

INDEX	PART NO.	PART NAME	REC	QTY
30	4643-5010-01	TENSION SPRING		1
31	4643-0751-01	MOTOR ASSY ALIENATE (M12)		1
32	4643-3406-02	WORM		1
33	9314-1911-62	MOTOR L.ROUTE (M2)		1
34	4102-4058-01	BALL BEARING		1
35	4643-3102-01	PULLEY		1
36	4643-3312-01	PULLEY		1
37	4470-2316-01	PIN		1
38	4109-6201-02	SOLENOID U.PADDLE (SL3)		1
39	4643-5219-03	DRUM		1
40	4643-5220-01	TORSION SPRING	RP	1
41	4643-5221-01	COLLAR		1
42	4643-5208-01	GEAR		1
43	4643-5209-01	GEAR		1
44	4643-0752-01	MOTOR ASSY U.PADDLE (M15)		1
45	4643-5017-01	NEUTRALIZING BRUSH		2
47	4643-3062-02	GUIDE		1
48	4643-3070-02	GUIDE		1
49	4643-5008-01	ROLLER		2
50	4643-3077-02	GUIDE		1
51	4643-3078-02	GUIDE		1
53	4643-5006-01	SHAFT		1
54	4643-5019-01	TORSION SPRING		1
55	4643-3317-02	ARM		1
56	4643-3307-02	TORSION SPRING		1
57	1200-3201-08	BUSHING		1
58	4643-3005-01	GUIDE		1
59	4643-5210-03	PADDLE		1

INDEX	PART NO.	PART NAME	REC	QTY	SFIX
46	4643-3062-02	GUIDE		1	612, 613, 614
52	4643-3077-02	GUIDE		1	612, 613, 614

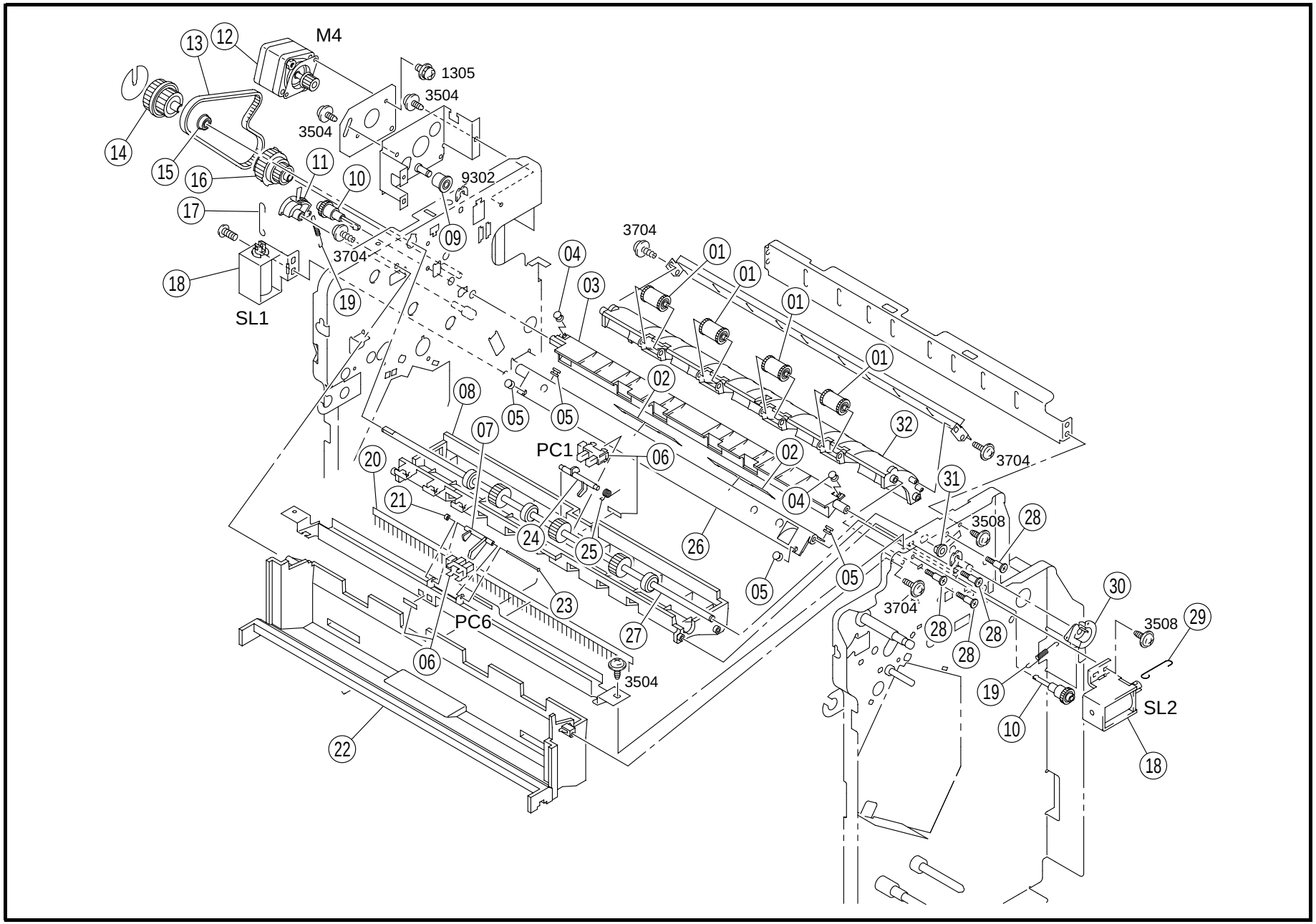
M4
1305
3504
3504
9302
3704
3704
SL1
PC1
PC6
3704
3508
3704
3508
SL2
3504

INDEX	PART NO.	PART NAME	REC	QTY
01	4643-3059-01	ROLL		4
02	4643-3218-02	GUIDE		2
03	4643-3201-01	PAWL		1
04	4643-3216-01	BUSHING		2
05	4643-3215-01	BUSHING		4
06	4122-0901-01	PHOTO INTERRUPTER TRAY (PC1.6)		2
07	4643-3046-01	ACTUATOR		1
08	4643-3029-02	GUIDE		1
09	4469-2447-01	PULLEY		1
10	4643-3208-01	GEAR		2
11	4643-3204-01	GEAR		1
12	9314-1911-62	MOTOR U.ROUTE (M4)		1
13	4643-3113-01	TIMING BELT		1
14	4643-3110-01	GEAR		1
15	4102-4058-01	BALL BEARING		1
16	4643-3109-02	GEAR		1
17	4643-3214-02	HOOK		1
18	4611-6201-01	SOLENOID ROUTE (SL1.2)		2
19	4643-3217-01	TENSION SPRING		2
20	4643-3030-01	NEUTRALIZING BRUSH		1
21	1200-2105-06	RETAINING RING		1
22	4643-4203-01	PLATE		1
23	1200-5213-04	SHAFT		1
24	4643-3034-01	ACTUATOR		1
25	4643-3018-01	TORSION SPRING		1
26	4643-3202-02	PAWL		1
27	4643-3106-02	ROLLER		1
28	4643-3007-01	SHOULDER SCREW		4
29	4643-3212-01	HOOK		1
30	4643-3211-01	GEAR		1
31	1200-3221-07	BUSHING		1
32	4643-0755-01	GUIDE ASSY		1

INDEX	PART NO.	PART NAME	REC	QTY	SFIX

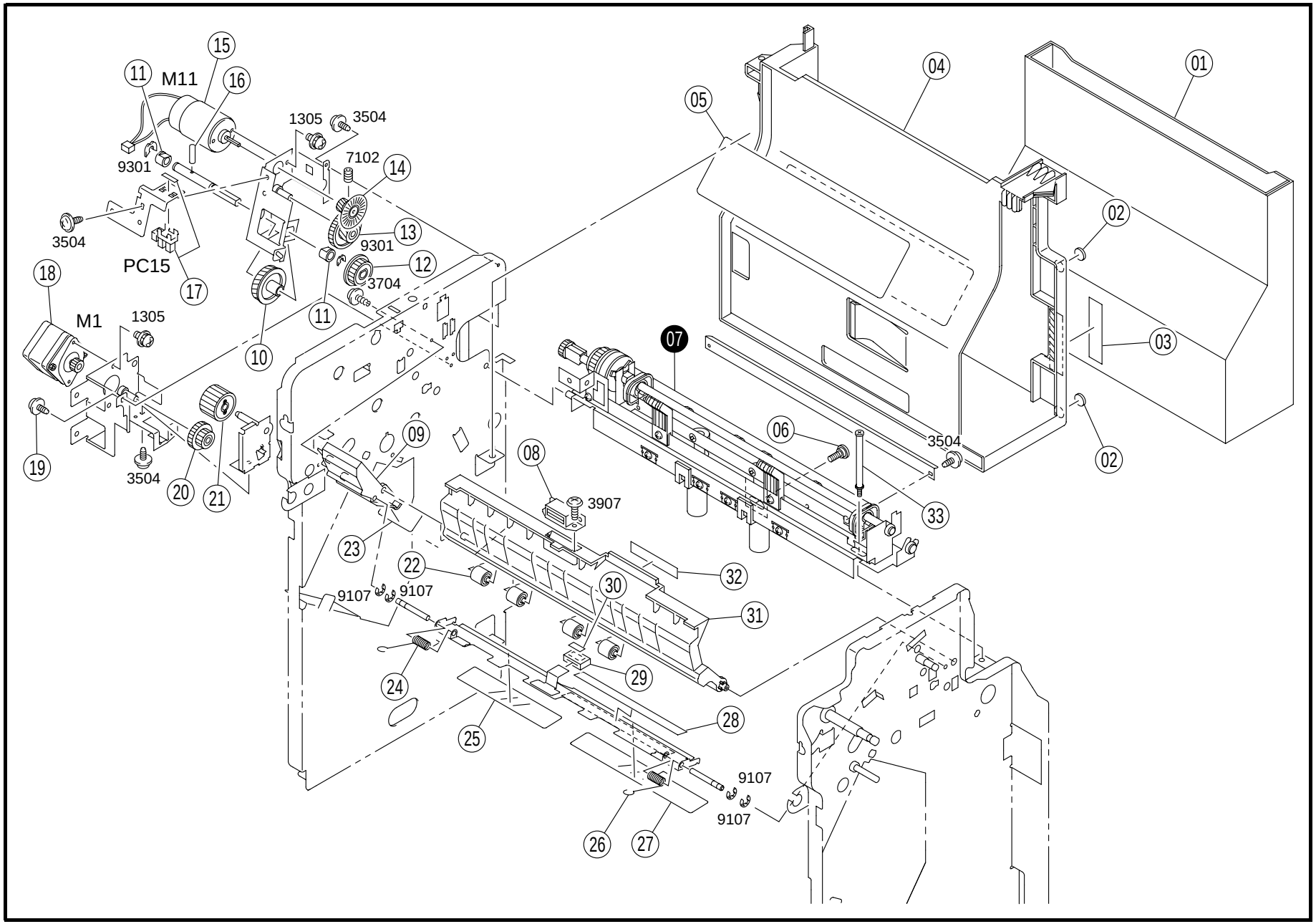
M11
PC15
M1
1305
3504
7102
9301
3704
3907
9107
01
02
03
04
05
06
07
08
09
10
11
12
13
14
15
16
17
18
19
20
21
22
23
24
25
26
27
28
29
30
31
32
33

INDEX	PART NO.	PART NAME	REC	QTY
01	4643-4102-01	BOTTLE		1
02	4470-1032-01	CUSHION		2
03	4643-7307-01	LABEL		1
04	4643-4101-02	DOOR		1
05	4643-7303-01	LABEL		1
06	4643-2052-01	SHOULDER SCREW		1
08	4426-2607-01	MAGNET CATCH		1
09	4643-3024-03	GUIDE		1
10	4643-4011-01	GEAR		1
11	1200-3134-16	BUSHING		2
12	4643-4009-01	GEAR		1
13	4643-4018-01	GEAR		1
14	4643-4017-03	GEAR		1
15	4643-0751-01	MOTOR ASSY PUNCH (M11)		1
16	1067-2503-01	PIN		1
17	4640-0902-01	PHOTO INTERRUPTER PUNCH (PC15)		1
18	9314-1911-71	MOTOR CARRT IN (M1)		1
19	4154-3804-01	SCREW		2
20	4643-4027-01	GEAR		1
21	4643-4026-01	GEAR		1
22	4643-3031-01	ROLL		4
23	4643-3023-01	GUIDE		1
24	4643-3075-03	TORSION SPRING		1
25	4643-3027-02	GUIDE		1
26	4643-3074-03	TORSION SPRING		1
27	4643-3076-02	GUIDE		1
28	4643-7401-01	LABEL		1
29	4643-3073-03	HANDLE		1
30	4643-7304-02	LABEL		1
31	4643-0756-01	GUIDE ASSY		1
32	4643-7305-02	LABEL		1
33	4643-4046-01	SHOULDER SCREW		1

INDEX	PART NO.	PART NAME	REC	QTY	SFIX
07	4643-4001-02	PUNCH UNIT		1	612
07	4643-4002-02	PUNCH UNIT		1	611, 613
07	4643-4003-02	PUNCH UNIT		1	614

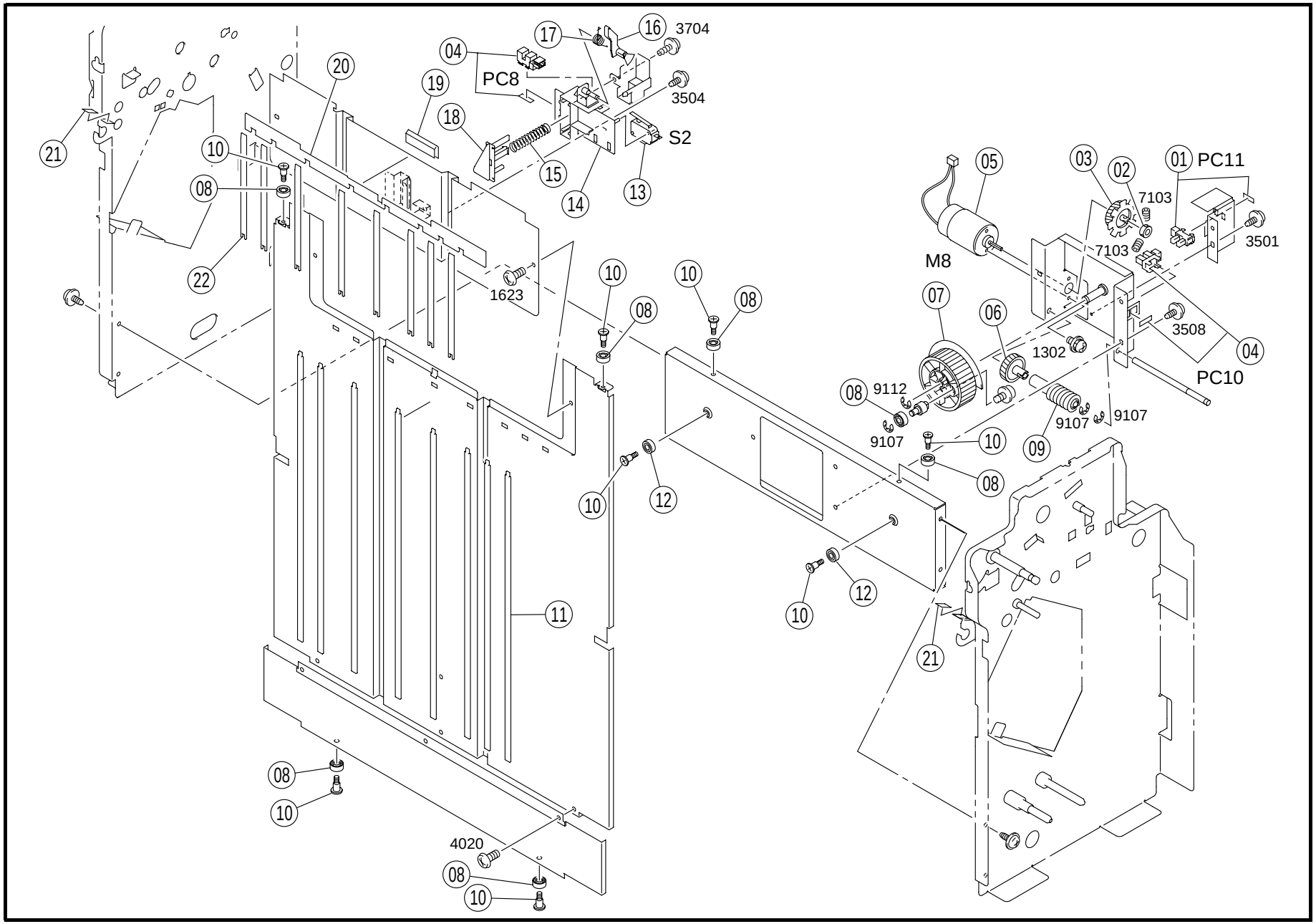
17
16
3704
04
PC8
3504
20
19
18
S2
21
10
15
14
13
08
22
1623
10
10
08
08
05
03
02
01
PC11
7103
7103
3501
M8
07
06
3508
1302
04
PC10
08
9112
9107
9107
9107
10
09
08
10
12
10
12
10
21
11
08
10
4020
08
10

INDEX	PART NO.	PART NAME	REC	QTY
01	4640-0902-01	PHOTO INTERRUPTER SHIFT (PC11)		1
02	4643-4711-01	COLLAR		1
03	4643-4703-01	GEAR		1
04	4122-0901-01	PHOTO INTERRUPTER (PC8.10)		2
05	4643-0751-01	MOTOR ASSY SHIFT (M8)		1
06	4643-4708-01	GEAR		1
07	4643-4709-02	GEAR		1
08	4643-4604-01	ROLL		7
09	4643-4710-01	WORM		1
10	4643-4605-01	SHOULDER SCREW		8
11	4643-4616-01	GUIDE		8
12	1300-4322-01	BALL BEARING		2
13	9331-2310-11	MICROSWITCH UPPER LIM (S2)		1
14	4643-4809-03	HOLDER		1
15	4643-4808-01	PRESSURE SPRING		1
16	4643-4810-03	ACTUATOR		1
17	4643-4811-01	TORSION SPRING		1
18	4643-4807-01	ACTUATOR		1
19	4643-4623-01	GUIDE		1
20	4643-4618-01	GUIDE		1
21	4643-2026-01	STOPPER		2
22	4643-4617-02	GUIDE		8

INDEX	PART NO.	PART NAME	REC	QTY	SFIX

01 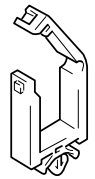	08 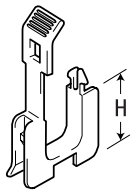						
02 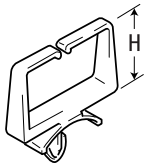	09 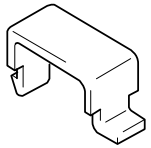						
03 - 05 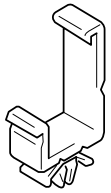	10 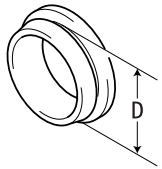						
06 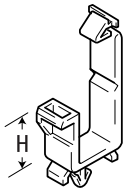	11 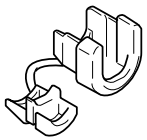						
07 							

INDEX	PART NO.	PART NAME	REC	QTY	INDEX	PART NO.	PART NAME	REC	QTY
01	9384-1310-11	WIRING SADDLE 5.2H		2					
02	9384-1310-81	WIRING SADDLE 6.4H		5					
03	9384-1310-91	WIRING SADDLE 18.5H		1					
04	9384-1311-01	WIRING SADDLE 27H		2					
05	9384-1311-21	WIRING SADDLE 16.8H		6					
06	9384-1921-01	WIRING SADDLE 14.4H		12					
07	9384-2010-21	EDGE COVER 8.5H		2					
08	9384-2010-31	EDGE COVER 15.4H		1					
09	1139-5558-01	CORD CLAMP		1					
10	0721-4203-12	COLLAR 17D		1					
11	9384-1621-61	CORD BUSHING		1					

INDEX	PART NO.	PART NAME	REC	QTY	SFIX

INDEX	PART NO.	PART NAME	ILLUST
0204	9754-2012-08	SPRING ROLL PIN	
0501 0508	9752-3016-50 9752-2010-50	PIN	
1277	9644-2606-13	SCREW	
1302 1305 1308 1318 1320 1321	9646-0305-13 9646-0306-13 9646-0308-13 9646-0408-13 9646-0410-13 9646-0412-13	SCREW	
1623 1628	9654-0408-01 9654-0410-01	SCREW	
3305	9732-0308-13	TAPPING SCREW	
3402 3407	9733-0306-13 9733-0314-13	TAPPING SCREW	
3501 3504 3508 3509 3538	9735-0306-13 9735-0308-13 9735-0408-13 9735-0410-13 9735-0408-14	TAPPING SCREW	
3701 3704 3705 3709 3712 3727	9739-0408-13 9739-0308-13 9739-0306-13 9739-0310-13 9739-0406-13 9739-0308-14	TAPPING SCREW	

INDEX	PART NO.	PART NAME	ILLUST
3907 3920	9742-0308-13 9742-0408-14	TAPPING SCREW	
4005 4009 4011 4012 4020 4026	9743-0408-13 9743-0308-01 9743-0308-13 9743-0306-13 9743-0408-14 9743-0410-13	TAPPING SCREW	
6110	9660-0800-13	NUT	
7102 7103	9684-0304-08 9684-0306-08	SET SCREW	
9105 9107 9112 9124 9125 9126 9155	9721-0300-01 9721-0400-01 9721-0600-01 9721-0300-13 9721-0400-13 9721-0600-13 9721-0250-13	RETAINING RING	
9301 9302	1066-1151-01 4425-3001-01	RETAINING RING	

INDEX	PART NO.	PART NAME	ILLUST

PART NO.	FIG.	INDEX	QTY		PART NO.	FIG.	INDEX	QTY		PART NO.	FIG.	INDEX	QTY		PART NO.	FIG.	INDEX	QTY	
0721-4203-12	11	10	1		4643-1010-04	01	17	1		4643-3122-01	06	30	1		4643-4711-01	10	02	1	
1053-3103-01	01	05	2		4643-1011-02	01	16	1		4643-3123-01	06	17	1		4643-4801-02	04	09	1	
1067-2503-01	05	21	1		4643-1015-03	02	03	1		4643-3201-01	08	03	1		4643-4802-01	04	10	1	
1067-2503-01	07	06	3		4643-1020-02	01	04	1		4643-3202-02	08	26	1		4643-4805-01	04	15	1	
1067-2503-01	09	16	1		4643-2008-01	02	07	2		4643-3204-01	08	11	1		4643-4806-01	04	17	2	
1075-3581-01	05	22	1		4643-2009-02	01	15	2		4643-3208-01	08	10	2		4643-4807-01	10	18	1	
1100-1340-09	02	02	2		4643-2026-01	10	21	2		4643-3211-01	08	30	1		4643-4808-01	10	15	1	
1100-1340-09	04	05	1		4643-2052-01	09	06	1		4643-3212-01	08	29	1		4643-4809-03	10	14	1	
1139-5558-01	11	09	1		4643-2101-02	02	04	2		4643-3214-02	08	17	1		4643-4810-03	10	16	1	
1200-1342-03	04	31	1		4643-2103-01	03	08	2		4643-3215-01	08	05	4		4643-4811-01	10	17	1	
1200-2105-06	08	21	1		4643-2105-01	03	09	2		4643-3216-01	08	04	2		4643-5001-02	05	20	1	
1200-3134-16	09	11	2		4643-2112-01	03	02	1		4643-3217-01	08	19	2		4643-5003-01	05	24	1	
1200-3201-08	06	19	2		4643-2114-01	02	10	1		4643-3218-02	08	02	2		4643-5004-01	05	27	1	
1200-3201-08	07	57	1		4643-2115-01	02	09	1		4643-3301-02	07	07	1		4643-5006-01	07	53	1	
1200-3221-07	06	15	2		4643-2116-04	02	05	2		4643-3305-02	07	25	1		4643-5007-01	07	16	2	
1200-3221-07	07	13	4		4643-2119-02	03	04	1		4643-3307-02	07	56	1		4643-5008-01	07	49	2	
1200-3221-07	08	31	1		4643-2130-01	02	06	1		4643-3308-02	07	24	1		4643-5009-01	07	20	1	
1200-5213-04	08	23	1		4643-2131-02	03	07	1		4643-3309-01	07	26	2		4643-5010-01	07	30	1	
1274-3602-02	06	31	2		4643-2132-01	03	05	1		4643-3310-02	07	21	1		4643-5011-01	05	23	1	
1300-4322-01	04	20	4		4643-3001-03	06	08	1		4643-3311-01	07	27	2		4643-5014-01	07	15	2	
1300-4322-01	10	12	2		4643-3005-01	07	58	1		4643-3312-01	07	36	1		4643-5016-03	05	16	2	
1300-4342-07	04	08	2		4643-3006-03	07	18	1		4643-3315-02	07	29	2		4643-5017-01	07	45	2	
1300-4342-07	05	12	2		4643-3007-01	08	28	4		4643-3317-02	07	55	1		4643-5018-01	07	14	4	
4102-4058-01	07	34	1		4643-3008-01	06	34	1		4643-3406-02	07	32	1		4643-5019-01	07	54	1	
4102-4058-01	08	15	1		4643-3013-01	07	01	1		4643-3407-01	07	28	1		4643-5106-01	07	22	1	
4109-6201-02	07	38	1		4643-3014-01	07	02	1		4643-4001-02	09	07	1		4643-5201-01	06	20	1	
4122-0901-01	03	06	3		4643-3015-01	06	29	1		4643-4002-02	09	07	1		4643-5206-01	06	28	1	
4122-0901-01	04	12	1		4643-3016-01	06	09	1		4643-4003-02	09	07	1		4643-5208-01	07	42	1	
4122-0901-01	05	37	2		4643-3017-01	07	12	2		4643-4009-01	09	12	1		4643-5209-01	07	43	1	
4122-0901-01	07	03	3		4643-3018-01	08	25	1		4643-4011-01	09	10	1		4643-5210-03	07	59	1	
4122-0901-01	08	06	2		4643-3020-02	07	04	1		4643-4017-03	09	14	1		4643-5219-03	07	39	1	
4122-0901-01	10	04	2		4643-3022-01	07	08	2		4643-4018-01	09	13	1		4643-5220-01	07	40	1	
4154-3804-01	03	01	12		4643-3023-01	09	23	1		4643-4026-01	09	21	1		4643-5221-01	07	41	1	
4154-3804-01	09	19	2		4643-3024-03	09	09	1		4643-4027-01	09	20	1		4643-5222-02	06	21	2	
4426-2607-01	09	08	1		4643-3027-02	09	25	1		4643-4046-01	09	33	1		4643-5224-01	06	26	1	
4469-2447-01	08	09	1		4643-3029-02	08	08	1		4643-4101-02	09	04	1		4643-5225-01	06	27	1	
4470-1032-01	09	02	2		4643-3030-01	08	20	1		4643-4102-01	09	01	1		4643-5226-01	06	13	2	
4470-2316-01	06	14	1		4643-3031-01	06	05	4		4643-4201-02	01	12	1		4643-5228-01	06	11	2	
4470-2316-01	07	37	1		4643-3031-01	09	22	4		4643-4202-02	01	09	1		4643-5237-01	06	12	2	
4493-2414-02	02	08	2		4643-3034-01	08	24	1		4643-4203-01	08	22	1		4643-5239-01	06	24	1	
4611-4609-01	04	32	1		4643-3037-01	07	05	1		4643-4301-03	01	11	1		4643-5240-01	06	22	1	
4611-4611-01	04	33	1		4643-3040-01	06	01	2		4643-4302-01	01	10	1		4643-5304-01	05	39	1	
4611-4612-01	04	26	1		4643-3043-02	06	02	1		4643-4401-01	04	14	2		4643-5312-01	05	30	2	
4611-6053-01	04	23	1		4643-3046-01	08	07	1		4643-4402-02	04	07	2		4643-5401-02	05	18	1	
4611-6054-01	04	16	1		4643-3058-01	07	11	2		4643-4404-01	04	03	3		4643-5402-02	05	15	1	
4611-6201-01	08	18	2		4643-3059-01	08	01	4		4643-4411-01	04	01	2		4643-5403-01	05	14	1	
4640-0902-01	09	17	1		4643-3062-02	07	46	1		4643-4412-01	04	13	3		4643-5404-02	05	10	2	
4640-0902-01	10	01	1		4643-3062-02	07	47	1		4643-4413-01	04	22	2		4643-5405-01	05	31	2	
4643-0101-03	03	10	1		4643-3064-01	06	35	1		4643-4505-01	04	27	1		4643-5406-01	05	35	1	
4643-0751-01	04	28	1		4643-3065-01	07	09	2		4643-4510-01	04	29	1		4643-5408-01	05	19	1	
4643-0751-01	07	31	1		4643-3066-02	07	10	2		4643-4513-03	04	30	1		4643-5410-01	05	13	1	
4643-0751-01	09	15	1		4643-3070-02	07	48	1		4643-4515-01	04	24	1		4643-5412-01	05	34	1	
4643-0751-01	10	05	1		4643-3073-03	09	29	1		4643-4516-02	04	06	1		4643-5413-01	05	36	1	
4643-0752-01	06	25	1		4643-3074-03	09	26	1		4643-4521-01	04	02	1		4643-5414-01	05	38	1	
4643-0752-01	07	44	1		4643-3075-03	09	24	1		4643-4525-01	04	04	1		4643-5415-01	05	32	1	
4643-0753-01	06	23	2		4643-3076-02	09	27	1		4643-4527-01	04	25	1		4643-5416-01	05	29	1	
4643-0754-01	06	07	1		4643-3077-02	07	50	1		4643-4604-01	04	19	2		4643-5417-01	05	28	1	
4643-0755-01	08	32	1		4643-3077-02	07	52	1		4643-4604-01	10	08	7		4643-5604-01	05	05	1	
4643-0756-01	09	31	1		4643-3078-02	07	51	1		4643-4605-01	04	21	4		4643-5605-01	05	44	1	
4643-0757-01	07	23	1		4643-3079-01	06	04	2		4643-4605-01	10	10	8		4643-5606-02	05	06	2	
4643-0758-01	05	45	1		4643-3101-01	06	10	1		4643-4614-01	02	01	3		4643-5618-01	05	02	2	
4643-0759-01	05	04	1		4643-3102-01	07	35	1		4643-4614-01	05	25	1		4643-5702-02	05	07	2	
4643-0760-01	04	18	4		4643-3104-01	07	19	1		4643-4616-01	10	11	8		4643-5703-01	05	08	1	
4643-0761-01	05	03	2		4643-3106-02	08	27	1		4643-4617-02	10	22	8		4643-5706-01	05	09	1	
4643-1001-03	01	01	1		4643-3107-02	06	33	1		4643-4618-01	10	20	1		4643-5713-01	05	43	1	
4643-1002-03	01	08	1		4643-3108-02	06	16	1		4643-4623-01	10	19	1		4643-5715-01	05	42	1	
4643-1003-05	01	13	1		4643-3109-02	08	16	1		4643-4703-01	10	03	1		4643-6601-01	03	11	1	
4643-1004-05	01	02	1		4643-3110-01	08	14	1		4643-4708-01	10	06	1		4643-7301-01	01	03	1	
4643-1005-02	01	06	1		4643-3113-01	08	13	1		4643-4709-02	10	07	1		4643-7302-01	01	18	1	
4643-1009-02	01	07	4		4643-3119-01	06	18	1		4643-4710-01	10	09	1		4643-7303-01	09	05	1	

PART NO.	FIG.	INDEX	QTY		PART NO.	FIG.	INDEX	QTY		PART NO.	FIG.	INDEX	QTY		PART NO.	FIG.	INDEX	QTY	
4643-7304-02	09	30	1																
4643-7305-02	09	32	1																
4643-7306-01	06	32	2																
4643-7307-01	09	03	1																
4643-7308-01	06	06	1																
4643-7309-01	05	01	1																
4643-7310-01	05	46	1																
4643-7311-01	01	14	1																
4643-7312-01	01	19	1																
4643-7313-01	01	19	1																
4643-7314-01	01	19	1																
4643-7315-01	01	20	1																
4643-7316-01	01	20	1																
4643-7317-01	01	20	1																
4643-7318-01	01	14	1																
4643-7319-01	07	17	1																
4643-7401-01	09	28	1																
4683-5306-01	05	17	1																
4683-5307-01	05	11	1																
9314-1911-62	05	26	1																
9314-1911-62	07	33	1																
9314-1911-62	08	12	1																
9314-1911-71	05	41	1																
9314-1911-71	09	18	1																
9314-1911-81	05	33	1																
9331-2310-11	04	11	1																
9331-2310-11	10	13	1																
9331-2710-11	03	03	1																
9335-1910-51	06	03	1																
9335-1910-91	05	40	1																
9384-1310-11	11	01	2																
9384-1310-81	11	02	5																
9384-1310-91	11	03	1																
9384-1311-01	11	04	2																
9384-1311-21	11	05	6																
9384-1621-61	11	11	1																
9384-1921-01	11	06	12																
9384-2010-21	11	07	2																
9384-2010-31	11	08	1																



Copyright
2000 MINOLTA Co., Ltd.
Printed in Japan

4643-7995-21 00082830