FN-106

PARTS MANUAL

MINOLTA

SFIX CHART

SFIX No.	COUNTRY	VOLTAGE	FREQUENCY (Hz)	PAPER SIZE	SFIX No.	COUNTRY	VOLTAGE	FREQUENCY (Hz)	PAPER SIZE
611	JAPAN	-	-	METRIC	614	EUROPE S ARABIA BRA-ZIL CURACAO TAIWAN S AFRICA AUSTRALIA HONG KONG L AMERICA KOREA	-	-	INCH/METRIC
612	USA/CANADA PHILIP-PINE	-	-	INCH					

CONTENTS

1. HOUSING ••••••

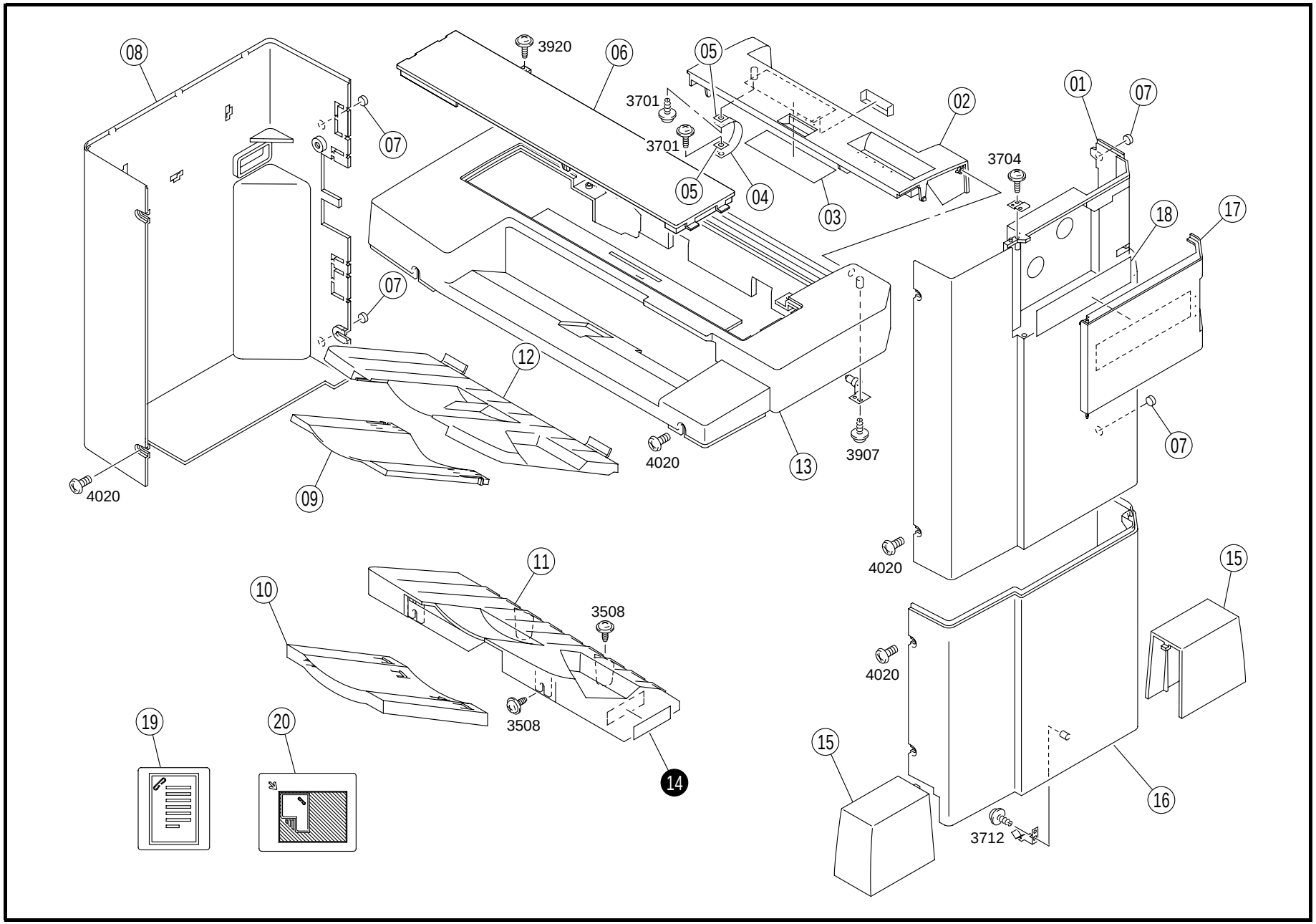
08
3920
06
05
01
07
3701
3701
02
3704
05
04
03
18
17
07
07
12
4020
13
3907
07
4020
09
4020
11
15
10
3508
4020
3508
15
19
20
14
16
3712

INDEX	PART NO.	PART NAME	REC	QTY
01	4643-1001-03	FRONT COVER		1
02	4643-1004-05	COVER		1
03	4643-7301-01	LABEL		1
04	4643-1020-02	BAND		1
05	1053-3103-01	PLATE		2
06	4643-1005-02	TOP COVER		1
07	4643-1009-02	STOPPER		4
08	4643-1002-03	REAR COVER		1
09	4643-4202-02	TRAY		1
10	4643-4302-01	TRAY		1
11	4643-4301-03	TRAY		1
12	4643-4201-02	TRAY		1
13	4643-1003-05	TOP COVER		1
15	4643-2009-02	GUIDE		2
16	4643-1011-02	FRONT COVER		1
17	4643-1010-04	FRONT COVER		1
18	4643-7302-01	LABEL		1
19	4644-7312-01	LABEL		1
20	4644-7315-01	LABEL		1

INDEX	PART NO.	PART NAME	REC	QTY	SFIX
14	4643-7311-01	LABEL		1	611
14	4643-7318-01	LABEL		1	612, 614

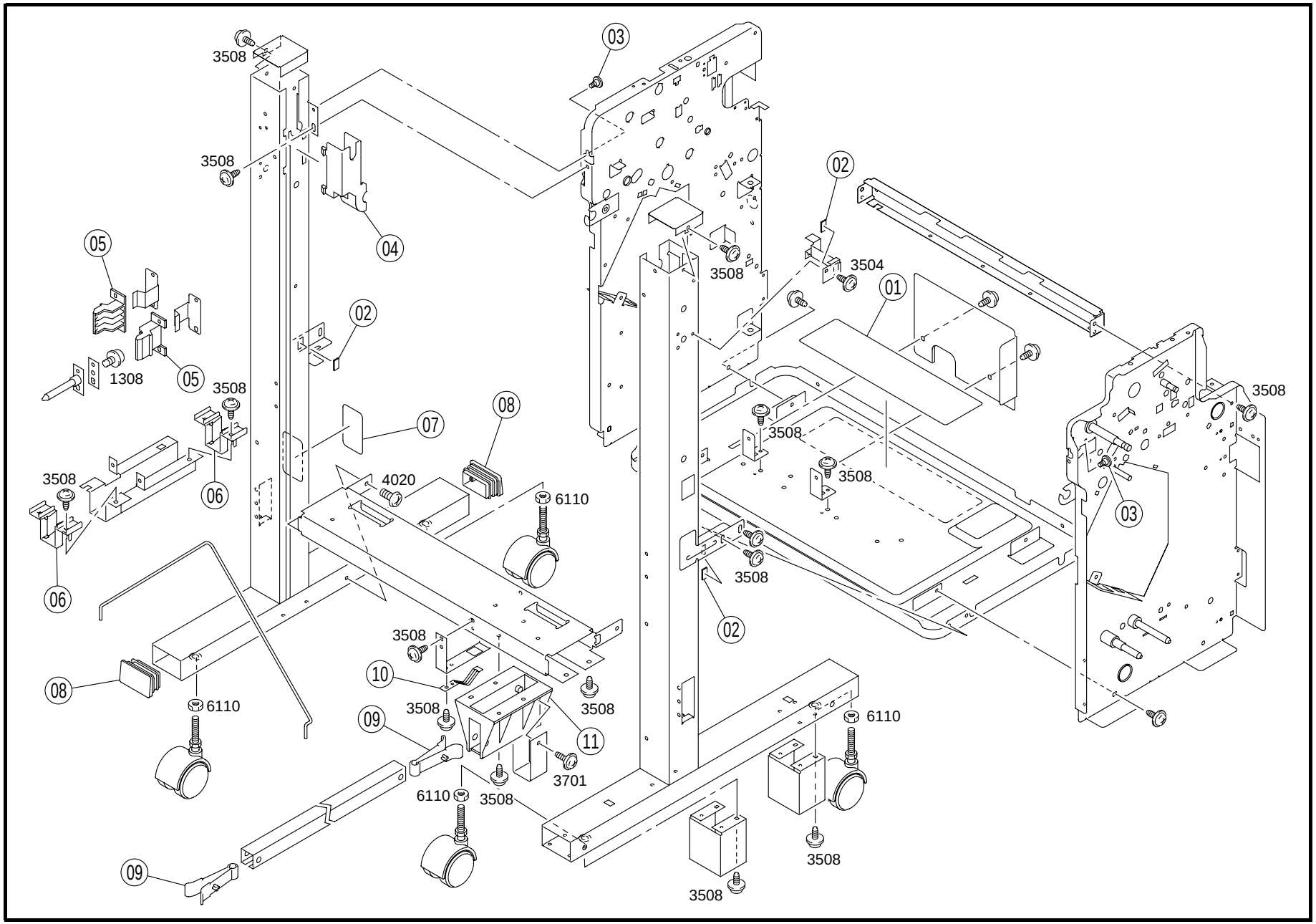
3508
3508
03
02
04
05
3504
01
3508
02
1308
05
3508
08
07
3508
3508
3508
4020
6110
06
03
06
3508
02
3508
10
08
6110
3508
3508
09
11
6110
3701
6110
3508
3508
09
3508

INDEX	PART NO.	PART NAME	REC	QTY	INDEX	PART NO.	PART NAME	REC	QTY
01	4644-7303-01	LABEL		1					
02	4643-4614-01	CUSHION		3					
03	1100-1340-09	SHOULDER SCREW		2					
04	4643-1015-03	COVER		1					
05	4643-2101-02	PAWL		2					
06	4643-2116-04	GUIDE		2					
07	4643-2130-01	FILM		1					
08	4643-2008-01	CAP		2					
09	4493-2414-02	STOPPER		2					
10	4643-2115-01	PLATE SPRING		1					
11	4643-2114-01	BRACKET		1					

INDEX	PART NO.	PART NAME	REC	QTY	SFIX

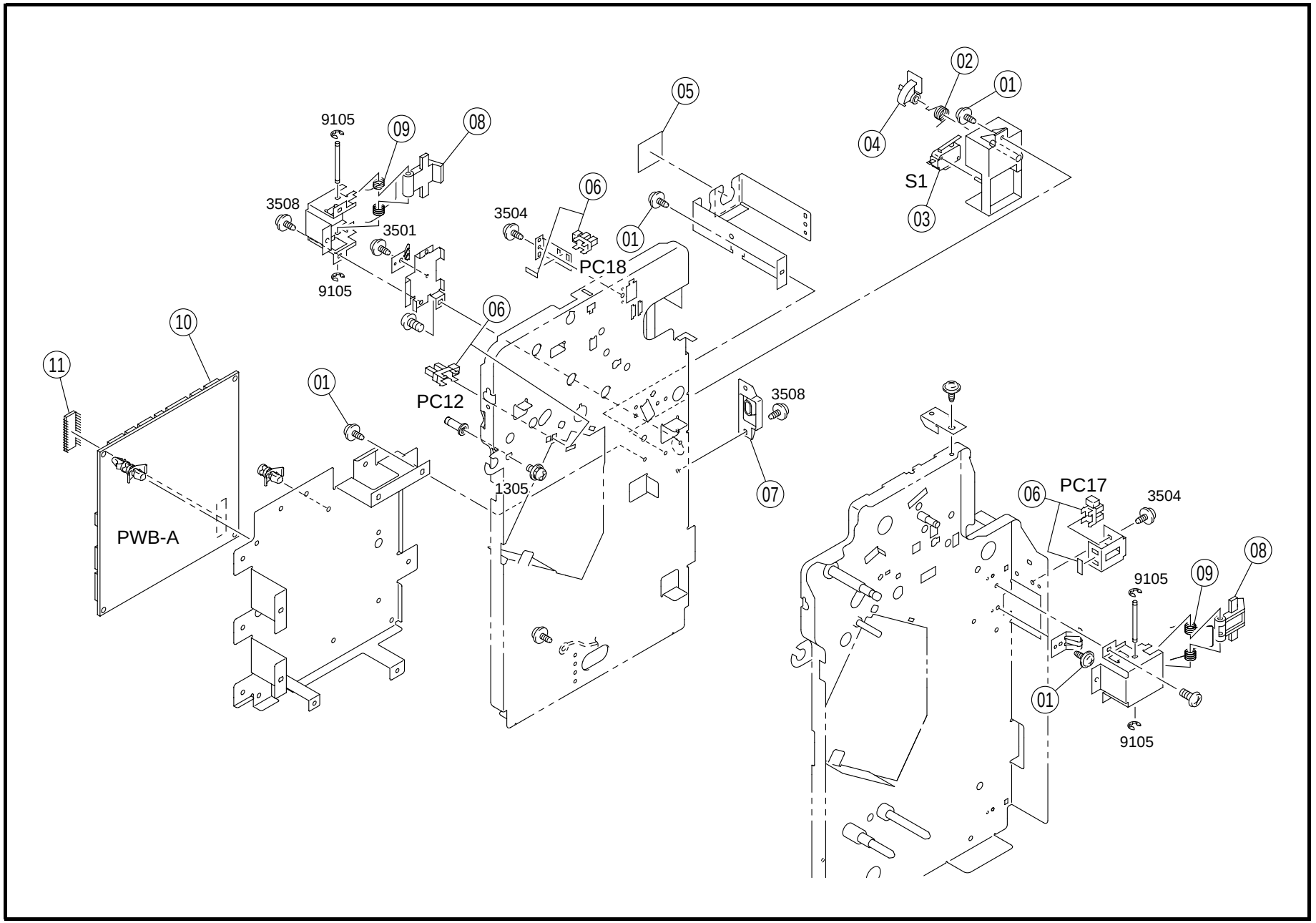
02
01
04
S1
03
05
9105
09
08
3508
3501
9105
3504
06
01
PC18
06
10
11
01
PC12
3508
07
1305
PWB-A
06
PC17
3504
9105
09
08
01
9105

INDEX	PART NO.	PART NAME	REC	QTY
01	4154-3804-01	SCREW		10
02	4643-2112-01	TORSION SPRING		1
03	9331-2710-11	MICRO SWITCH SET (S1)		1
04	4643-2119-02	ACTUATOR		1
05	4643-2132-01	FILM		1
06	4122-0901-01	PHOTO INTERRUPTER (PC12.17.18)		3
07	4643-2131-02	GUIDE		1
08	4643-2103-01	CATCH		2
09	4643-2105-01	TORSION SPRING		2
10	4644-0101-02	PWB ASSY CONTROL (PWB-A)	RP	1
11	4643-6601-01	IC (IC3)		1

INDEX	PART NO.	PART NAME	REC	QTY	SFIX

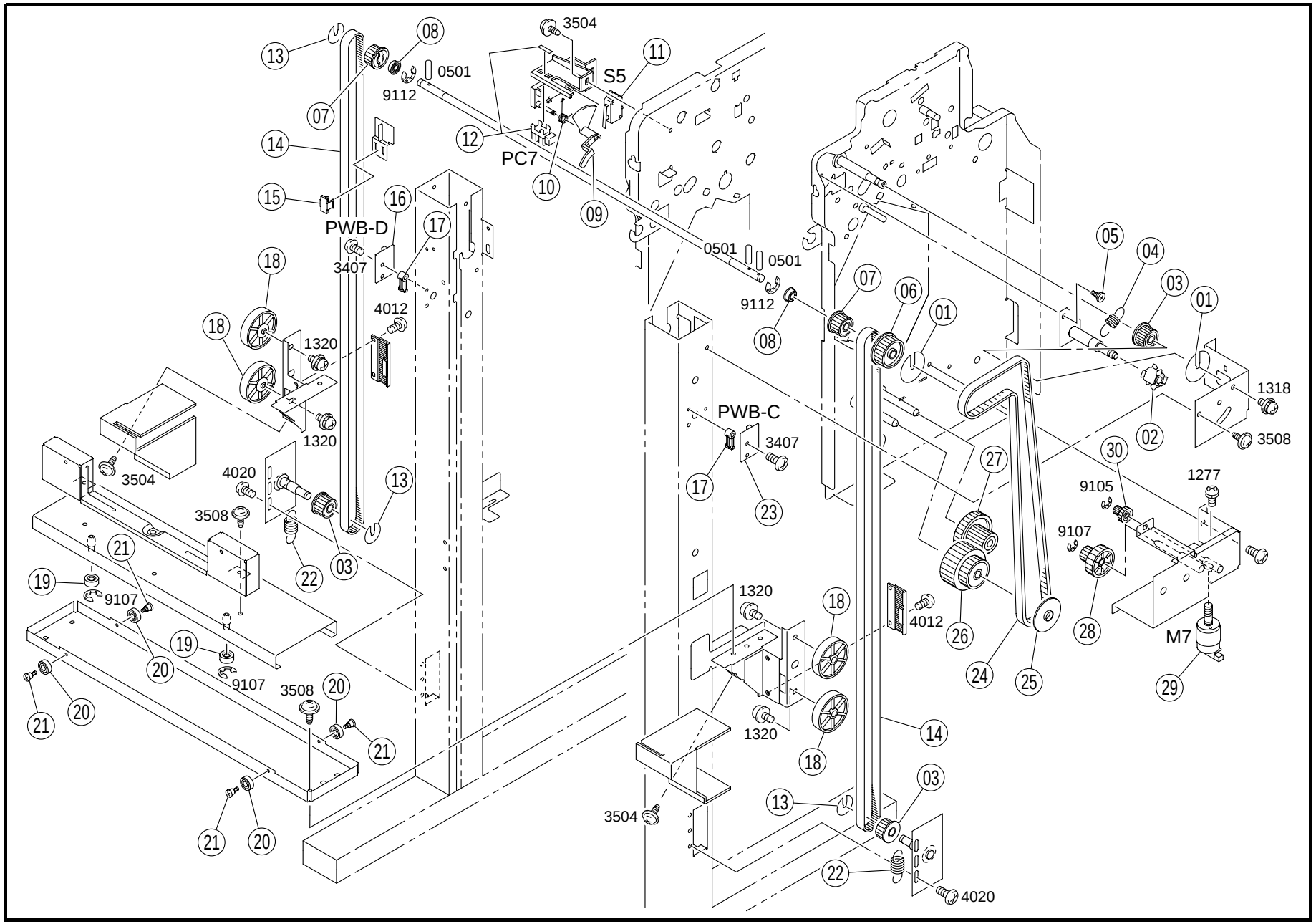
3504
S5
0501
9112
PC7
PWB-D
3407
4012
1320
1320
3504
4020
3508
9107
9107
3508
0501
0501
9112
PWB-C
3407
1320
1320
4012
3504
4020
1318
3508
1277
9105
9107
M7

INDEX	PART NO.	PART NAME	REC	QTY
01	4643-4411-01	FLANGE		2
02	4643-4521-01	PULLEY		1
03	4643-4404-01	PULLEY		3
04	4643-4525-01	TENSION SPRING		1
05	1100-1340-09	SHOULDER SCREW		1
06	4643-4516-02	PULLEY		1
07	4643-4402-02	PULLEY		2
08	1300-4342-07	BALL BEARING		2
09	4643-4801-02	ACTUATOR		1
10	4643-4802-01	TORSION SPRING		1
11	9331-2310-11	MICROSWITCH LOWER LIM (S5)		1
12	4122-0901-01	PHOTO INTERRUPTER LOWER LIM (PC7)		1
13	4643-4412-01	FLANGE		3
14	4643-4401-01	TIMING BELT		2
15	4643-4805-01	HOLDER		1
16	4611-6054-01	PW BOARD (PWB-D)		1
17	4643-4806-01	GUIDE		2
18	4643-0760-01	ROLL ASSY		4
19	4643-4604-01	ROLL		2
20	1300-4322-01	BALL BEARING		4
21	4643-4605-01	SHOULDER SCREW		4
22	4643-4413-01	TENSION SPRING		2
23	4611-6053-01	PW BOARD (PWB-C)		1
24	4643-4515-01	TIMING BELT		1
25	4643-4527-01	FLANGE		1
26	4644-4531-01	GEAR		1
27	4644-4532-01	GEAR		1
28	4644-4533-01	GEAR		1
29	4644-0751-01	MOTOR ASSY ELEVATOR (M7)		1
30	4470-4191-01	GEAR		1

INDEX	PART NO.	PART NAME	REC	QTY	SFIX

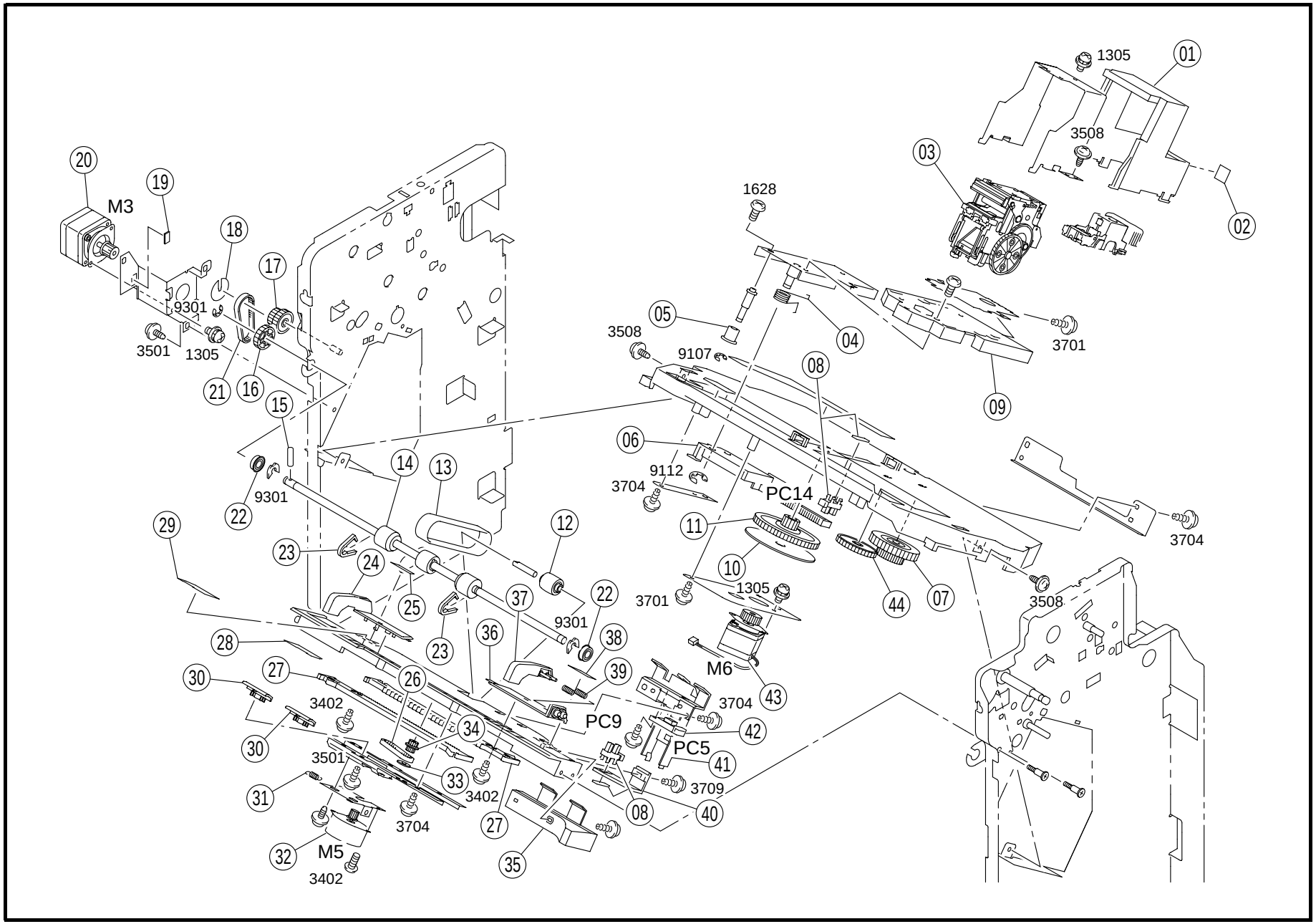
1305
01
3508
03
02
1628
20
19
M3
18
17
9301
3501
1305
21
16
15
05
04
3701
3508
9107
08
09
06
9112
3704
PC14
14
13
22
9301
29
12
11
3704
23
24
10
1305
3701
44
07
3508
25
37
22
9301
38
28
23
36
M6
43
30
27
26
39
3704
3402
PC9
42
34
30
PC5
41
3501
33
3709
31
3402
08
40
3704
27
32
M5
35
3402

INDEX	PART NO.	PART NAME	REC	QTY
01	4643-5607-02	COVER		1
02	4643-7309-01	LABEL		1
03	4644-0752-01	STAPLER UNIT		1
04	4643-5604-01	TORSION SPRING		1
05	4643-5606-02	ROLL		1
06	4643-5702-02	RACK		1
07	4643-5713-01	KNOB		1
08	4122-0901-01	PHOTO INTERRUPTER (PC9.14)		2
09	4643-0759-01	BASE FRAME ASSY		1
10	4643-5706-01	RING		1
11	4643-5703-01	GEAR		1
12	4643-5410-01	PULLEY		1
13	4643-5408-01	BELT		1
14	4643-5001-02	ROLLER		1
15	1067-2503-01	PIN		1
16	1075-3581-01	GEAR 24T		1
17	4643-5011-01	GEAR		1
18	4643-5003-01	FLANGE		1
19	4643-4614-01	CUSHION		1
20	9314-1911-62	MOTOR EXIT (M3)		1
21	4643-5004-01	TIMING BELT		1
22	1300-4342-07	BALL BEARING		2
23	4643-5016-03	GUIDE		2
24	4643-5401-02	PLATE		1
25	4683-5306-01	GUIDE		1
26	4643-5412-01	TIMING BELT		1
27	4643-5405-01	RACK		2
28	4643-5416-01	GUIDE		1
29	4643-5417-01	GUIDE		1
30	4643-5312-01	GUIDE		2
31	4643-5415-01	TENSION SPRING		1
32	9314-1911-81	MOTOR INTEGRATE (M5)		1
33	4643-5413-01	FLANGE		1
34	4643-5406-01	GEAR		1
35	4644-5305-03	STOPPER		1
36	4643-5402-02	PLATE		1
37	4643-5403-01	PLATE		1
38	4683-5307-01	GUIDE		1
39	4643-5404-02	PRESSURE SPRING		2
40	4643-5414-01	BRACKET		1
41	4643-5304-01	STOPPER		1
42	9335-1910-91	SOLID STATE SWITCH PAPER (PC5)		1
43	9314-1911-71	MOTOR STAPLER (M6)		1
44	4643-5715-01	GEAR		1

INDEX	PART NO.	PART NAME	REC	QTY	SFIX

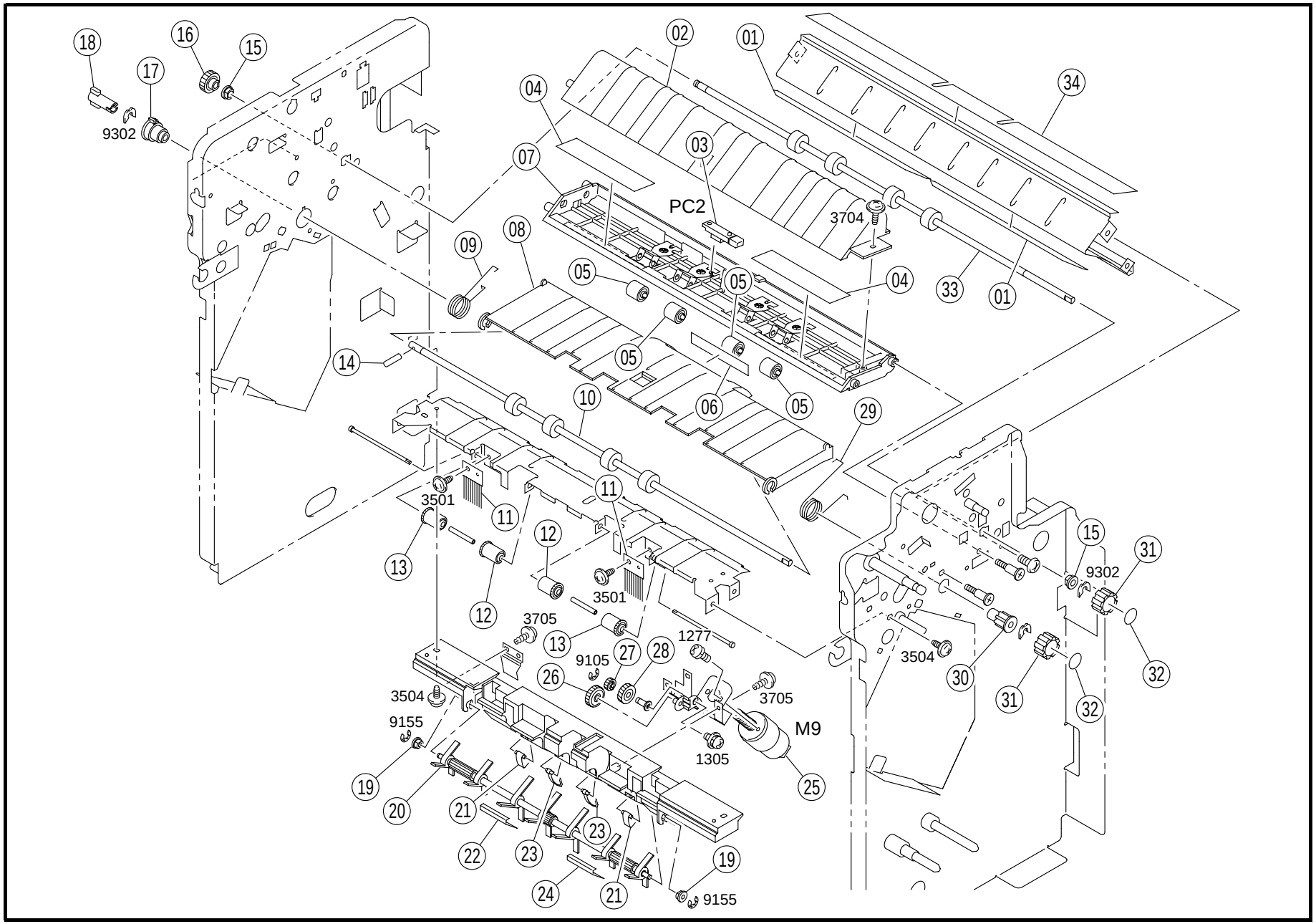
18
16
15
17
9302
02
01
34
04
07
03
PC2
3704
09
08
05
05
04
33
01
05
14
10
06
05
29
3501
11
11
12
13
12
3501
15
31
9302
3705
13
27
28
1277
9105
26
3504
30
31
32
32
3504
3705
9155
M9
19
1305
25
20
21
22
23
23
24
21
19
9155

INDEX	PART NO.	PART NAME	REC	QTY
01	4643-3040-01	GUIDE		2
02	4643-3043-02	GUIDE		1
03	9335-1910-51	SOLID STATE SWITCH L.ROUTE (PC2)		1
04	4643-3079-01	GUIDE		2
05	4643-3031-01	ROLL		4
06	4644-7307-01	LABEL		1
07	4643-0754-01	GUIDE ASSY		1
08	4643-3001-03	GUIDE		1
09	4643-3016-01	TORSION SPRING		1
10	4643-3101-01	ROLLER		1
11	4643-5228-01	NEUTRALIZING BRUSH		2
12	4643-5237-01	ROLL		2
13	4643-5226-01	ROLL		2
14	4470-2316-01	PIN		1
15	1200-3221-07	BUSHING		2
16	4643-3108-02	GEAR		1
17	4643-3123-01	BUSHING		1
18	4643-3119-01	JOINT		1

INDEX	PART NO.	PART NAME	REC	QTY
19	1200-3201-08	BUSHING		2
20	4643-5201-01	PADDLE		1
21	4643-5222-02	GUIDE		2
22	4644-5241-01	GUIDE		1
23	4643-0753-01	GUIDE ASSY		2
24	4643-5239-01	GUIDE		1
25	4643-0752-01	MOTOR ASSY L.PADDLE (M9)		1
26	4643-5224-01	GEAR		1
27	4643-5225-01	GEAR		1
28	4643-5206-01	GEAR		1
29	4643-3015-01	TORSION SPRING		1
30	4643-3122-01	BUSHING		1
31	1274-3602-02	KNOB		2
32	4643-7306-01	LABEL		2
33	4643-3107-02	ROLLER		1
34	4643-3008-01	GUIDE		1

INDEX	PART NO.	PART NAME	REC	QTY	SFIX

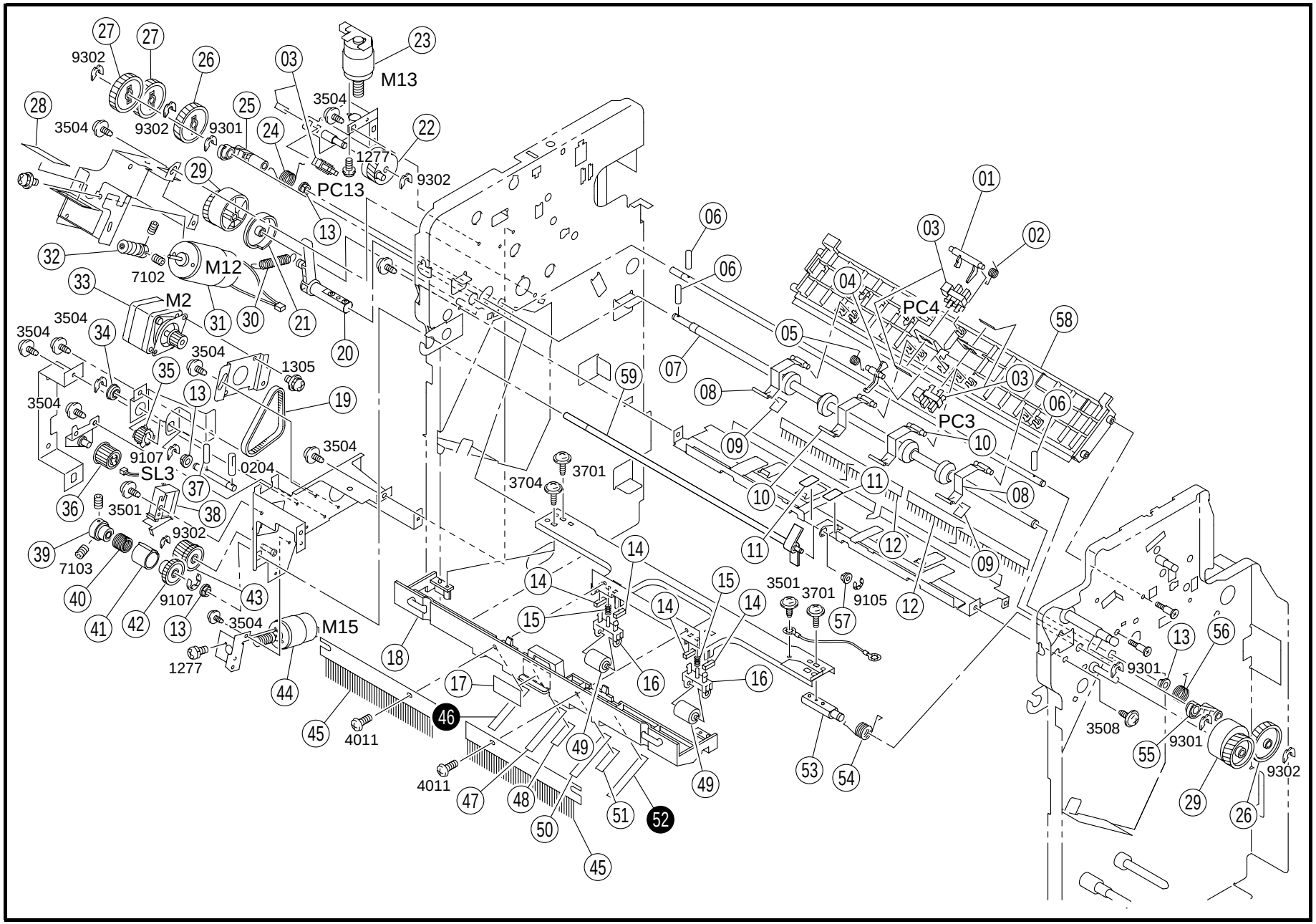
M13
PC13
M12
M2
PC4
PC3
SL3
M15
9302
3504
9301
1277
7102
1305
0204
9107
3701
3704
3501
9105
7103
4011
3508

INDEX	PART NO.	PART NAME	REC	QTY
01	4643-3013-01	ACTUATOR		1
02	4643-3014-01	TORSION SPRING		1
03	4122-0901-01	PHOTO INTERRUPTER (PC3.4.13)		3
04	4643-3020-02	ACTUATOR		1
05	4643-3037-01	TORSION SPRING		1
06	1067-2503-01	PIN		3
07	4643-3301-02	ROLLER		1
08	4643-3022-01	LEVER		2
09	4643-3065-01	GUIDE		2
10	4643-3066-02	LEVER		2
11	4643-3058-01	GUIDE		2
12	4643-3017-01	NEUTRALIZING BRUSH		2
13	1200-3221-07	BUSHING		4
14	4643-5018-01	CUSHION		4
15	4643-5014-01	PRESSURE SPRING		2
16	4643-5007-01	HOLDER		2
17	4643-7319-01	LABEL		1
18	4643-3006-03	GUIDE		1
19	4643-3104-01	TIMING BELT		1
20	4643-5009-01	LEVER		1
21	4643-3310-02	DETECTING PLATE		1
22	4643-5106-01	CAM		1
23	4643-0757-01	MOTOR ASSY EXIT ROLL (M13)		1
24	4643-3308-02	TORSION SPRING		1
25	4643-3305-02	ARM		1
26	4643-3309-01	GEAR		2
27	4643-3311-01	GEAR		2
28	4643-3407-01	COVER		1
29	4643-3315-02	CAM		2

INDEX	PART NO.	PART NAME	REC	QTY
30	4643-5010-01	TENSION SPRING		1
31	4643-0751-01	MOTOR ASSY ALIENATE (M12)		1
32	4643-3406-02	WORM		1
33	9314-1911-62	MOTOR L.ROUTE (M2)		1
34	4102-4058-01	BALL BEARING		1
35	4643-3102-01	PULLEY		1
36	4643-3312-01	PULLEY		1
37	4470-2316-01	PIN		1
38	4109-6201-02	SOLENOID U.PADDLE (SL3)		1
39	4643-5219-03	DRUM		1
40	4643-5220-01	TORSION SPRING	RP	1
41	4643-5221-01	COLLAR		1
42	4643-5208-01	GEAR		1
43	4643-5209-01	GEAR		1
44	4643-0752-01	MOTOR ASSY U.PADDLE (M15)		1
45	4643-5017-01	NEUTRALIZING BRUSH		2
47	4643-3062-02	GUIDE		1
48	4643-3070-02	GUIDE		1
49	4643-5008-01	ROLLER		2
50	4643-3077-02	GUIDE		1
51	4643-3078-02	GUIDE		1
53	4643-5006-01	SHAFT		1
54	4643-5019-01	TORSION SPRING		1
55	4643-3317-02	ARM		1
56	4643-3307-02	TORSION SPRING		1
57	1200-3201-08	BUSHING		1
58	4643-3005-01	GUIDE		1
59	4643-5210-03	PADDLE		1

INDEX	PART NO.	PART NAME	REC	QTY	SFIX
46	4643-3062-02	GUIDE		1	612, 614
52	4643-3077-02	GUIDE		1	612, 614

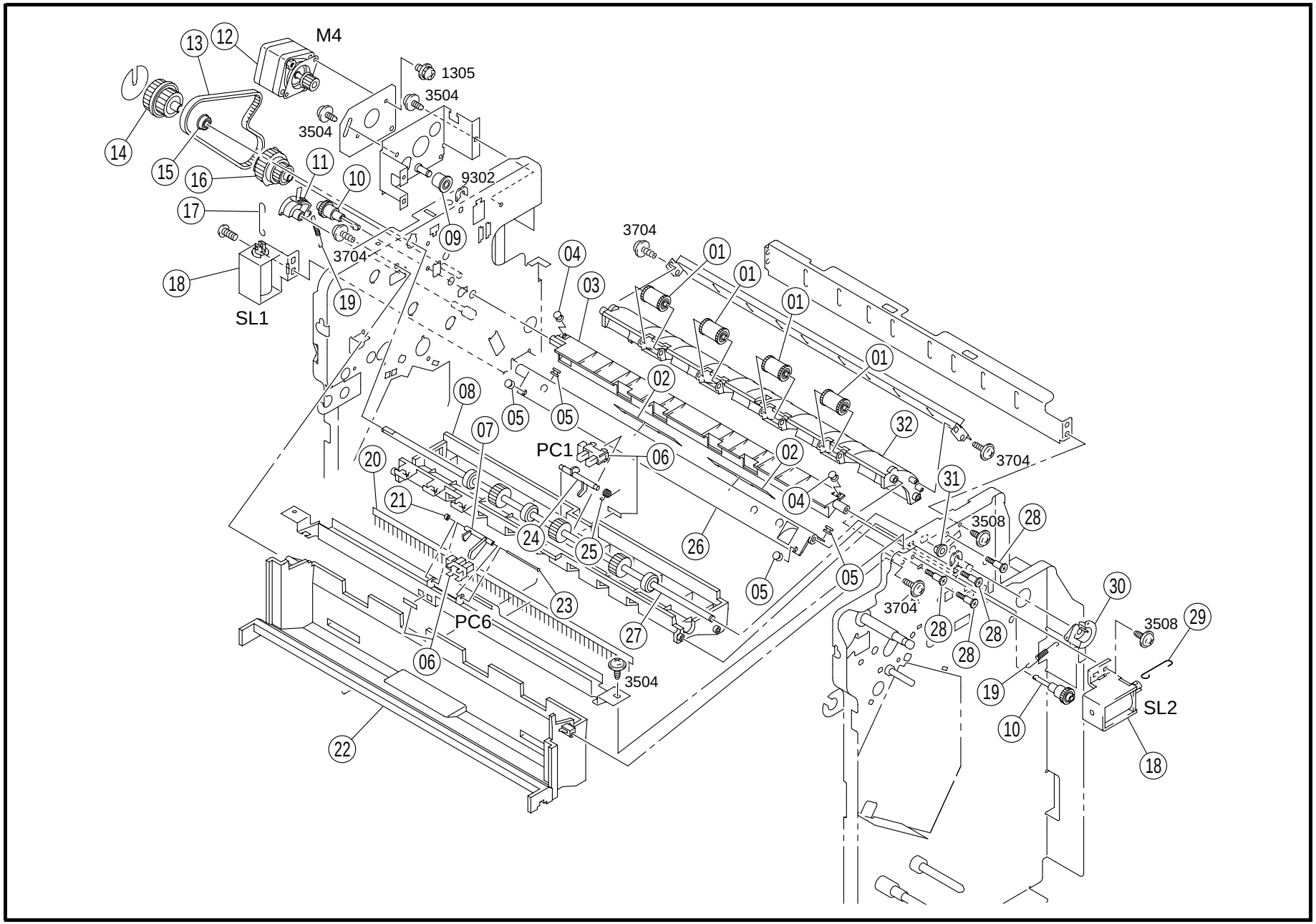
M4
1305
3504
3504
9302
3704
3704
SL1
PC1
PC6
3704
3508
3704
3508
SL2
3504

INDEX	PART NO.	PART NAME	REC	QTY
01	4643-3059-01	ROLL		4
02	4643-3218-02	GUIDE		2
03	4643-3201-01	PAWL		1
04	4643-3216-01	BUSHING		2
05	4643-3215-01	BUSHING		4
06	4122-0901-01	PHOTO INTERRUPTER TRAY (PC1.6)		2
07	4643-3046-01	ACTUATOR		1
08	4643-3029-02	GUIDE		1
09	4469-2447-01	PULLEY		1
10	4643-3208-01	GEAR		2
11	4643-3204-01	GEAR		1
12	9314-1911-62	MOTOR U.ROUTE (M4)		1
13	4643-3113-01	TIMING BELT		1
14	4643-3110-01	GEAR		1
15	4102-4058-01	BALL BEARING		1
16	4643-3109-02	GEAR		1
17	4643-3214-02	HOOK		1
18	4611-6201-01	SOLENOID ROUTE (SL1.2)		2
19	4643-3217-01	TENSION SPRING		2
20	4643-3030-01	NEUTRALIZING BRUSH		1
21	1200-2105-06	RETAINING RING		1
22	4643-4203-01	PLATE		1
23	1200-5213-04	SHAFT		1
24	4643-3034-01	ACTUATOR		1
25	4643-3018-01	TORSION SPRING		1
26	4643-3202-02	PAWL		1
27	4643-3106-02	ROLLER		1
28	4643-3007-01	SHOULDER SCREW		4
29	4643-3212-01	HOOK		1
30	4643-3211-01	GEAR		1
31	1200-3221-07	BUSHING		1
32	4643-0755-01	GUIDE ASSY		1

INDEX	PART NO.	PART NAME	REC	QTY	SFIX

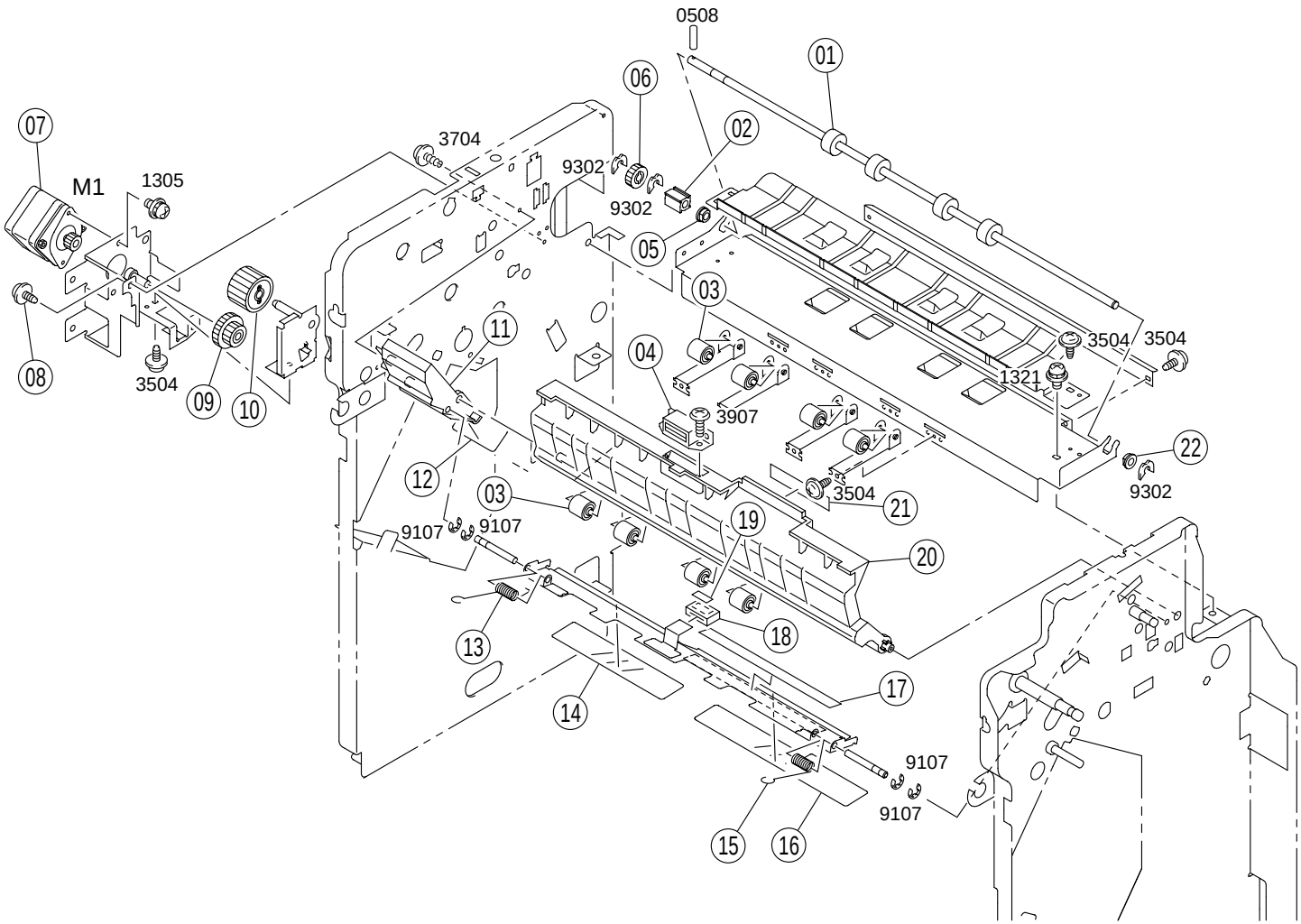
0508
01
06
02
07
3704
9302
M1
1305
9302
05
03
11
04
3504
3504
1321
08
3504
09
10
3907
22
12
3504
21
9302
03
9107
9107
19
20
18
13
17
14
9107
9107
15
16

INDEX	PART NO.	PART NAME	REC	QTY
01	4644-4042-01	ROLLER		1
02	4644-4043-01	COLLAR		1
03	4643-3031-01	ROLL		8
04	4426-2607-01	MAGNET CATCH		1
05	1200-3221-07	BUSHING		1
06	4644-4041-01	GEAR		1
07	9314-1911-71	MOTOR CARRT IN (M1)		1
08	4154-3804-01	SCREW		2
09	4643-4027-01	GEAR		1
10	4643-4026-01	GEAR		1
11	4643-3024-03	GUIDE		1
12	4643-3023-01	GUIDE		1
13	4643-3075-03	TORSION SPRING		1
14	4643-3027-02	GUIDE		1
15	4643-3074-03	TORSION SPRING		1
16	4643-3076-02	GUIDE		1
17	4643-7401-01	LABEL		1
18	4643-3073-03	HANDLE		1
19	4643-7304-02	LABEL		1
20	4643-0756-01	GUIDE ASSY		1
21	4643-7305-02	LABEL		1
22	1200-3221-04	BUSHING		1

INDEX	PART NO.	PART NAME	REC	QTY	SFIX

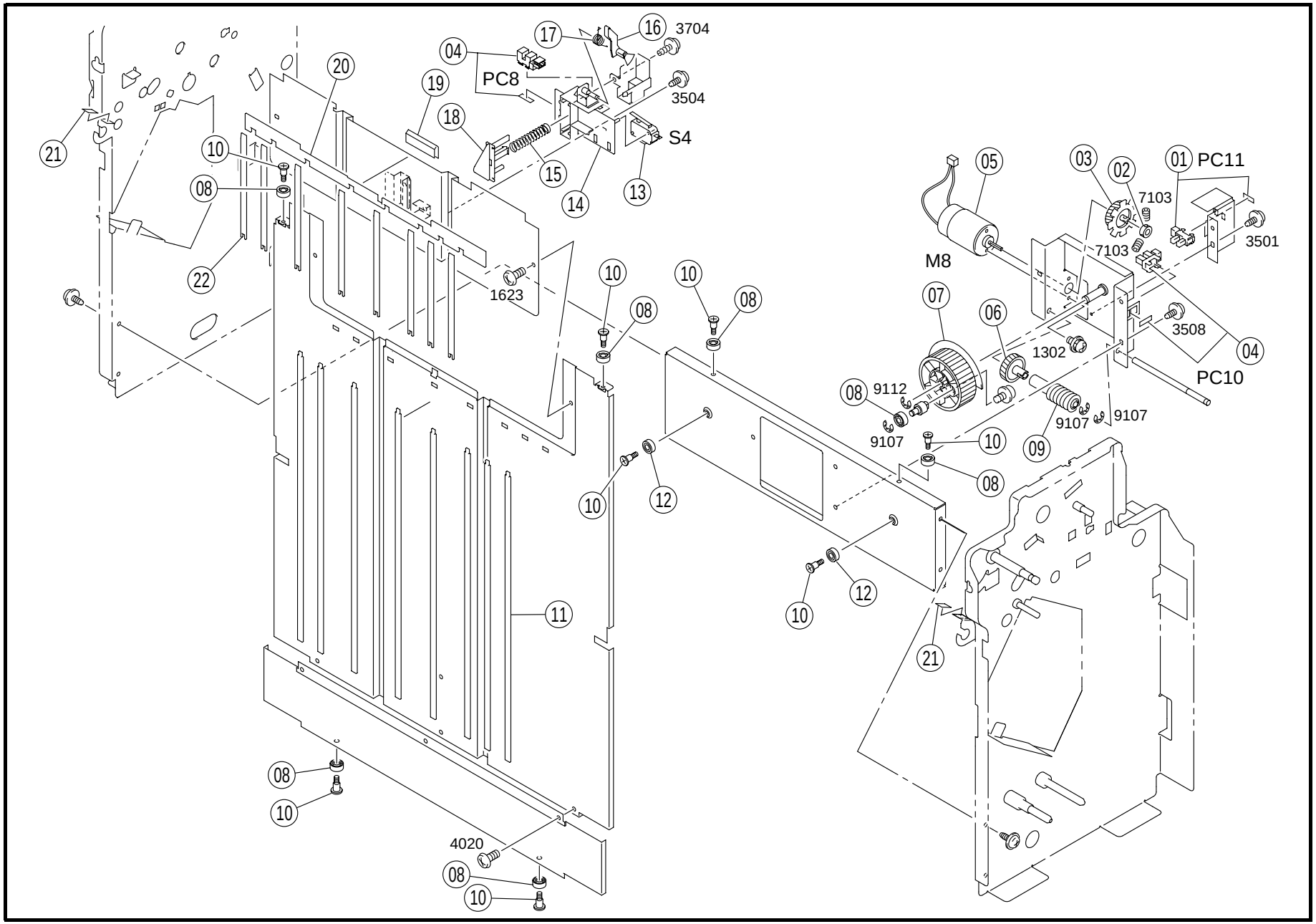
3704
3504
PC8
S4
PC11
7103
7103
3501
M8
1623
3508
1302
PC10
9112
9107
9107
9107
4020

INDEX	PART NO.	PART NAME	REC	QTY
01	4640-0902-01	PHOTO INTERRUPTER SHIFT (PC11)		1
02	4643-4711-01	COLLAR		1
03	4643-4703-01	GEAR		1
04	4122-0901-01	PHOTO INTERRUPTER (PC8.10)		2
05	4643-0751-01	MOTOR ASSY SHIFT (M8)		1
06	4643-4708-01	GEAR		1
07	4643-4709-02	GEAR		1
08	4643-4604-01	ROLL		7
09	4643-4710-01	WORM		1
10	4643-4605-01	SHOULDER SCREW		8
11	4643-4616-01	GUIDE		8
12	1300-4322-01	BALL BEARING		2
13	9331-2310-11	MICROSWITCH UPPER LIM (S4)		1
14	4643-4809-03	HOLDER		1
15	4643-4808-01	PRESSURE SPRING		1
16	4643-4810-03	ACTUATOR		1
17	4643-4811-01	TORSION SPRING		1
18	4643-4807-01	ACTUATOR		1

INDEX	PART NO.	PART NAME	REC	QTY
19	4643-4623-01	GUIDE		1
20	4643-4618-01	GUIDE		1
21	4643-2026-01	STOPPER		2
22	4643-4617-02	GUIDE		8

INDEX	PART NO.	PART NAME	REC	QTY	SFIX

01 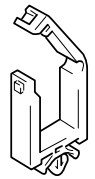	08 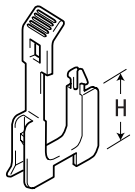						
02 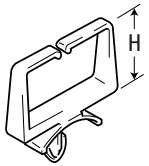	09 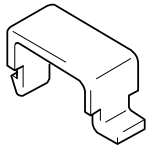						
03 - 05 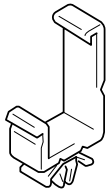	10 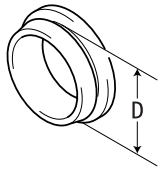						
06 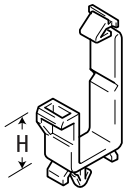	11 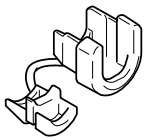						
07 							

INDEX	PART NO.	PART NAME	REC	QTY	INDEX	PART NO.	PART NAME	REC	QTY
01	9384-1310-11	WIRING SADDLE 5.2H		2					
02	9384-1310-81	WIRING SADDLE 6.4H		5					
03	9384-1310-91	WIRING SADDLE 18.5H		1					
04	9384-1311-01	WIRING SADDLE 27H		2					
05	9384-1311-21	WIRING SADDLE 16.8H		6					
06	9384-1921-01	WIRING SADDLE 14.4H		12					
07	9384-2010-21	EDGE COVER 8.5H		2					
08	9384-2010-31	EDGE COVER 15.4H		1					
09	1139-5558-01	CORD CLAMP		1					
10	0721-4203-12	COLLAR 17D		1					
11	9384-1621-61	CORD BUSHING		1					

INDEX	PART NO.	PART NAME	REC	QTY	SFIX

INDEX	PART NO.	PART NAME	ILLUST
0204	9754-2012-08	SPRING ROLL PIN	
0501 0508	9752-3016-50 9752-2010-50	PIN	
1277	9644-2606-13	SCREW	
1302 1305 1308 1318 1320 1321	9646-0305-13 9646-0306-13 9646-0308-13 9646-0408-13 9646-0410-13 9646-0412-13	SCREW	
1623 1628	9654-0408-01 9654-0410-01	SCREW	
3305	9732-0308-13	TAPPING SCREW	
3402 3407	9733-0306-13 9733-0314-13	TAPPING SCREW	
3501 3504 3508 3509 3538	9735-0306-13 9735-0308-13 9735-0408-13 9735-0410-13 9735-0408-14	TAPPING SCREW	
3701 3704 3705 3709 3712 3727	9739-0408-13 9739-0308-13 9739-0306-13 9739-0310-13 9739-0406-13 9739-0308-14	TAPPING SCREW	

INDEX	PART NO.	PART NAME	ILLUST
3907 3920	9742-0308-13 9742-0408-14	TAPPING SCREW	
4005 4009 4011 4012 4020 4026	9743-0408-13 9743-0308-01 9743-0308-13 9743-0306-13 9743-0408-14 9743-0410-13	TAPPING SCREW	
6110	9660-0800-13	NUT	
7102 7103	9684-0304-08 9684-0306-08	SET SCREW	
9105 9107 9112 9124 9125 9126 9155	9721-0300-01 9721-0400-01 9721-0600-01 9721-0300-13 9721-0400-13 9721-0600-13 9721-0250-13	RETAINING RING	
9301 9302	1066-1151-01 4425-3001-01	RETAINING RING	

INDEX	PART NO.	PART NAME	ILLUST

PART NO.	FIG.	INDEX	QTY		PART NO.	FIG.	INDEX	QTY		PART NO.	FIG.	INDEX	QTY		PART NO.	FIG.	INDEX	QTY	
0721-4203-12	11	10	1		4643-2112-01	03	02	1		4643-3218-02	08	02	2		4643-5201-01	06	20	1	
1053-3103-01	01	05	2		4643-2114-01	02	11	1		4643-3301-02	07	07	1		4643-5206-01	06	28	1	
1067-2503-01	05	15	1		4643-2115-01	02	10	1		4643-3305-02	07	25	1		4643-5208-01	07	42	1	
1067-2503-01	07	06	3		4643-2116-04	02	06	2		4643-3307-02	07	56	1		4643-5209-01	07	43	1	
1075-3581-01	05	16	1		4643-2119-02	03	04	1		4643-3308-02	07	24	1		4643-5210-03	07	59	1	
1100-1340-09	02	03	2		4643-2130-01	02	07	1		4643-3309-01	07	26	2		4643-5219-03	07	39	1	
1100-1340-09	04	05	1		4643-2131-02	03	07	1		4643-3310-02	07	21	1		4643-5220-01	07	40	1	
1139-5558-01	11	09	1		4643-2132-01	03	05	1		4643-3311-01	07	27	2		4643-5221-01	07	41	1	
1200-2105-06	08	21	1		4643-3001-03	06	08	1		4643-3312-01	07	36	1		4643-5222-02	06	21	2	
1200-3201-08	06	19	2		4643-3005-01	07	58	1		4643-3315-02	07	29	2		4643-5224-01	06	26	1	
1200-3201-08	07	57	1		4643-3006-03	07	18	1		4643-3317-02	07	55	1		4643-5225-01	06	27	1	
1200-3221-04	09	22	1		4643-3007-01	08	28	4		4643-3406-02	07	32	1		4643-5226-01	06	13	2	
1200-3221-07	06	15	2		4643-3008-01	06	34	1		4643-3407-01	07	28	1		4643-5228-01	06	11	2	
1200-3221-07	07	13	4		4643-3013-01	07	01	1		4643-4026-01	09	10	1		4643-5237-01	06	12	2	
1200-3221-07	08	31	1		4643-3014-01	07	02	1		4643-4027-01	09	09	1		4643-5239-01	06	24	1	
1200-3221-07	09	05	1		4643-3015-01	06	29	1		4643-4201-02	01	12	1		4643-5304-01	05	41	1	
1200-5213-04	08	23	1		4643-3016-01	06	09	1		4643-4202-02	01	09	1		4643-5312-01	05	30	2	
1274-3602-02	06	31	2		4643-3017-01	07	12	2		4643-4203-01	08	22	1		4643-5401-02	05	24	1	
1300-4322-01	04	20	4		4643-3018-01	08	25	1		4643-4301-03	01	11	1		4643-5402-02	05	36	1	
1300-4322-01	10	12	2		4643-3020-02	07	04	1		4643-4302-01	01	10	1		4643-5403-01	05	37	1	
1300-4342-07	04	08	2		4643-3022-01	07	08	2		4643-4401-01	04	14	2		4643-5404-02	05	39	2	
1300-4342-07	05	22	2		4643-3023-01	09	12	1		4643-4402-02	04	07	2		4643-5405-01	05	27	2	
4102-4058-01	07	34	1		4643-3024-03	09	11	1		4643-4404-01	04	03	3		4643-5406-01	05	34	1	
4102-4058-01	08	15	1		4643-3027-02	09	14	1		4643-4411-01	04	01	2		4643-5408-01	05	13	1	
4109-6201-02	07	38	1		4643-3029-02	08	08	1		4643-4412-01	04	13	3		4643-5410-01	05	12	1	
4122-0901-01	03	06	3		4643-3030-01	08	20	1		4643-4413-01	04	22	2		4643-5412-01	05	26	1	
4122-0901-01	04	12	1		4643-3031-01	06	05	4		4643-4515-01	04	24	1		4643-5413-01	05	33	1	
4122-0901-01	05	08	2		4643-3031-01	09	03	8		4643-4516-02	04	06	1		4643-5414-01	05	40	1	
4122-0901-01	07	03	3		4643-3034-01	08	24	1		4643-4521-01	04	02	1		4643-5415-01	05	31	1	
4122-0901-01	08	06	2		4643-3037-01	07	05	1		4643-4525-01	04	04	1		4643-5416-01	05	28	1	
4122-0901-01	10	04	2		4643-3040-01	06	01	2		4643-4527-01	04	25	1		4643-5417-01	05	29	1	
4154-3804-01	03	01	10		4643-3043-02	06	02	1		4643-4604-01	04	19	2		4643-5604-01	05	04	1	
4154-3804-01	09	08	2		4643-3046-01	08	07	1		4643-4604-01	10	08	7		4643-5606-02	05	05	1	
4426-2607-01	09	04	1		4643-3058-01	07	11	2		4643-4605-01	04	21	4		4643-5607-02	05	01	1	
4469-2447-01	08	09	1		4643-3059-01	08	01	4		4643-4605-01	10	10	8		4643-5702-02	05	06	1	
4470-2316-01	06	14	1		4643-3062-02	07	46	1		4643-4614-01	02	02	3		4643-5703-01	05	11	1	
4470-2316-01	07	37	1		4643-3062-02	07	47	1		4643-4614-01	05	19	1		4643-5706-01	05	10	1	
4470-4191-01	04	30	1		4643-3065-01	07	09	2		4643-4616-01	10	11	8		4643-5713-01	05	07	1	
4493-2414-02	02	09	2		4643-3066-02	07	10	2		4643-4617-02	10	22	8		4643-5715-01	05	44	1	
4611-6053-01	04	23	1		4643-3070-02	07	48	1		4643-4618-01	10	20	1		4643-6601-01	03	11	1	
4611-6054-01	04	16	1		4643-3073-03	09	18	1		4643-4623-01	10	19	1		4643-7301-01	01	03	1	
4611-6201-01	08	18	2		4643-3074-03	09	15	1		4643-4703-01	10	03	1		4643-7302-01	01	18	1	
4640-0902-01	10	01	1		4643-3075-03	09	13	1		4643-4708-01	10	06	1		4643-7304-02	09	19	1	
4643-0751-01	07	31	1		4643-3076-02	09	16	1		4643-4709-02	10	07	1		4643-7305-02	09	21	1	
4643-0751-01	10	05	1		4643-3077-02	07	50	1		4643-4710-01	10	09	1		4643-7306-01	06	32	2	
4643-0752-01	06	25	1		4643-3077-02	07	52	1		4643-4711-01	10	02	1		4643-7309-01	05	02	1	
4643-0752-01	07	44	1		4643-3078-02	07	51	1		4643-4801-02	04	09	1		4643-7311-01	01	14	1	
4643-0753-01	06	23	2		4643-3079-01	06	04	2		4643-4802-01	04	10	1		4643-7318-01	01	14	1	
4643-0754-01	06	07	1		4643-3101-01	06	10	1		4643-4805-01	04	15	1		4643-7319-01	07	17	1	
4643-0755-01	08	32	1		4643-3102-01	07	35	1		4643-4806-01	04	17	2		4643-7401-01	09	17	1	
4643-0756-01	09	20	1		4643-3104-01	07	19	1		4643-4807-01	10	18	1		4644-0101-02	03	10	1	
4643-0757-01	07	23	1		4643-3106-02	08	27	1		4643-4808-01	10	15	1		4644-0751-01	04	29	1	
4643-0759-01	05	09	1		4643-3107-02	06	33	1		4643-4809-03	10	14	1		4644-0752-01	05	03	1	
4643-0760-01	04	18	4		4643-3108-02	06	16	1		4643-4810-03	10	16	1		4644-4041-01	09	06	1	
4643-1001-03	01	01	1		4643-3109-02	08	16	1		4643-4811-01	10	17	1		4644-4042-01	09	01	1	
4643-1002-03	01	08	1		4643-3110-01	08	14	1		4643-5001-02	05	14	1		4644-4043-01	09	02	1	
4643-1003-05	01	13	1		4643-3113-01	08	13	1		4643-5003-01	05	18	1		4644-4531-01	04	26	1	
4643-1004-05	01	02	1		4643-3119-01	06	18	1		4643-5004-01	05	21	1		4644-4532-01	04	27	1	
4643-1005-02	01	06	1		4643-3122-01	06	30	1		4643-5006-01	07	53	1		4644-4533-01	04	28	1	
4643-1009-02	01	07	4		4643-3123-01	06	17	1		4643-5007-01	07	16	2		4644-5241-01	06	22	1	
4643-1010-04	01	17	1		4643-3201-01	08	03	1		4643-5008-01	07	49	2		4644-5305-03	05	35	1	
4643-1011-02	01	16	1		4643-3202-02	08	26	1		4643-5009-01	07	20	1		4644-7303-01	02	01	1	
4643-1015-03	02	04	1		4643-3204-01	08	11	1		4643-5010-01	07	30	1		4644-7307-01	06	06	1	
4643-1020-02	01	04	1		4643-3208-01	08	10	2		4643-5011-01	05	17	1		4644-7312-01	01	19	1	
4643-2008-01	02	08	2		4643-3211-01	08	30	1		4643-5014-01	07	15	2		4644-7315-01	01	20	1	
4643-2009-02	01	15	2		4643-3212-01	08	29	1		4643-5016-03	05	23	2		4683-5306-01	05	25	1	
4643-2026-01	10	21	2		4643-3214-02	08	17	1		4643-5017-01	07	45	2		4683-5307-01	05	38	1	
4643-2101-02	02	05	2		4643-3215-01	08	05	4		4643-5018-01	07	14	4		9314-1911-62	05	20	1	
4643-2103-01	03	08	2		4643-3216-01	08	04	2		4643-5019-01	07	54	1		9314-1911-62	07	33	1	
4643-2105-01	03	09	2		4643-3217-01	08	19	2		4643-5106-01	07	22	1		9314-1911-62	08	12	1	

PART NO.	FIG.	INDEX	QTY		PART NO.	FIG.	INDEX	QTY		PART NO.	FIG.	INDEX	QTY		PART NO.	FIG.	INDEX	QTY	
9314-1911-71	05	43	1																
9314-1911-71	09	07	1																
9314-1911-81	05	32	1																
9331-2310-11	04	11	1																
9331-2310-11	10	13	1																
9331-2710-11	03	03	1																
9335-1910-51	06	03	1																
9335-1910-91	05	42	1																
9384-1310-11	11	01	2																
9384-1310-81	11	02	5																
9384-1310-91	11	03	1																
9384-1311-01	11	04	2																
9384-1311-21	11	05	6																
9384-1621-61	11	11	1																
9384-1921-01	11	06	12																
9384-2010-21	11	07	2																
9384-2010-31	11	08	1																



Copyright
2000 MINOLTA Co., Ltd.
Printed in Japan

4644-7995-21 00082830