FN-5

PARTS MANUAL

MINOLTA

SFIX CHART

SFIX No.	COUNTRY	VOLTAGE	FREQUENCY (Hz)	PAPER SIZE	SFIX No.	COUNTRY	VOLTAGE	FREQUENCY (Hz)	PAPER SIZE
711	JAPAN	-	-	METRIC	713	EXCEPT JAPAN/USA/ CANADA/EUROPE	-	-	METRIC
712	USA/CANADA	-	-	INCH	714	EUROPE	-	-	METRIC

CONTENTS

1. HOUSING ••••••

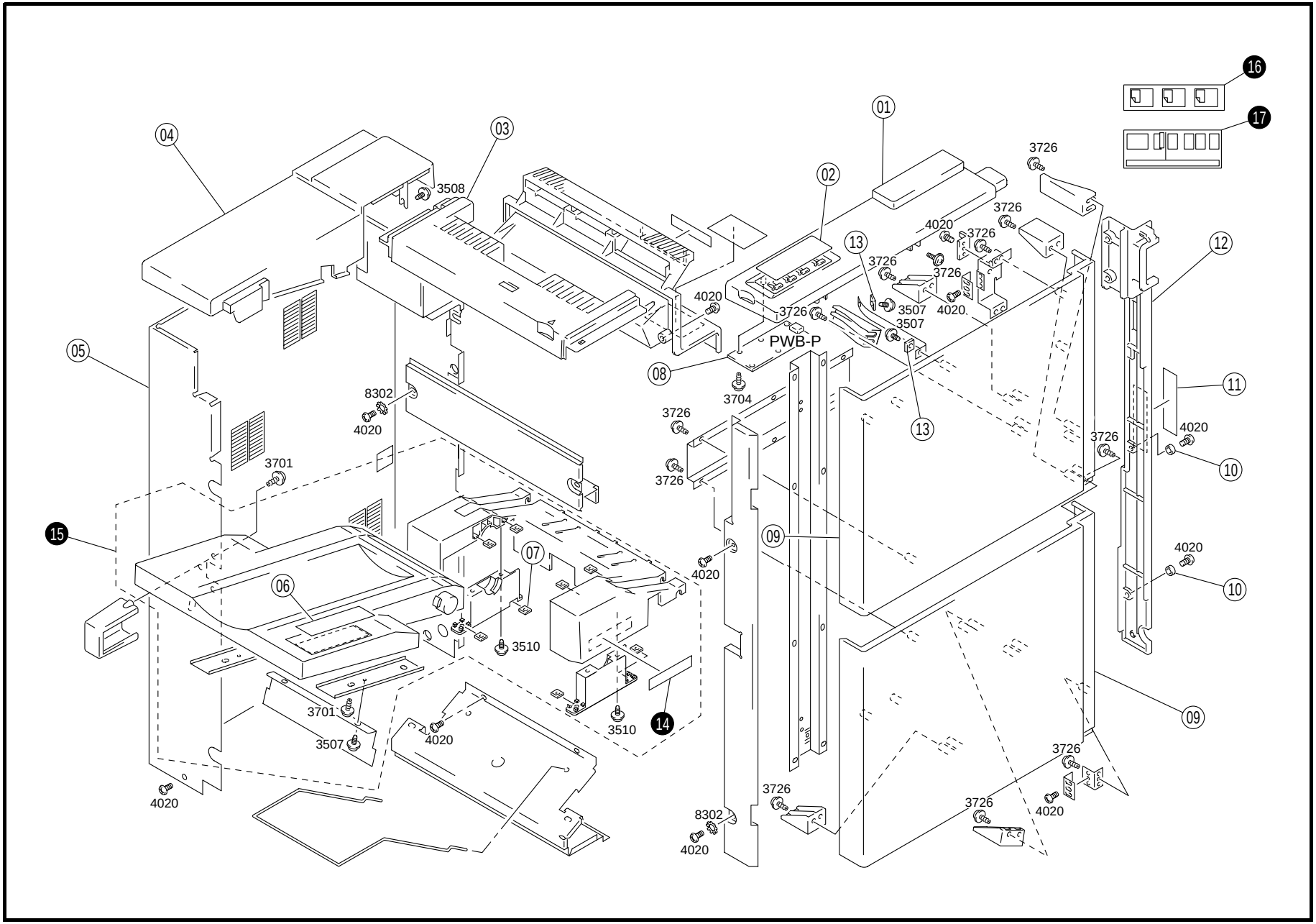
01
02
03
04
05
06
07
08
09
10
11
12
13
14
15
16
17
PWB-P
3508
3726
4020
3507
3704
8302
3701
3510

INDEX	PART NO.	PART NAME	REC	QTY	INDEX	PART NO.	PART NAME	REC	QTY
01	4470-1001-03	TOP COVER		1					
02	4470-7334-01	PANEL SHEET		1					
03	4470-1003-02	TOP COVER-MID		1					
04	4470-1002-02	COVER		1					
05	4470-2506-01	COVER		1					
06	4470-7383-01	LABEL		1					
07	4470-4134-01	PLATE NUT		8					
08	4470-0102-01	PW BOARD-P PANEL (PWB-P)	RP	1					
09	4470-1004-05	FRONT COVER		2					
10	4470-1054-01	SPACER		2					
11	4470-7341-01	LABEL WARNING		1					
12	4470-1011-04	RIGHT COVER-FNT		1					
13	1053-3103-01	PLATE		2					

INDEX	PART NO.	PART NAME	REC	QTY	SFIX
14	4470-2579-01	LABEL		1	711
14	4470-2580-01	LABEL		1	712, 713, 714
15	4470-0178-02	TRAY ASSY		1	711
15	4470-0179-02	TRAY ASSY		1	712, 713, 714
16	4470-7309-01	LABEL		1	712
16	4470-7311-01	LABEL		1	711, 713
16	4470-7315-01	LABEL		1	714
17	4470-7310-01	LABEL POSITION		1	713
17	4470-7312-01	LABEL POSITION		1	712
17	4470-7313-01	LABEL POSITION		1	714
17	4470-7314-01	LABEL		1	711

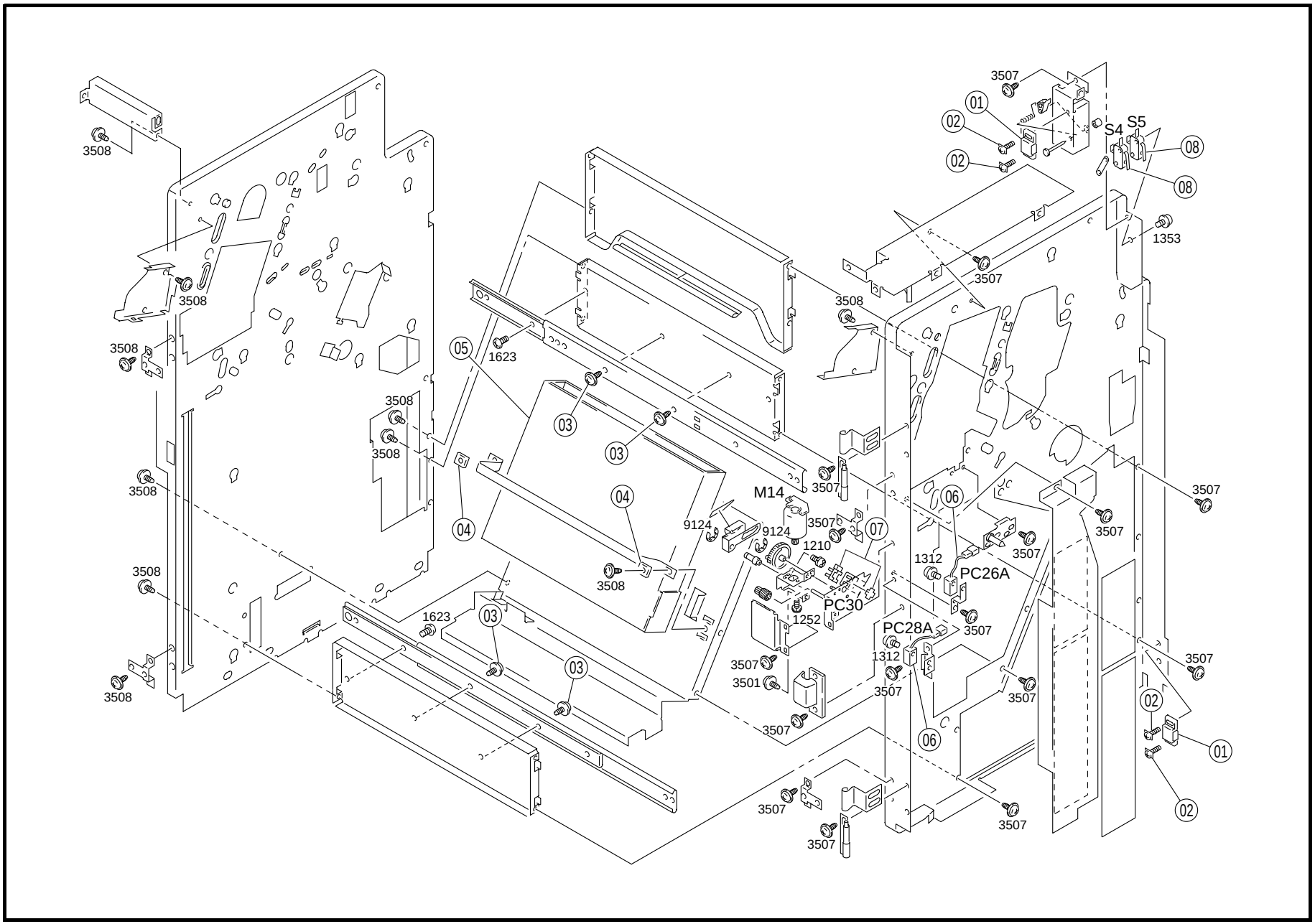
3508
3507
01
02
S4
S5
08
1353
05
1623
03
04
M14
9124
1210
06
07
1312
PC26A
PC30
1252
PC28A
3501

INDEX	PART NO.	PART NAME	REC	QTY
01	1500-2640-04	MAGNET CATCH		2
02	1053-1324-01	TAPPING SCREW		4
03	4470-3020-01	TAPPING SCREW		4
04	4470-5035-01	SUPPORT PLATE		2
05	4427-3613-01	PUNCH TRASH BOX		1
06	4470-6301-01	PHOTO INTERRUPTER (PC26A.28A)		2
07	4640-0902-01	PHOTO INTERRUPTER STAPL (PC30)		1
08	9331-2710-11	MICRO SWITCH (S4.5)		2

INDEX	PART NO.	PART NAME	REC	QTY

INDEX	PART NO.	PART NAME	REC	QTY

INDEX	PART NO.	PART NAME	REC	QTY

SFIX

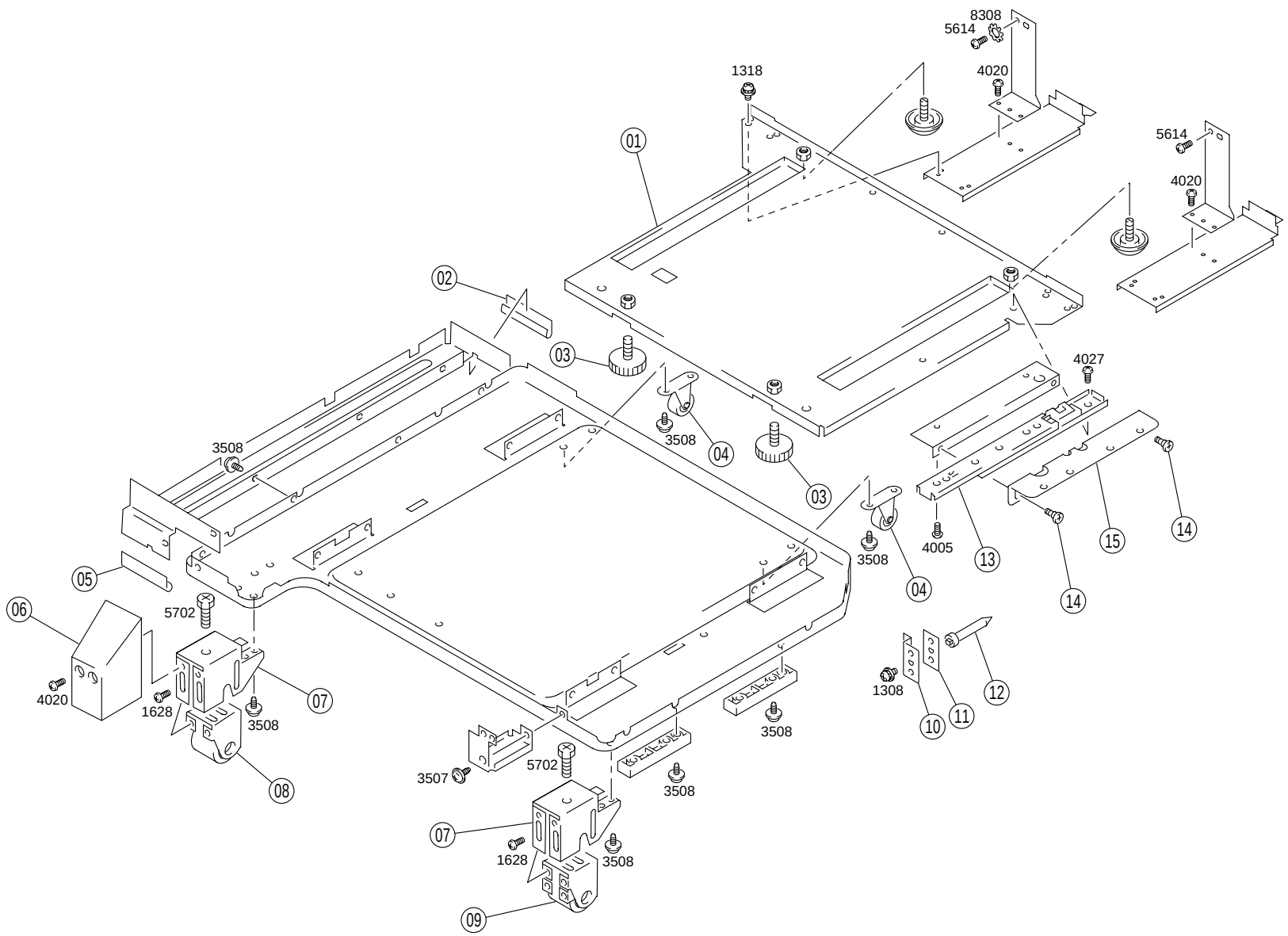
8308
5614
4020
1318
01
5614
4020
02
03
4027
3508
04
3508
03
3508
04
4005
13
15
14
14
05
06
5702
4020
1628
3508
07
08
1308
12
11
10
3508
3507
5702
3508
07
1628
3508
09

INDEX	PART NO.	PART NAME	REC	QTY	INDEX	PART NO.	PART NAME	REC	QTY
01	4470-2531-01	RAIL		1					
02	4470-2044-01	EDGE COVER		1					
03	4410-2102-01	ADJUSTING FOOT		2					
04	4417-2604-01	CASTOR		2					
05	4470-2043-01	EDGE COVER		1					
06	4427-1406-01	COVER		1					
07	4410-2319-01	BRACKET		2					
08	4427-2612-01	CASTOR		1					
09	4470-0234-01	CASTOR		1					
10	4470-2525-02	PLATE SPRING		1					
11	4643-2108-01	BRACKET		1					
12	4470-2526-01	SHAFT		1					
13	4470-2532-01	RAIL		1					
14	4427-4117-01	SHOULDER SCREW		2					
15	4470-2035-01	BRACKET		1					

INDEX	PART NO.	PART NAME	REC	QTY	SFIX

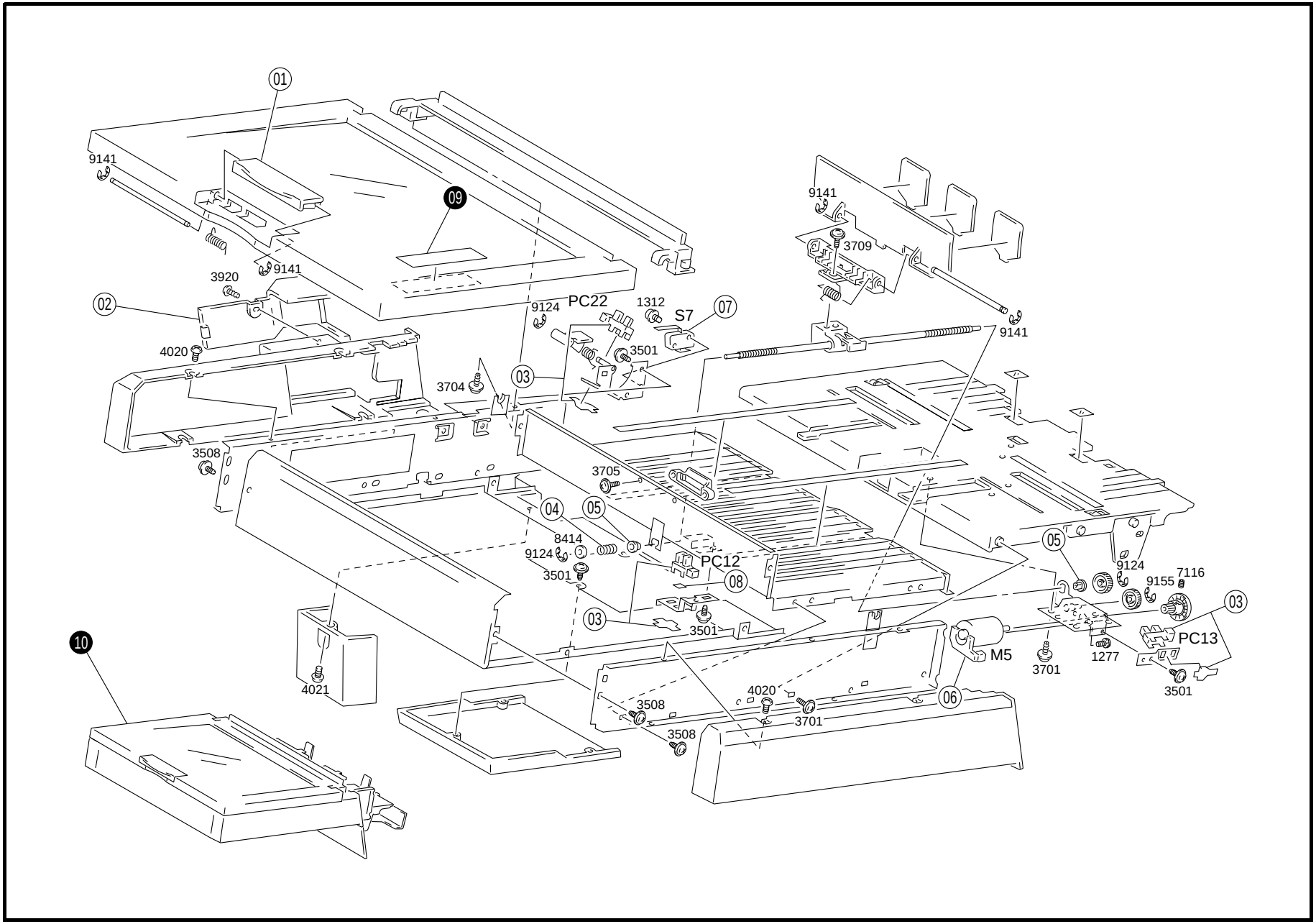
01
9141
09
9141
3920
02
4020
9124
PC22
1312
S7
07
3501
03
3704
3508
3705
04
05
8414
9124
PC12
3501
08
03
3501
10
4021
3508
4020
3701
3508
06
9141
3709
9141
05
9124
9155
7116
03
PC13
M5
3701
1277
3501

INDEX	PART NO.	PART NAME	REC	QTY
01	4470-2538-01	HANDLE		1
02	4470-2537-01	COVER		1
03	4470-0902-01	PHOTO INTERRUPTER (PC12.13.22)		3
04	4427-2204-02	PRESSURE SPRING		1
05	1200-3201-08	BUSHING		2
06	4470-0754-01	PWB-MOTOR FD ALIGN (M5)		1
07	9331-2710-11	MICRO SWITCH COVER SET (S7)		1
08	4470-4696-01	POLYESTER FILM		1

INDEX	PART NO.	PART NAME	REC	QTY	SFIX
09	4470-7306-03	LABEL		1	711
09	4470-7307-03	LABEL STAPLE		1	712, 713, 714
10	4470-0176-01	TRAY ASSY		1	712, 713, 714
10	4470-0177-01	TRAY ASSY		1	711

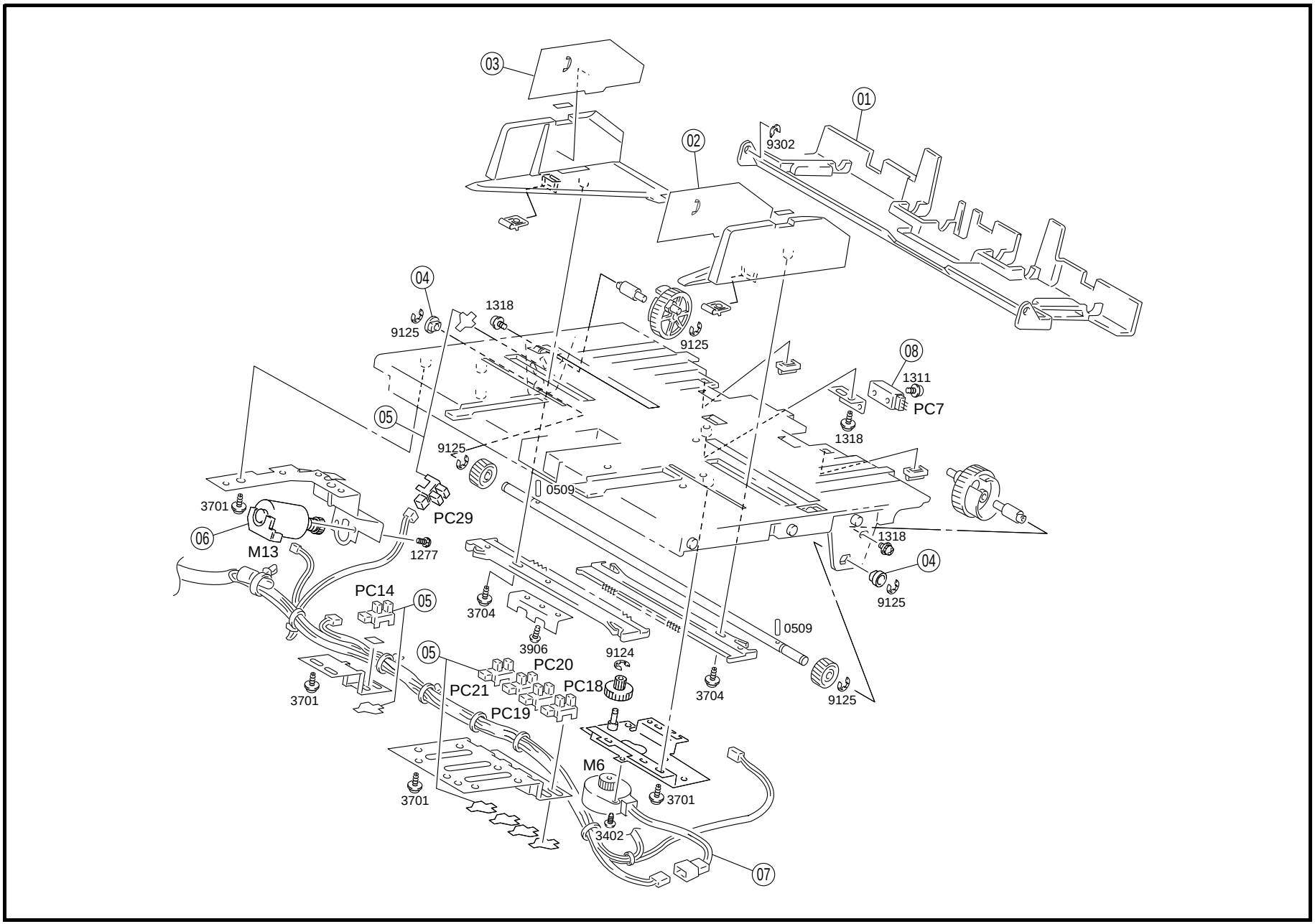
03
01
02
9302
04
1318
9125
9125
08
1311
PC7
1318
05
9125
0509
3701
PC29
06
M13
1277
1318
04
9125
PC14
05
3704
3906
9124
0509
05
PC20
PC18
PC21
PC19
3701
3704
9125
M6
3701
3701
3402
07

INDEX	PART NO.	PART NAME	REC	QTY
01	4470-4606-02	REGULATING PLATE		1
02	4470-4679-13	GUIDE		1
03	4470-4680-13	GUIDE		1
04	1274-2611-01	BUSHING		2
05	4470-0902-01	PHOTO INTERRUPTER (PC14.18-21.29)		6
06	4470-0757-01	PWB-MOTOR STOPPER (M13)		1
07	9314-1710-61	MOTOR CD ALIGN (M6)		1
08	4485-6301-01	PHOTO INTERRUPTER TRAY (PC7)		1

INDEX	PART NO.	PART NAME	REC	QTY

INDEX	PART NO.	PART NAME	REC	QTY

INDEX	PART NO.	PART NAME	REC	QTY	SFIX

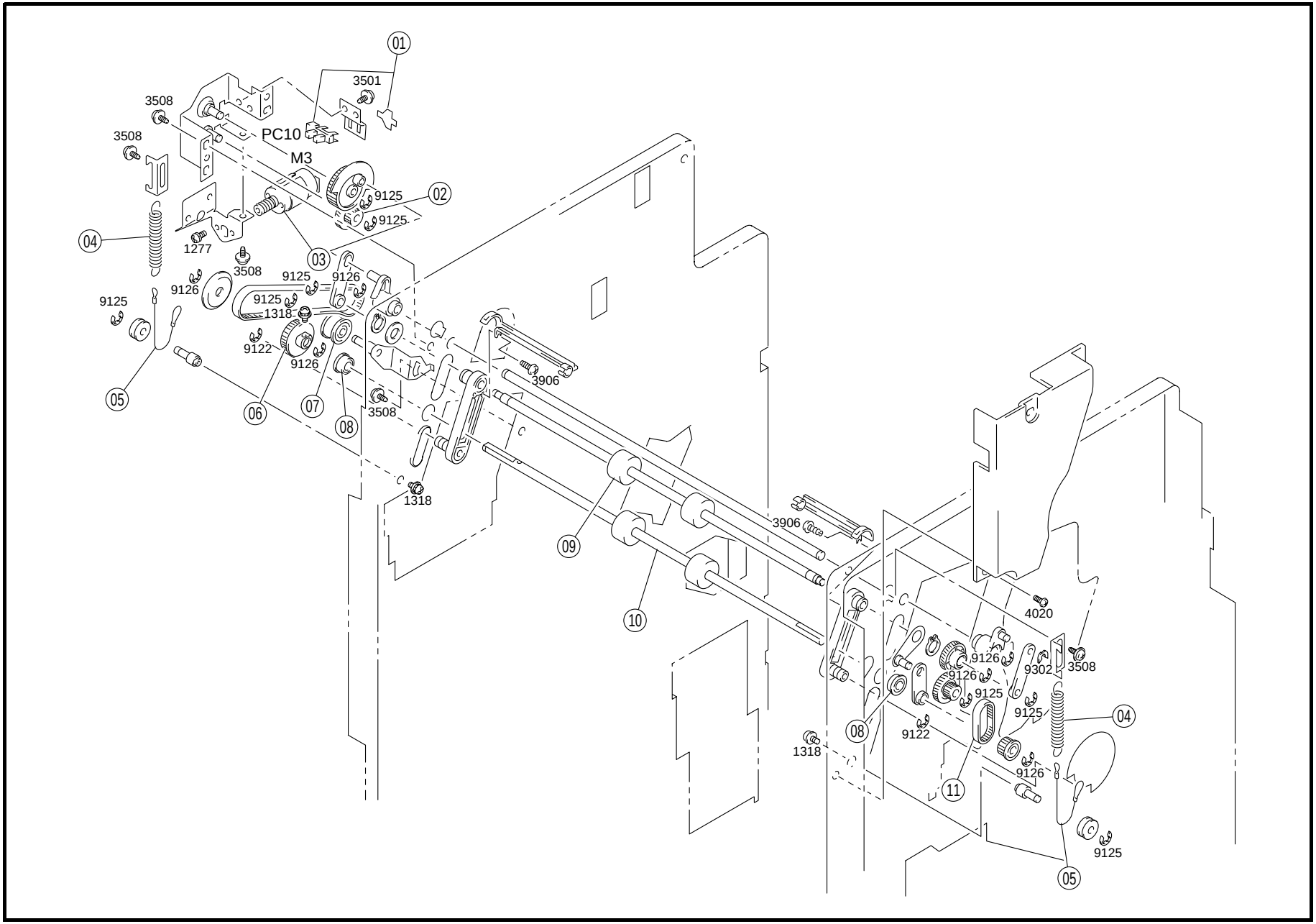
01
3501
3508
3508
PC10
M3
9125
02
9125
04
1277
3508
03
9125
9126
9126
9125
9125
1318
9122
9126
05
06
07
08
3508
3906
1318
09
3906
10
4020
9126
9126
9302
3508
9125
9125
04
08
9122
1318
9126
11
9125
05

INDEX	PART NO.	PART NAME	REC	QTY	INDEX	PART NO.	PART NAME	REC	QTY
01	4470-0902-01	PHOTO INTERRUPTER CLAMP (PC10)		1					
02	4470-4638-01	GEAR 14/40T		1					
03	4470-0752-01	PWB-MOTOR CLAMP (M3)		1					
04	4470-4633-01	TENSION SPRING		2					
05	4470-4641-01	WIRE		2					
06	4470-2347-02	PULLEY 35T		1					
07	1136-2530-02	PULLEY		1					
08	4102-3149-01	BALL BEARING		2					
09	4470-4623-01	ROLLER		1					
10	4470-4622-02	ROLLER		1					
11	1075-3056-01	TIMING BELT		1					

INDEX	PART NO.	PART NAME	REC	QTY	SFIX

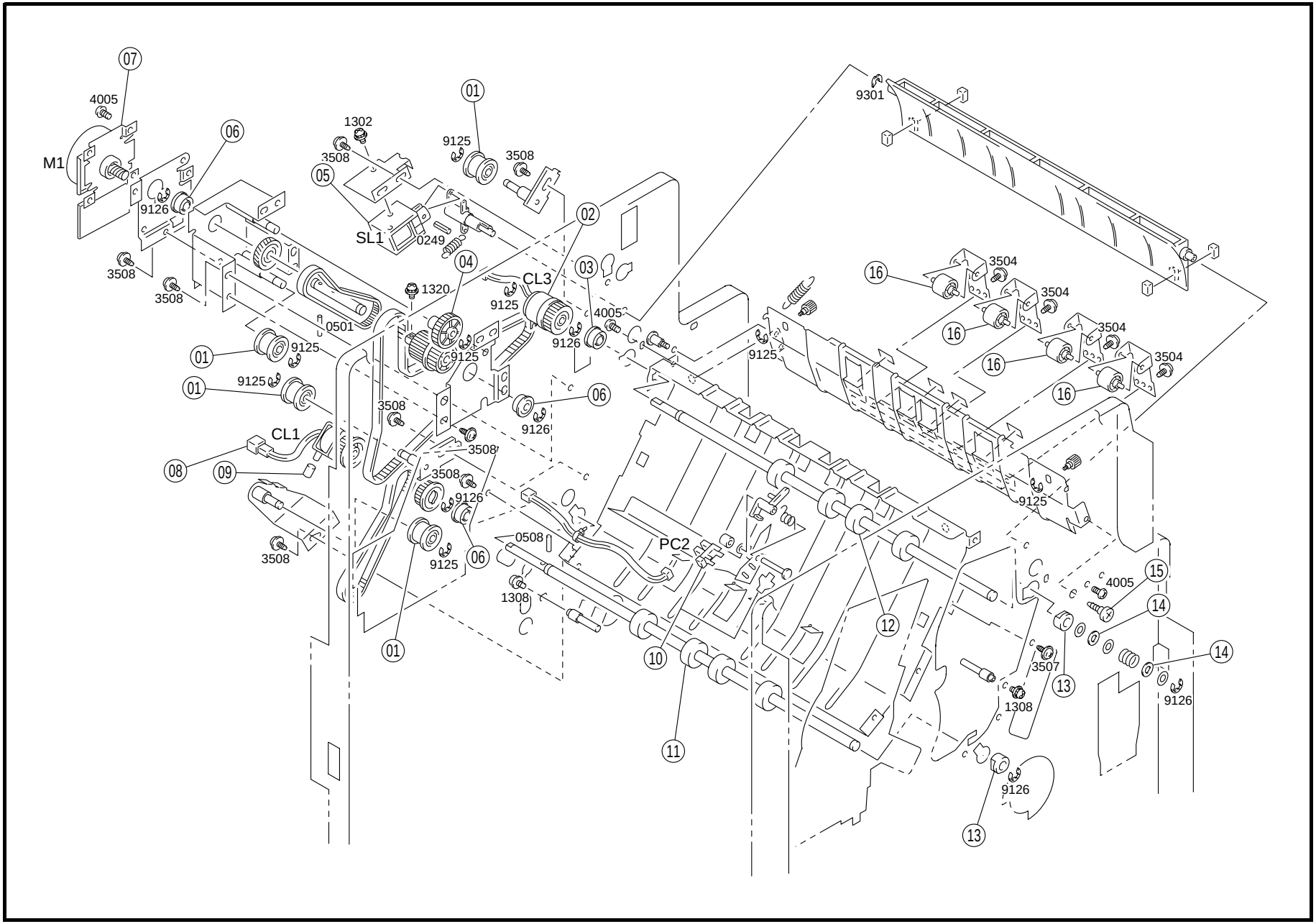
07
4005
M1
06
9126
3508
3508
1302
3508
05
SL1
0249
01
9125
3508
02
04
1320
CL3
03
9125
4005
9126
0501
01
9125
9125
01
9125
3508
06
9126
CL1
3508
08
09
3508
9126
3508
9125
06
0508
PC2
1308
01
10
11
12
9301
16
3504
3504
16
3504
16
3504
16
9125
9125
15
4005
14
14
3507
13
1308
9126
9126
13

INDEX	PART NO.	PART NAME	REC	QTY
01	1136-2530-02	PULLEY		4
02	9322-1310-71	CLUTCH REGIST2 (CL3)		1
03	1300-4342-08	BALL BEARING		1
04	1075-2663-01	GEAR 31T		1
05	9321-2310-41	SOLENOID SORT (SL1)		1
06	4102-3149-01	BALL BEARING		3
07	4470-6121-01	MOTOR TRANSPORT (M1)		1
08	9322-1310-61	CLUTCH REGIST1 (CL1)		1
09	1052-4437-01	CAP		1
10	4470-0902-01	PHOTO INTERRUPTER TRANS (PC2)		1
11	4470-2102-02	ROLLER		1
12	4470-4006-02	ROLLER		1
13	1200-3131-03	BUSHING		2
14	1200-1462-02	WASHER		2
15	4426-3137-01	SHOULDER SCREW		1
16	1033-4709-01	ROLL		4

INDEX	PART NO.	PART NAME	REC	QTY	SFIX

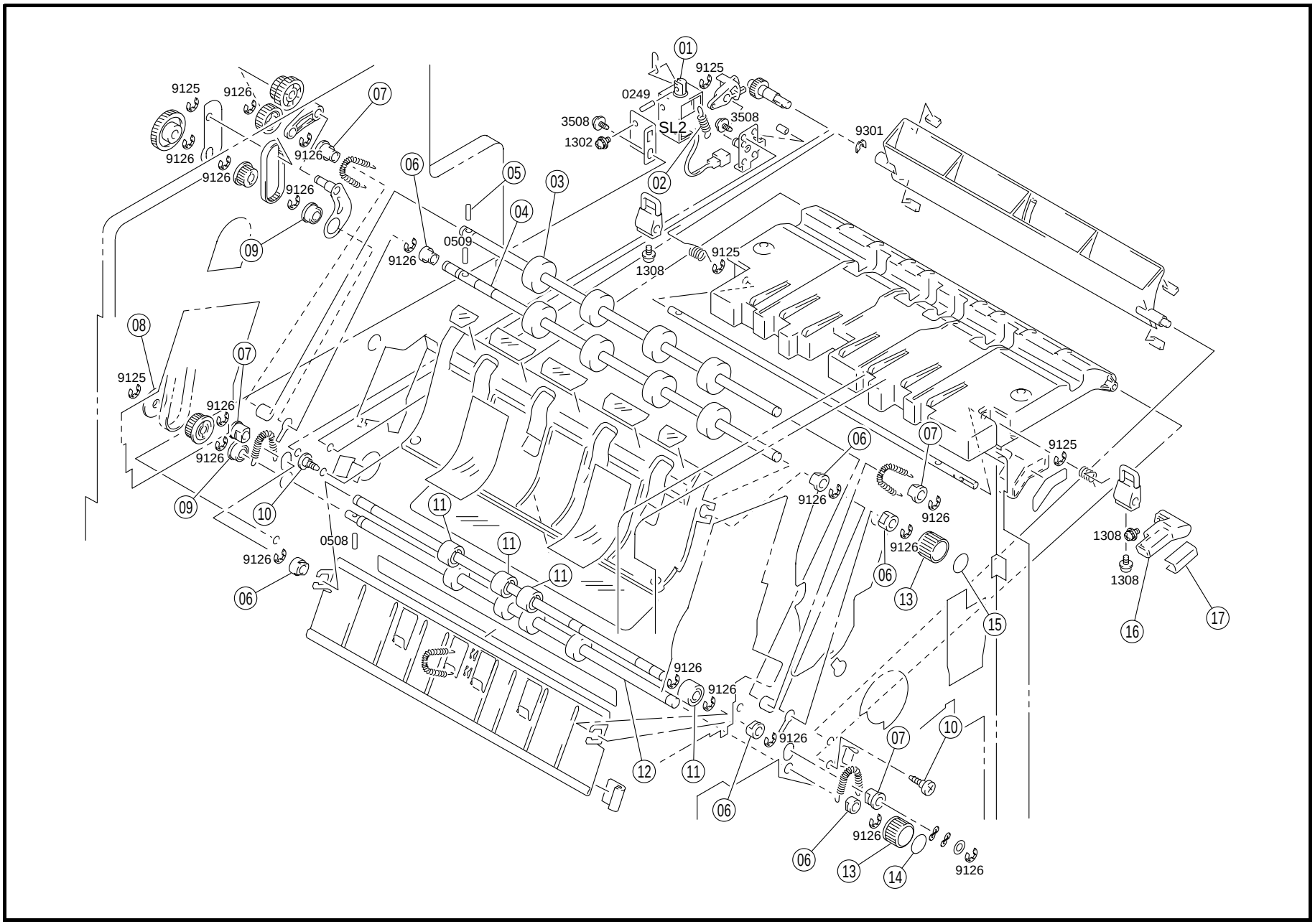
01
9125
0249
3508
SL2
3508
1302
9301
02
03
04
05
06
07
9125
9126
9126
9126
9126
09
0509
9126
1308
9125
08
07
9125
9126
9126
09
10
11
11
11
0508
9126
06
06
07
9125
9126
9126
06
13
15
1308
1308
16
17
9126
9126
9126
12
11
06
07
10
9126
06
13
14
9126

INDEX	PART NO.	PART NAME	REC	QTY	INDEX	PART NO.	PART NAME	REC	QTY
01	9321-2310-41	SOLENOID ELEVAT (SL2)		1					
02	1400-2143-14	TENSION SPRING		1					
03	4470-2604-01	ROLLER		1					
04	4470-2603-01	ROLLER		1					
05	1067-2503-01	PIN		1					
06	1200-3131-03	BUSHING		6					
07	1200-3235-04	BUSHING		4					
08	4478-5433-01	FLANGE		1					
09	4102-3149-01	BALL BEARING		2					
10	1100-1352-04	SHOULDER SCREW		2					
11	4470-2611-02	ROLL		4					
12	4470-2605-01	ROLLER		1					
13	4470-2127-01	KNOB		2					
14	4470-7323-01	LABEL FN6		1					
15	4470-7327-01	LABEL FN7		1					
16	0996-5627-01	LOCK RELEASE LEVER		1					
17	4470-7333-01	LABEL		1					

INDEX	PART NO.	PART NAME	REC	QTY	SFIX

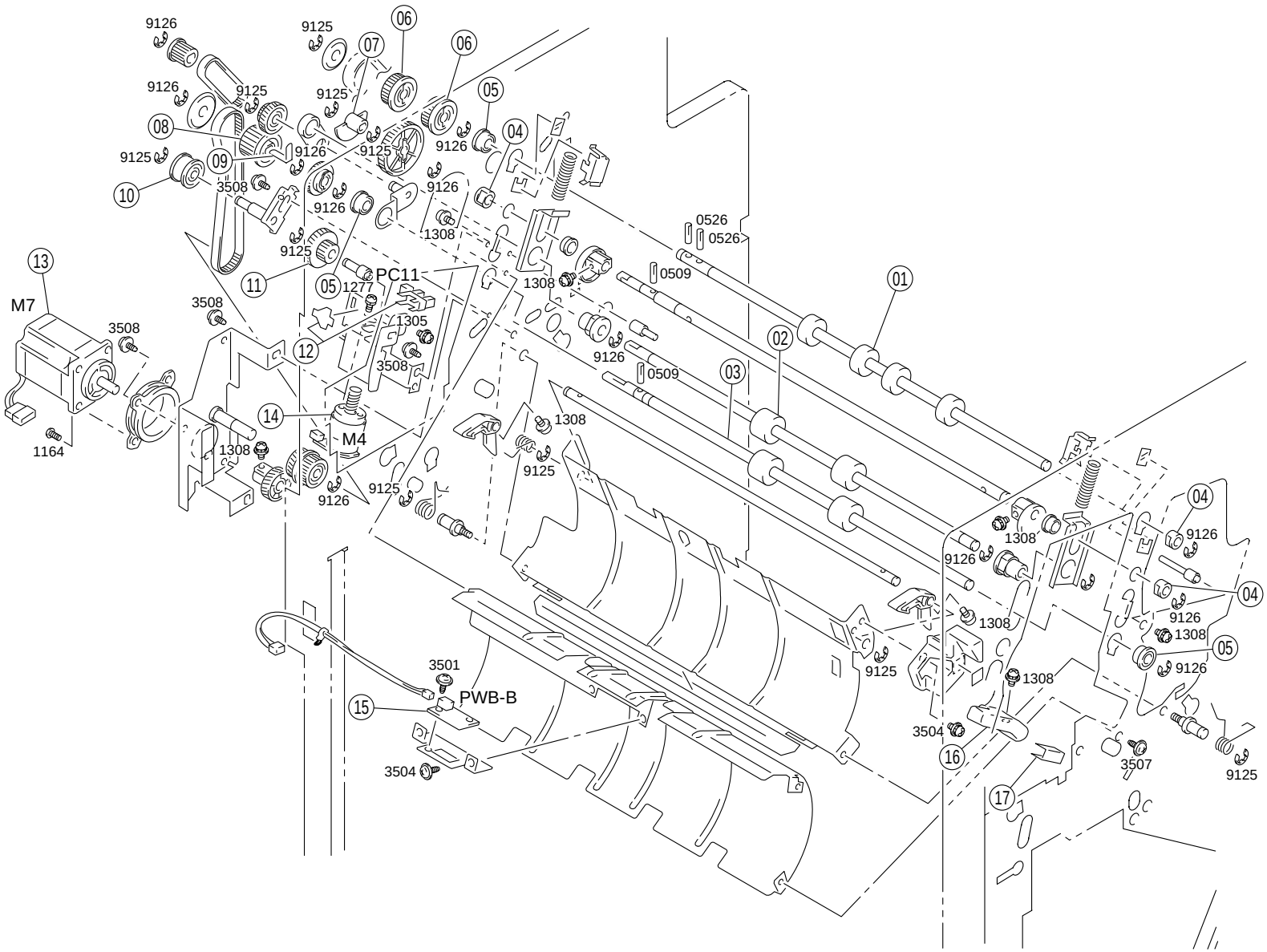
9126
9125
06
07
06
9126
9125
9125
05
08
9126
9125
9126
04
9125
09
10
3508
9126
9126
1308
0526
0526
9125
13
11
05
1277
PC11
1308
0509
01
M7
3508
3508
1305
12
3508
9126
02
0509
03
14
1308
M4
1164
1308
9125
9126
9125
04
1308
9126
9126
04
9126
1308
1308
05
9125
9126
1308
3501
PWB-B
15
3504
3504
16
3507
9125
17

INDEX	PART NO.	PART NAME	REC	QTY	INDEX	PART NO.	PART NAME	REC	QTY
01	4470-4016-01	ROLLER		1					
02	4470-4331-01	ROLLER		1					
03	4470-4330-01	ROLLER		1					
04	1200-3131-03	BUSHING		3					
05	4102-3149-01	BALL BEARING		3					
06	4470-2308-01	PULLEY 28T		2					
07	4470-4324-01	DETECTING PLATE		1					
08	4470-2345-01	PULLEY		1					
09	4470-2369-01	SEAL		1					
10	1136-2530-02	PULLEY		1					
11	4470-4638-01	GEAR 14/40T		1					
12	4470-0902-01	PHOTO INTERRUPTER CLAMP (PC11)		1					
13	9314-1710-41	MOTOR TRANSPORT (M7)		1					
14	4470-0752-01	PWB-MOTOR CLAMP (M4)		1					
15	4428-0102-01	PW BOARD-B LED (PWB-B)		1					
16	0996-5627-01	LOCK RELEASE LEVER		1					
17	4470-7333-01	LABEL		1					

INDEX	PART NO.	PART NAME	REC	QTY	SFIX

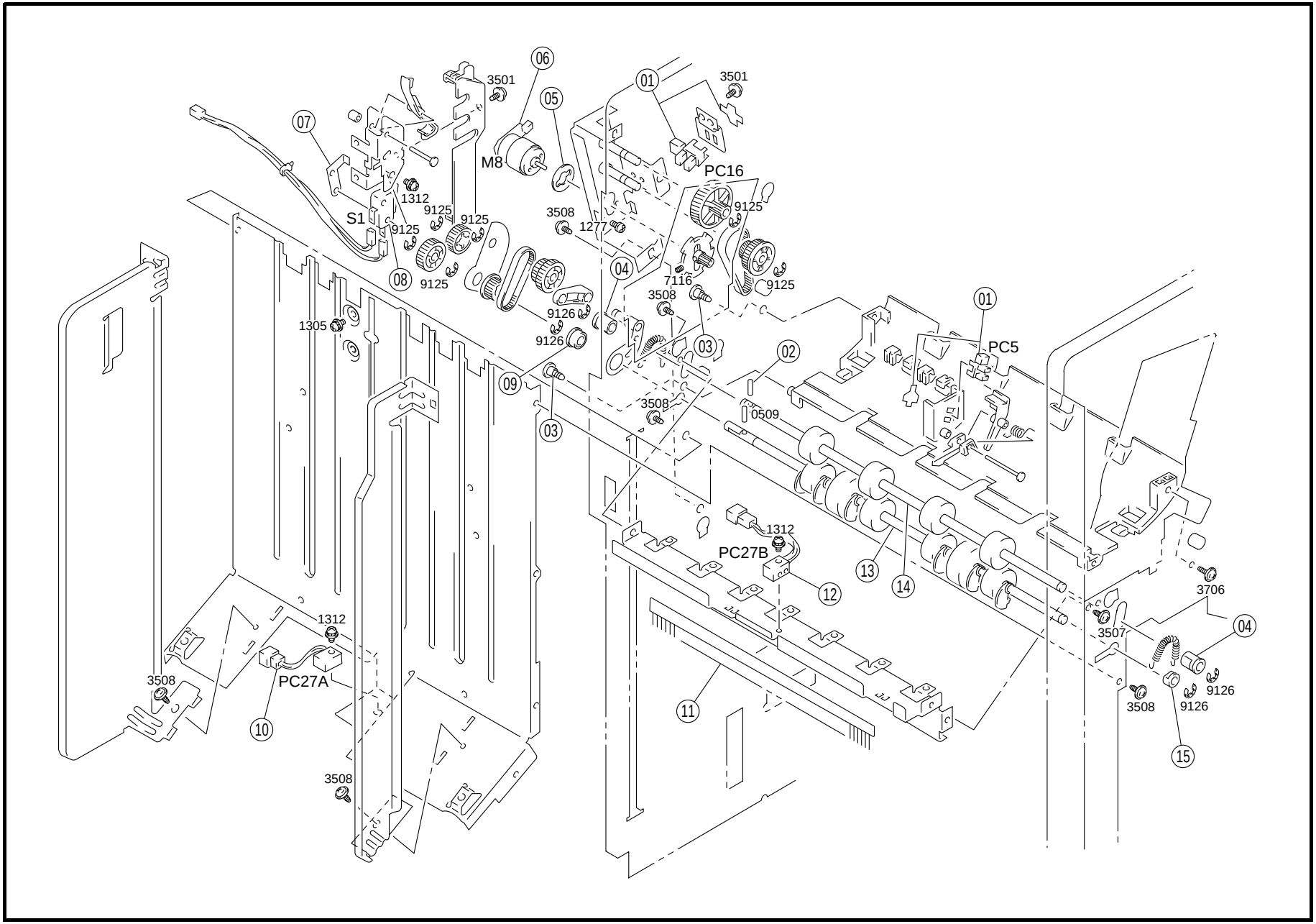
06
3501
01
3501
05
07
M8
PC16
1312
9125
9125
S1
9125
3508
1277
9125
08
9125
04
7116
9125
3508
01
1305
9126
9126
03
02
PC5
09
3508
0509
03
1312
PC27B
13
14
12
3706
1312
3507
04
3508
PC27A
9126
3508
9126
10
11
15
3508

INDEX	PART NO.	PART NAME	REC	QTY	INDEX	PART NO.	PART NAME	REC	QTY
01	4470-0902-01	PHOTO INTERRUPTER (PC5.16)		2					
02	1067-2503-01	PIN		1					
03	1100-1352-04	SHOULDER SCREW		2					
04	1200-3235-04	BUSHING		2					
05	4425-3799-01	CUSHION		1					
06	4470-0755-01	PWB-MOTOR TRAY EXIT (M8)		1					
07	1076-1203-02	PLATE NUT		1					
08	9331-2310-11	MICROSWITCH ELEVAT UP (S1)		1					
09	4102-3149-01	BALL BEARING		1					
10	4470-6301-01	PHOTO INTERRUPTER LED (PC27A)		1					
11	4470-4071-01	NEUTRALIZING BRUSH		1					
12	4470-6302-01	PHOTO INTERRUPTER PQ (PC27B)		1					
13	4470-0159-01	ROLLER		1					
14	4470-2604-01	ROLLER		1					
15	1200-3131-03	BUSHING		1					

INDEX	PART NO.	PART NAME	REC	QTY	SFIX

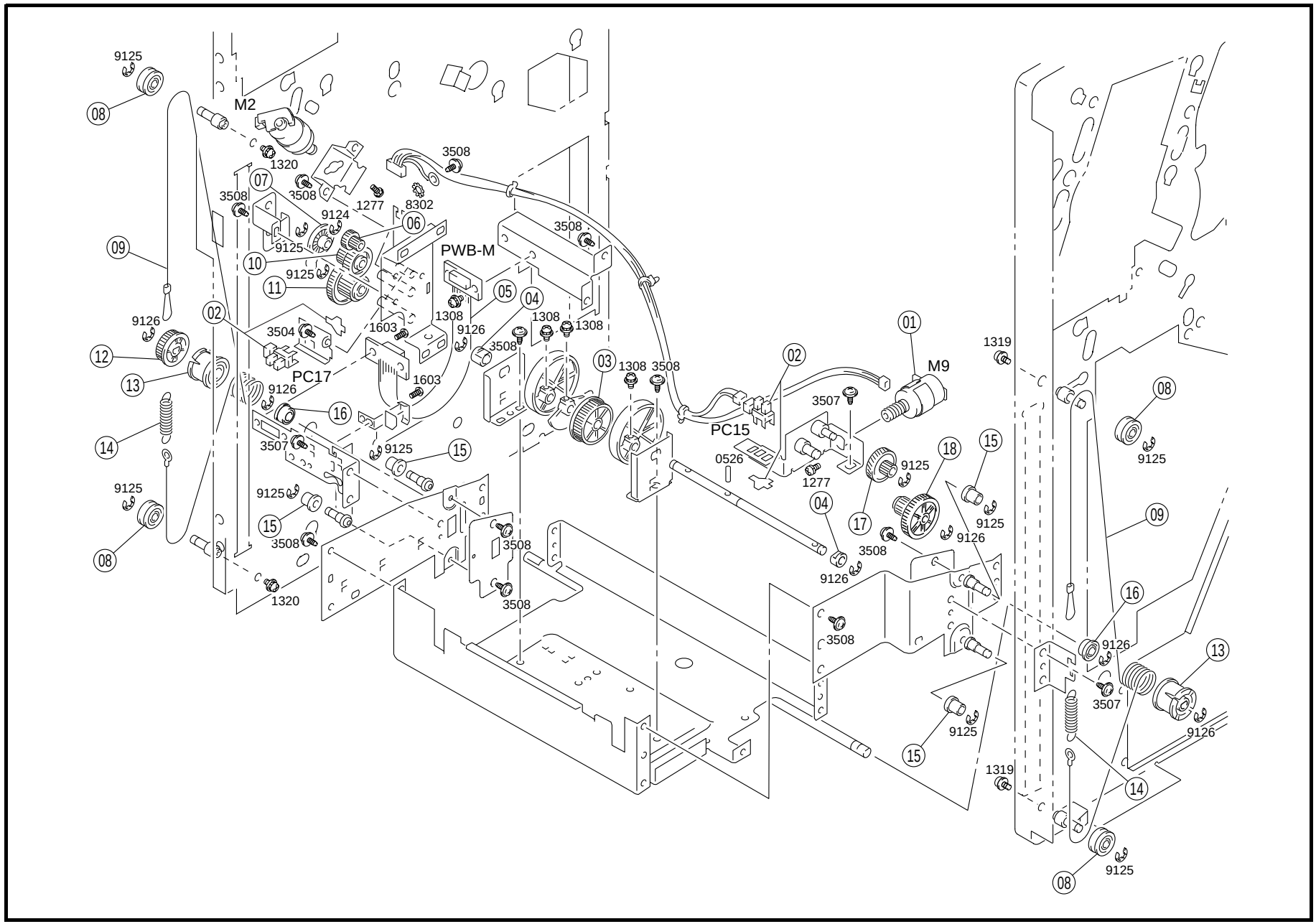
9125
08
M2
1320
3508
07
3508
1277
8302
3508
9124
06
9125
09
10
PWB-M
9125
11
05
04
1308
1308
1308
9126
02
3504
1603
9126
3508
12
PC17
1603
03
1308
3508
01
M9
1319
13
9126
16
3507
08
14
3507
9125
15
PC15
0526
18
15
9125
9125
1277
9125
04
17
9125
09
15
3508
3508
9126
3508
08
9126
1320
3508
16
3508
9126
13
3507
9126
9125
15
1319
14
9125
08

INDEX	PART NO.	PART NAME	REC	QTY	INDEX	PART NO.	PART NAME	REC	QTY
01	4470-0753-01	PWB-MOTOR PITCH (M9)		1					
02	4470-0902-01	PHOTO INTERRUPTER (PC15.17)		2					
03	4470-4153-01	GEAR 42T		1					
04	1200-3131-03	BUSHING		2					
05	1134-0107-01	PW BOARD-M FLEX (PWB-M)		1					
06	4470-4191-01	GEAR		1					
07	4425-3729-02	SYNCHRONIZING DISK		1					
08	1500-2521-21	PULLEY		4					
09	4470-4107-01	WIRE		2					
10	4470-4192-01	GEAR		1					
11	4470-4190-01	GEAR		1					
12	4470-4193-01	GEAR		1					
13	4470-4106-01	PULLEY		2					
14	4470-4108-01	TENSION SPRING		2					
15	1257-4401-01	GUIDE ROLL		4					
16	4102-3149-01	BALL BEARING		2					
17	4470-4149-01	GEAR 14/40T		1					
18	4470-4151-01	GEAR 14/56T		1					

INDEX	PART NO.	PART NAME	REC	QTY	SFIX

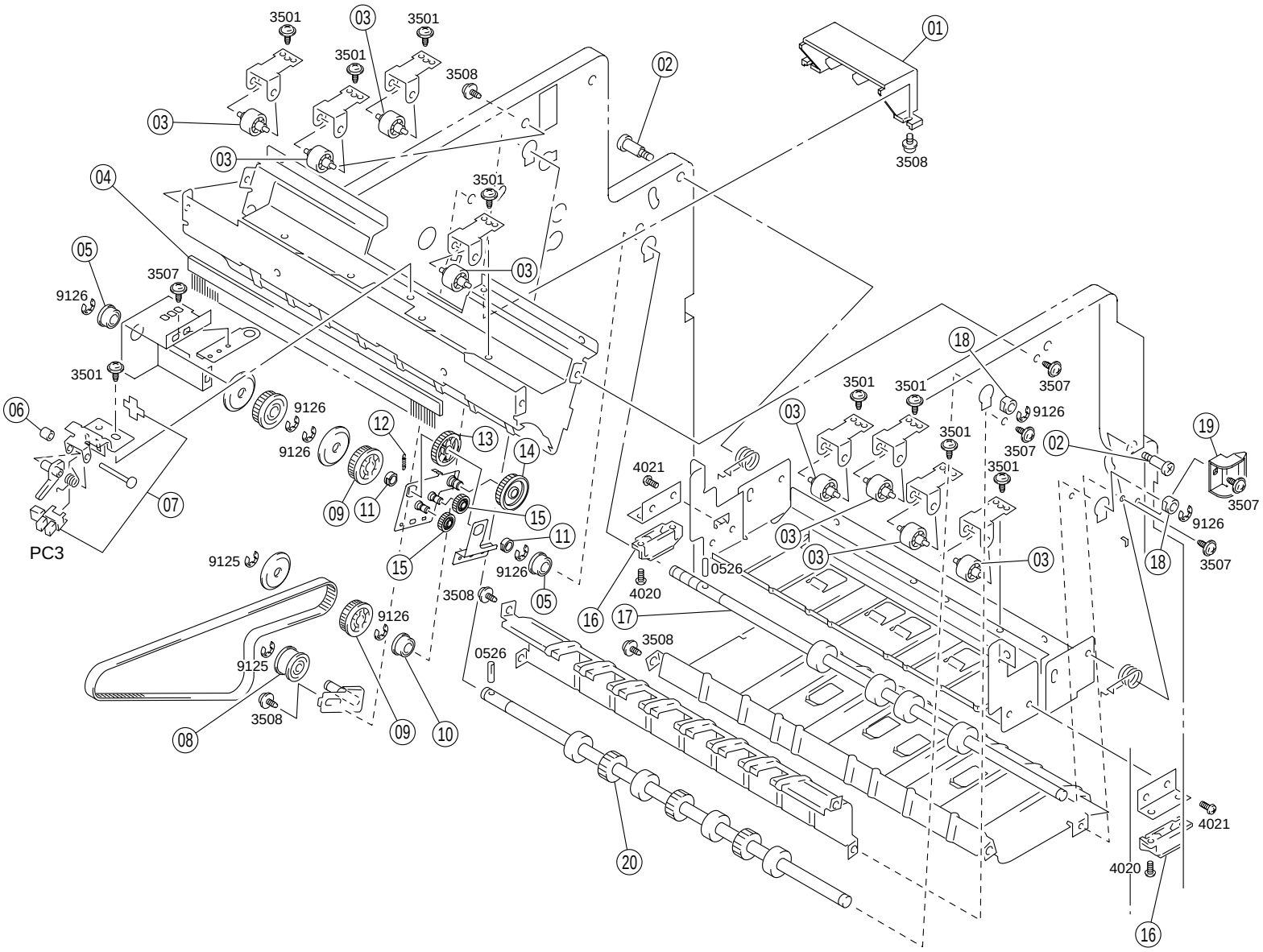
3501
03
3501
3501
3508
01
02
03
03
3508
04
3501
05
3507
9126
03
3501
18
3501
3501
3507
9126
06
9126
12
13
14
03
3501
3507
02
19
9126
4021
3501
07
09
11
15
11
03
3507
9126
PC3
15
9126
03
03
18
3507
9125
0526
4020
3508
05
16
17
9126
3508
0526
9125
3508
08
09
10
20
4021
4020
16

INDEX	PART NO.	PART NAME	REC	QTY
01	4470-2505-01	HANDLE		1
02	1100-1344-12	SHOULDER SCREW		2
03	1033-4709-01	ROLL		8
04	4425-3850-01	NEUTRALIZING BRUSH		1
05	4102-3149-01	BALL BEARING		2
06	1200-2105-06	RETAINING RING		1
07	4640-0903-01	PHOTO INTERRUPTER EXIT (PC3)		1
08	1136-2530-02	PULLEY		1
09	4470-2308-01	PULLEY 28T		2
10	1300-4342-08	BALL BEARING		1
11	1200-3131-08	BUSHING		2
12	4470-2569-01	TENSION SPRING		1
13	1300-3242-70	GEAR 30T		1
14	4470-2564-01	GEAR		1
15	1300-3312-13	GEAR 15T		2
16	4425-3372-01	MAGNET CATCH		2
17	4470-2557-01	ROLLER		1
18	1200-3131-03	BUSHING		2
19	4470-2515-01	HOOK		1
20	4470-4005-01	ROLLER		1

INDEX	PART NO.	PART NAME	REC	QTY	SFIX

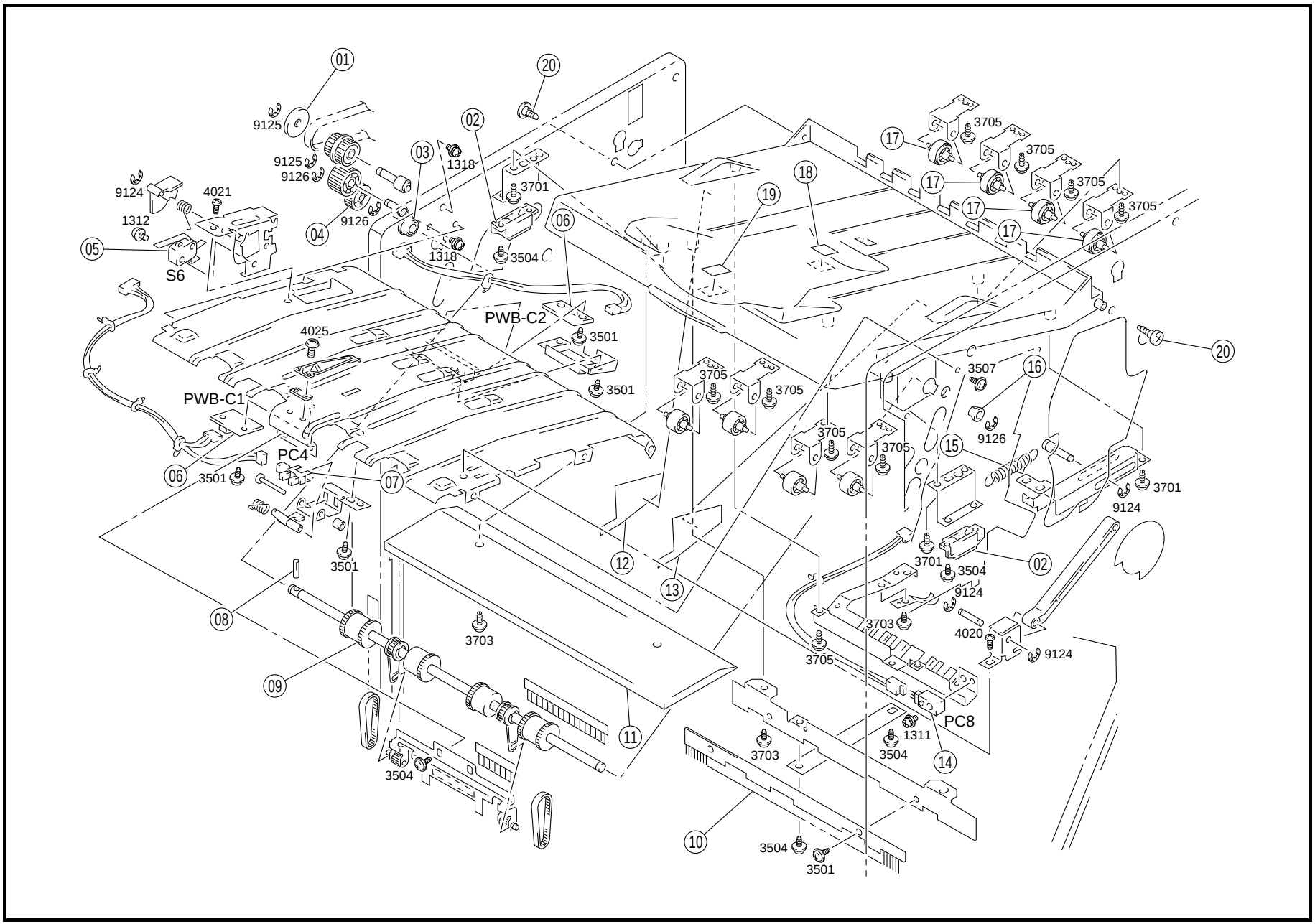
01
9125
20
02
03
1318
9125
9126
3701
9124
4021
1312
04
9126
06
05
1318
3504
S6
PWB-C2
4025
3501
3501
PWB-C1
PC4
06
3501
07
3501
08
3703
09
3504
12
13
11
10
3504
3501
3705
3705
3705
3705
3705
3705
3705
3705
17
17
17
17
18
19
3507
16
9126
15
3701
9124
3701
3504
02
9124
3703
4020
9124
3705
PC8
1311
3504
3703
14
20

INDEX	PART NO.	PART NAME	REC	QTY
01	4478-5433-01	FLANGE		1
02	4425-3366-01	MAGNET CATCH		2
03	4102-3149-01	BALL BEARING		1
04	1075-3581-01	GEAR 24T		1
05	9331-2710-11	MICRO SWITCH TRAY SET (S6)		1
06	4428-0103-01	PW BOARD-C PQ (PWB-C1.C2)		2
07	9335-1311-01	PHOTO INTERRUPTER TRAY EX (PC4)		1
08	1067-2503-01	PIN		1
09	4470-0151-03	ROLLER ASSY		1
10	4427-4502-02	NEUTRALIZING BRUSH		1
11	4470-4008-01	COVER		1
12	4470-4070-01	GUIDE		1
13	4470-4069-01	GUIDE		1
14	4485-6301-01	PHOTO INTERRUPTER TRAY (PC8)		1
15	4470-4042-02	TENSION SPRING		1
16	1200-3131-03	BUSHING		1
17	1033-4709-01	ROLL		4
18	4470-7335-01	SEAL		1
19	4470-7319-01	LABEL FN9		1
20	1100-1352-04	SHOULDER SCREW		2

INDEX	PART NO.	PART NAME	REC	QTY	SFIX

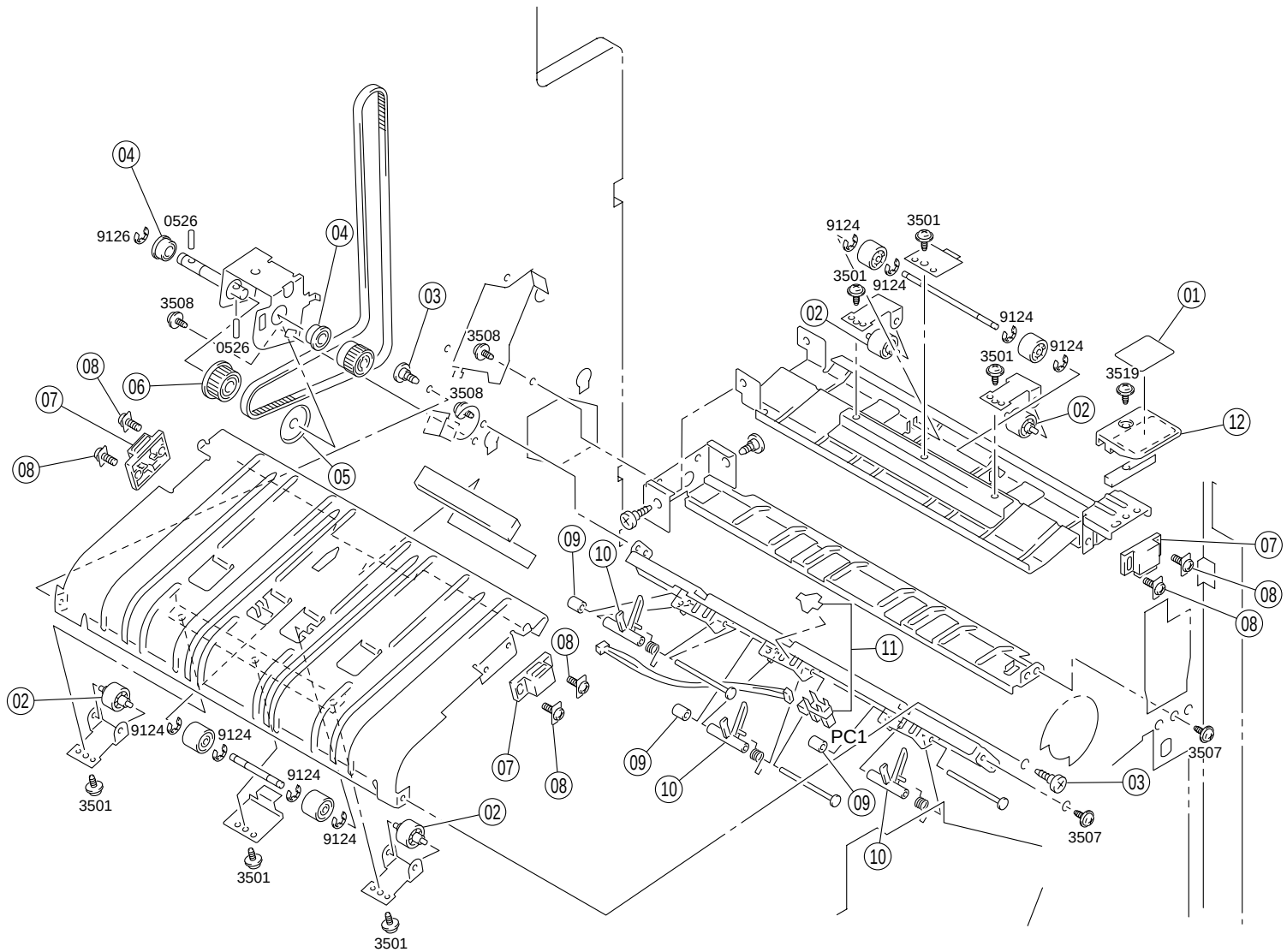
04
0526
9126
04
3508
0526
03
3508
3508
08
06
07
08
05
9124
3501
3501
9124
02
9124
9124
3501
01
3519
02
12
09
10
07
08
08
11
08
02
9124
9124
9124
3501
07
08
09
10
PC1
09
10
03
3507
3507
02
9124
3501
3501

INDEX	PART NO.	PART NAME	REC	QTY	INDEX	PART NO.	PART NAME	REC	QTY
01	4470-7326-01	LABEL FN3		1					
02	1033-4709-01	ROLL		4					
03	4426-3137-01	SHOULDER SCREW		2					
04	4102-3149-01	BALL BEARING		2					
05	1074-3986-01	FRANGE		1					
06	4470-2308-01	PULLEY 28T		1					
07	1500-2640-04	MAGNET CATCH		3					
08	1053-1324-01	TAPPING SCREW		6					
09	1200-2105-06	RETAINING RING		3					
10	4470-2111-04	ACTUATOR		3					
11	4470-0902-01	PHOTO INTERRUPTER PUNCH (PC1)		1					
12	1074-3846-01	LEVER		1					

INDEX	PART NO.	PART NAME	REC	QTY	SFIX

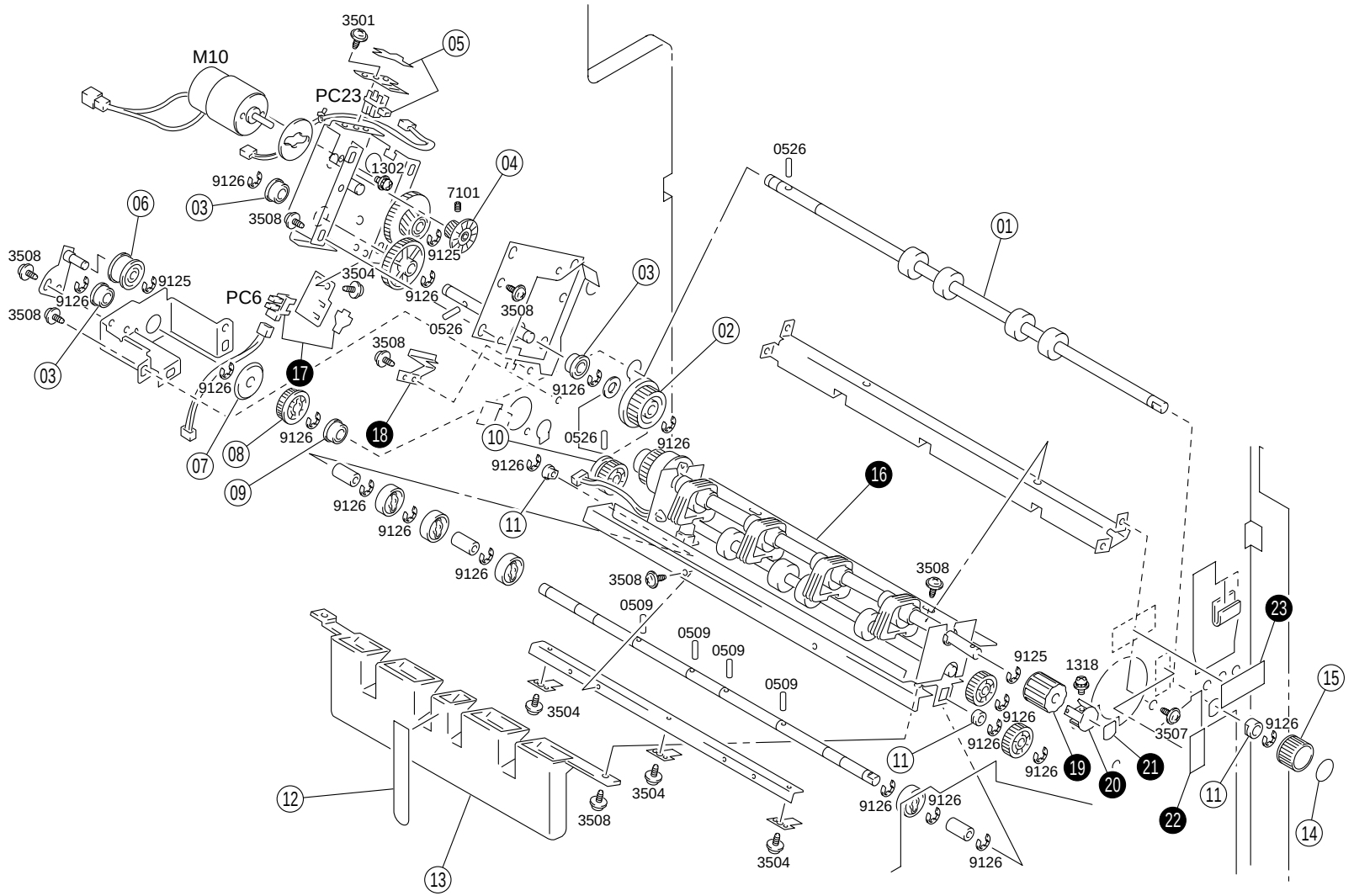
3501
05
M10
PC23
1302
04
7101
9126
03
3508
06
9125
3504
PC6
0526
01
02
17
18
10
08
07
09
11
16
0509
1318
23
15
19
20
21
22
12
13
14
3507

INDEX	PART NO.	PART NAME	REC	QTY	INDEX	PART NO.	PART NAME	REC	QTY
01	4470-2101-01	ROLLER		1					
02	4470-5048-02	GEAR 29T		1					
03	4102-3149-01	BALL BEARING		3					
04	4470-5045-01	GEAR 20T		1					
05	4640-0903-01	PHOTO INTERRUPTER PUNCH (PC23)		1					
06	1136-2530-02	PULLEY		1					
07	1074-3986-01	FRANGE		1					
08	4470-2308-01	PULLEY 28T		1					
09	1300-4342-08	BALL BEARING		1					
10	4470-5052-01	GEAR 24T		1					
11	1200-3131-03	BUSHING		3					
12	4470-5033-01	GUIDE		1					
13	4470-5030-01	GUIDE		1					
14	4470-7322-01	LABEL FN2		1					
15	4470-2127-01	KNOB		1					

INDEX	PART NO.	PART NAME	REC	QTY	SFIX
16	4470-0152-01	PUNCH UNIT		1	711, 713
16	4470-0153-12	PUNCH UNIT		1	712
16	4470-0155-01	PUNCH UNIT		1	714
17	4642-0901-01	PHOTO INTERRUPTER PUNCH (PC6)		1	712
18	4470-5061-02	PLATE SPRING		1	712
19	4470-5063-01	KNOB		1	712
20	4470-5064-01	CAP		1	712
21	4470-7348-01	LABEL POSITION		1	712
22	4470-7349-01	LABEL		1	712
23	4470-7347-01	LABEL DO NOT TURN		1	712

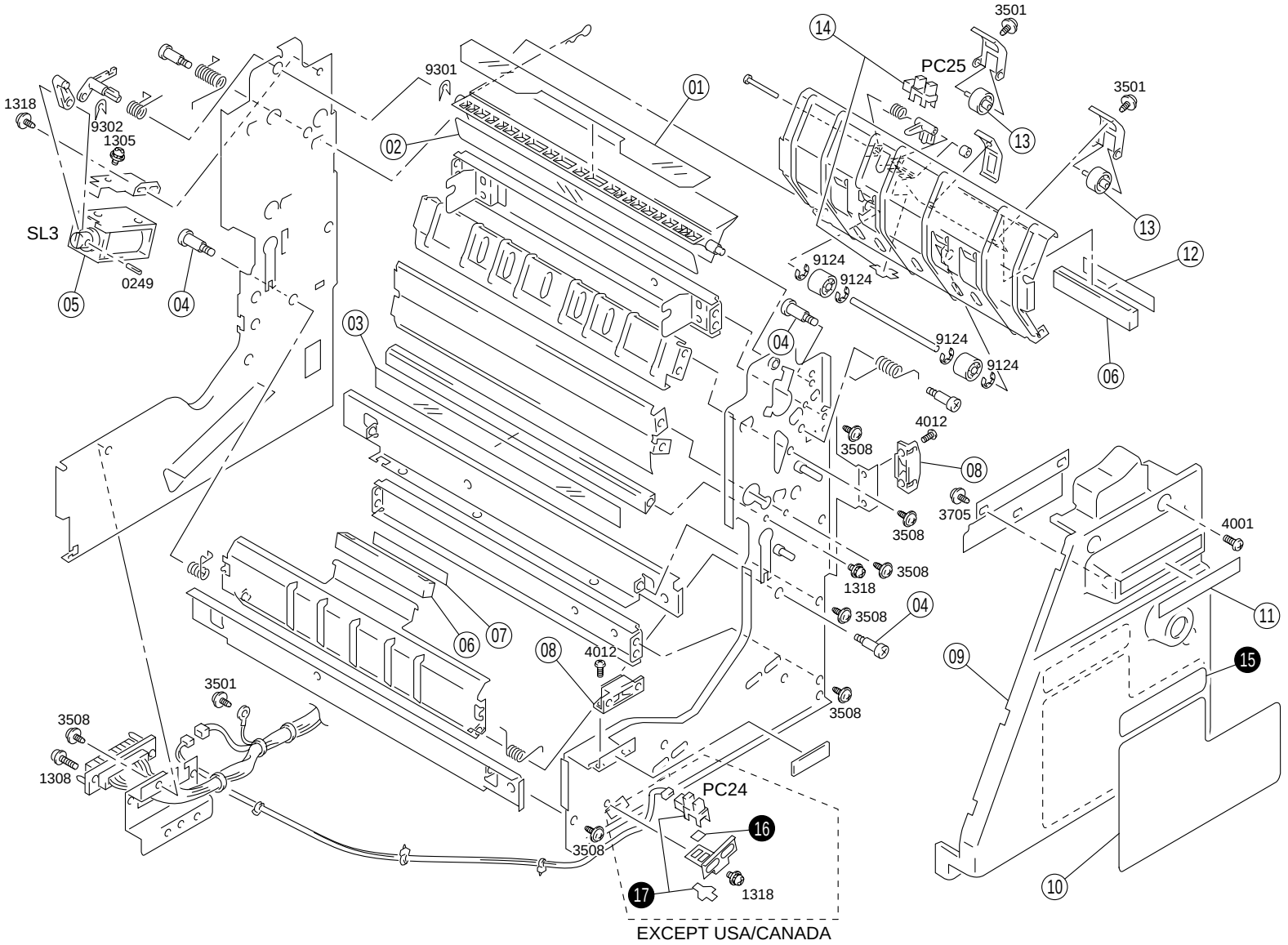
1318
9302
1305
SL3
0249
05
04
9301
01
02
03
3501
14
PC25
13
3501
13
12
9124
9124
9124
9124
06
04
4012
3508
08
3705
3508
4001
3508
1318
3508
04
11
09
15
06
07
08
4012
3508
3501
3508
1308
PC24
16
3508
17
1318
10
EXCEPT USA/CANADA

INDEX	PART NO.	PART NAME	REC	QTY	INDEX	PART NO.	PART NAME	REC	QTY
01	4470-3056-02	POLYESTER FILM		1					
02	4470-3061-01	POLYESTER FILM		1					
03	4470-3042-01	POLYESTER FILM		1					
04	1100-1344-12	SHOULDER SCREW		3					
05	9321-2710-31	SOLENOID CREASE (SL3)		1					
06	1076-3906-01	COVER		2					
07	4470-7321-01	LABEL PF5		1					
08	4425-3372-01	MAGNET CATCH		2					
09	4470-3100-02	COVER		1					
10	4470-7302-02	LABEL JAM REMOVAL		1					
11	4470-7324-01	LABEL PF2		1					
12	4470-7328-01	LABEL PF3		1					
13	1033-4709-01	ROLL		2					
14	4642-0901-01	PHOTO INTERRUPTER CREASE (PC25)		1					

INDEX	PART NO.	PART NAME	REC	QTY	SFIX
15	4470-7360-02	LABEL		1	711
15	4470-7361-01	LABEL JAM REMOVAL		1	712, 713, 714
16	4470-4696-01	POLYESTER FILM		1	711, 713, 714
17	4470-0902-01	PHOTO INTERRUPTER STOPPER (PC24)		1	711, 713, 714

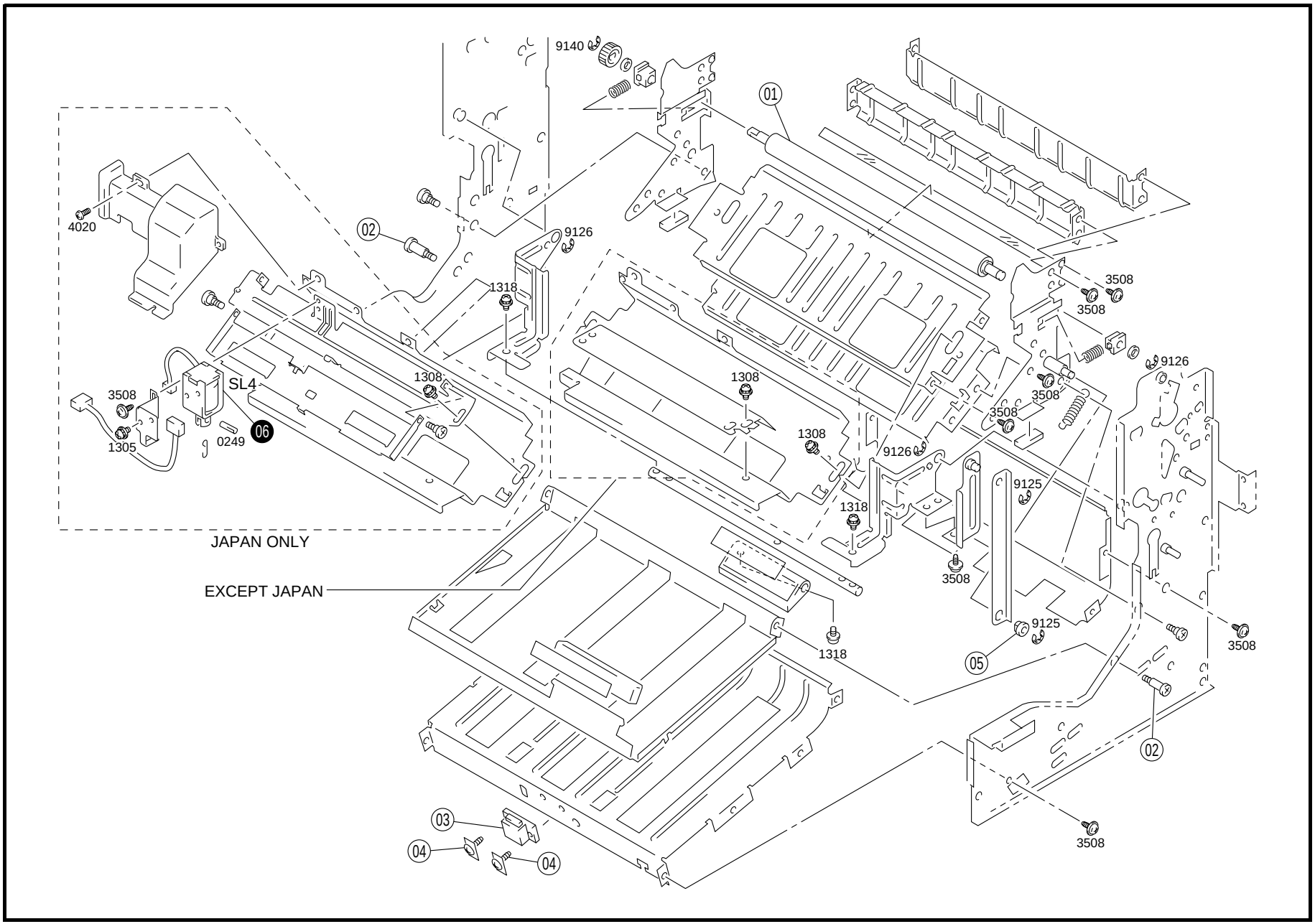
9140
01
4020
02
9126
1318
3508
3508
9126
1308
1308
SL4
3508
3508
3508
1305
0249
06
1308
9126
9125
1318
JAPAN ONLY
3508
EXCEPT JAPAN
9125
1318
05
3508
02
03
04
04
3508

INDEX	PART NO.	PART NAME	REC	QTY	INDEX	PART NO.	PART NAME	REC	QTY
01	4470-3032-13	ROLLER		1					
02	1100-1342-08	SHOULDER SCREW		2					
03	1500-2640-04	MAGNET CATCH		1					
04	1053-1324-01	TAPPING SCREW		2					
05	1200-3221-04	BUSHING		1					

INDEX	PART NO.	PART NAME	REC	QTY	SFIX
06	9321-2310-41	SOLENOID Z-FOLD (SL4)		1	711

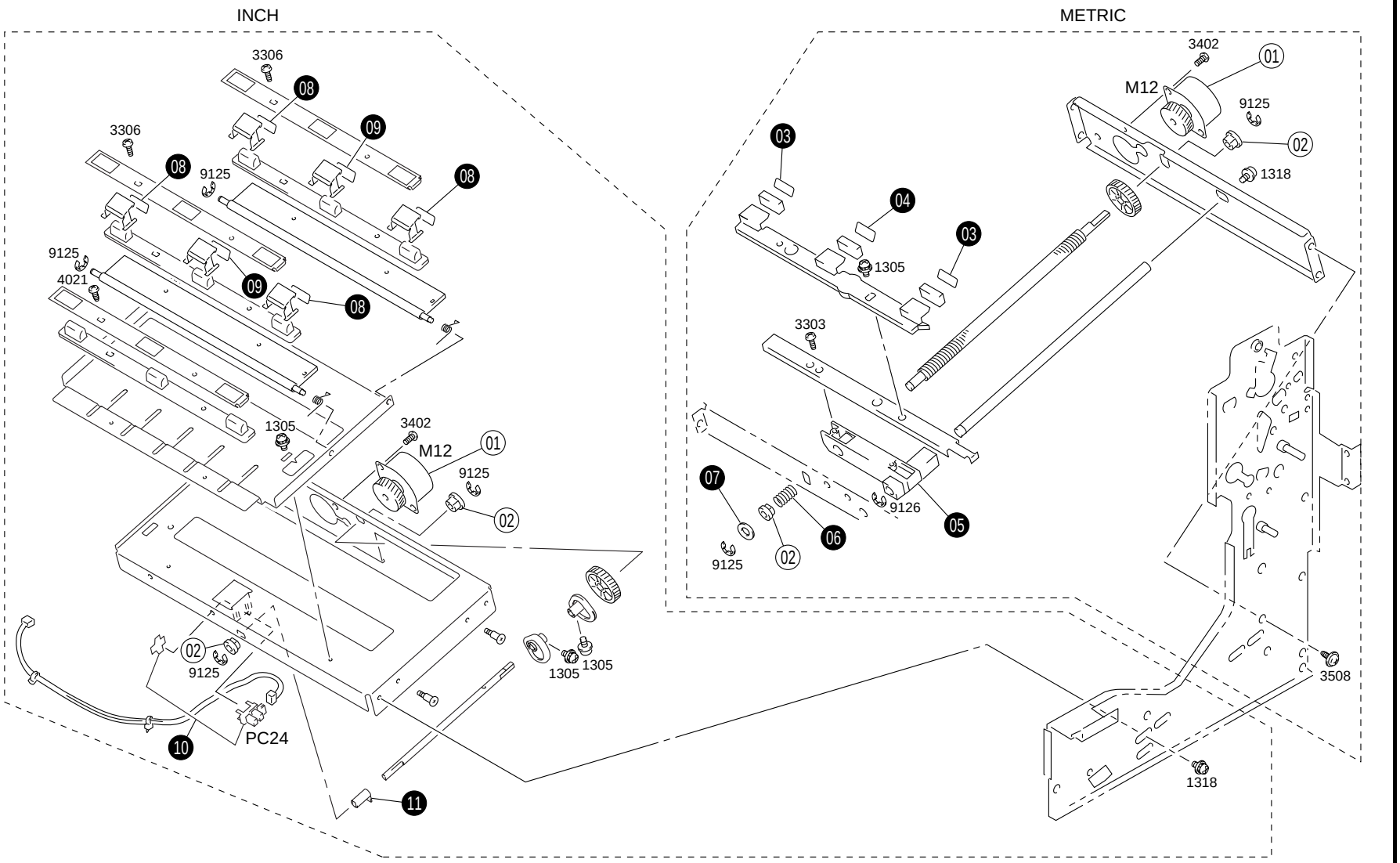
INCH
METRIC
3306
08
09
3306
08
9125
08
9125
4021
09
08
1305
3402
M12
01
9125
02
02
9125
1305
1305
PC24
10
11
3402
01
M12
9125
02
1318
03
04
1305
03
3303
07
9125
02
06
9126
05
3508
1318

INDEX	PART NO.	PART NAME	REC	QTY	INDEX	PART NO.	PART NAME	REC	QTY
01	9314-1710-51	MOTOR STOPPER (M12)		1					
02	1200-3221-04	BUSHING		2					

INDEX	PART NO.	PART NAME	REC	QTY	SFIX
03	4470-3146-01	POLYESTER FILM		2	711, 713, 714
04	4470-3145-01	POLYESTER FILM		1	711, 713, 714
05	4470-3082-02	SLIDER		1	711, 713, 714
06	4427-2204-02	PRESSURE SPRING		1	711, 713, 714
07	1200-1342-02	WASHER		1	711, 713, 714
08	4470-3146-01	POLYESTER FILM		4	712
09	4470-3145-01	POLYESTER FILM		2	712
10	4470-0902-01	PHOTO INTERRUPTER STOPPER (PC24)		1	712
11	4470-3142-01	ACTUATOR		1	712

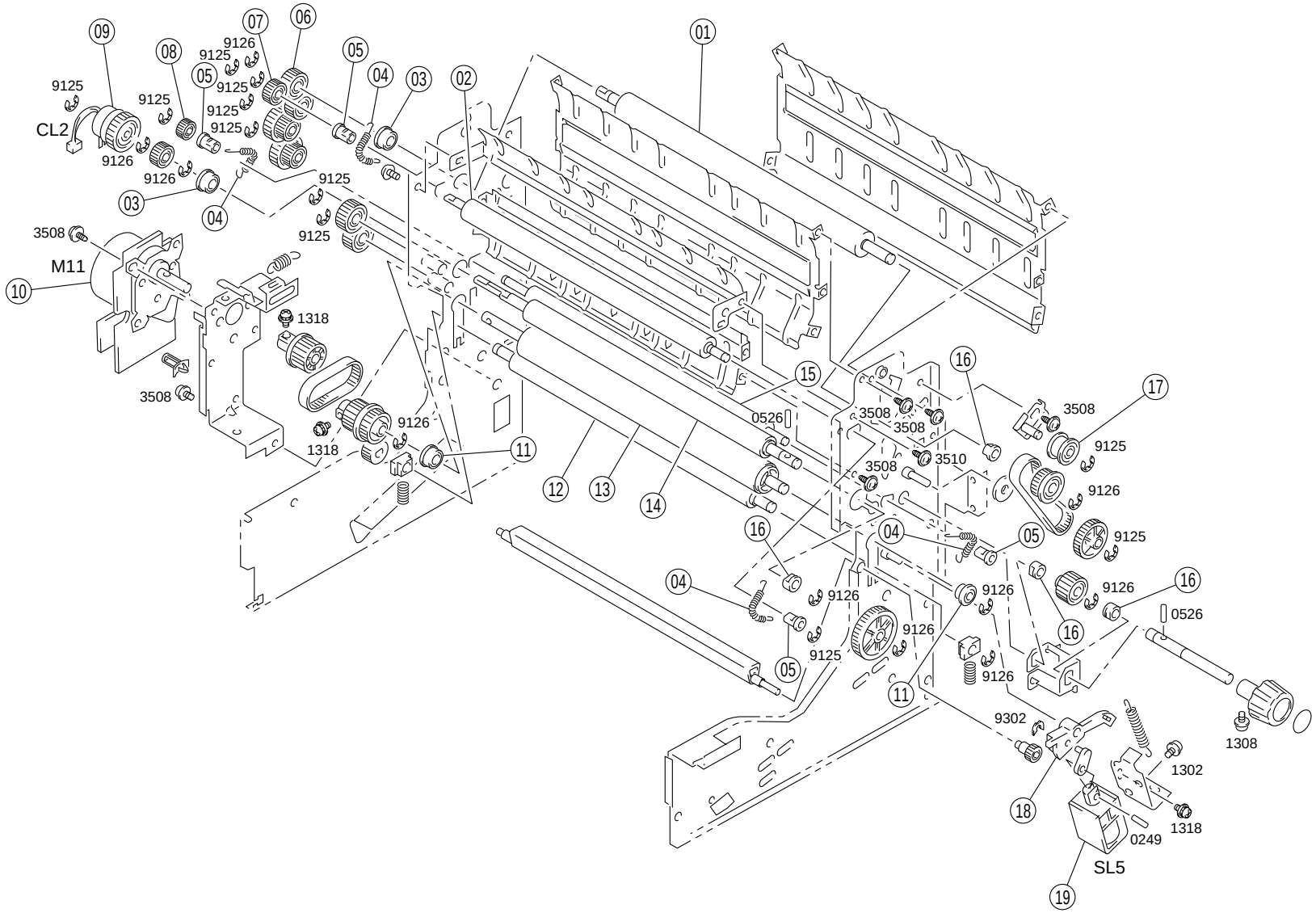
01
02
03
04
05
06
07
08
09
10
11
12
13
14
15
16
17
18
19
CL2
M11
SL5
9125
9126
3508
1318
0526
3510
9302
1308
1302
0249

INDEX	PART NO.	PART NAME	REC	QTY
01	4470-3063-01	ROLLER		1
02	4470-3043-01	ROLLER		1
03	4102-3149-01	BALL BEARING		2
04	1400-2512-15	TORSION SPRING		4
05	1200-3225-07	BUSHING		4
06	1300-3132-12	GEAR 24T		1
07	1136-3526-01	GEAR 20T		1
08	1300-3212-27	GEAR 15T		1
09	9322-1511-21	CLUTCH SKEW (CL2)		1
10	4470-6122-01	MOTOR CREASE (M11)		1
11	1300-4342-08	BALL BEARING		2
12	4470-3032-13	ROLLER		1
13	4470-3031-14	ROLLER		1
14	4470-3065-01	ROLLER		1
15	4470-3066-01	ROLLER		1
16	1200-3131-03	BUSHING		4
17	1136-2530-02	PULLEY		1
18	4470-3037-01	SEGMENT GEAR		1
19	9321-2710-21	SOLENOID HALF/Z (SL5)		1

INDEX	PART NO.	PART NAME	REC	QTY	SFIX

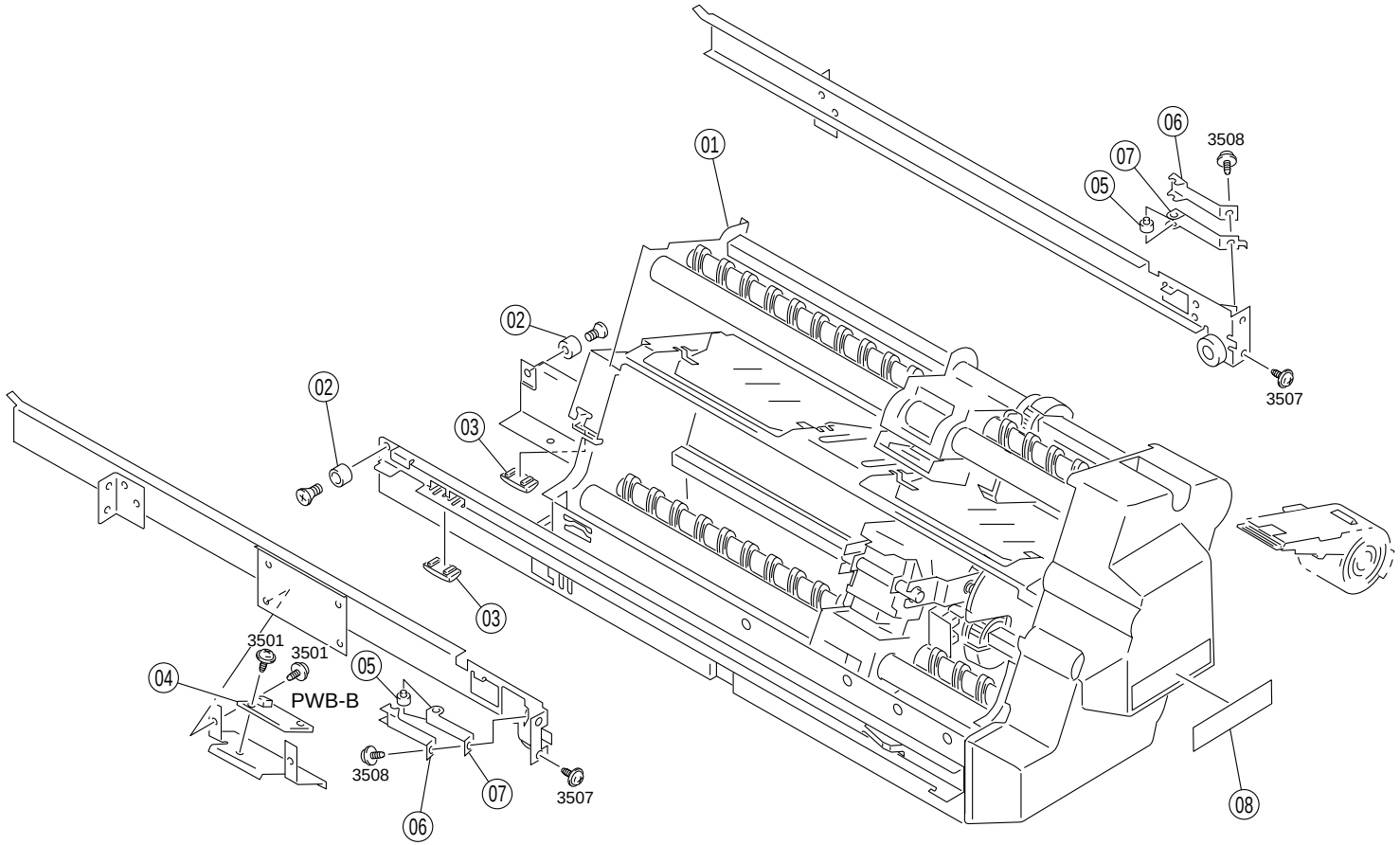
01
02
02
03
03
04
05
05
06
06
07
07
08
3501
3501
PWB-B
3507
3507
3508
3508

INDEX	PART NO.	PART NAME	REC	QTY	INDEX	PART NO.	PART NAME	REC	QTY
01	4470-4351-04	STAPLER UNIT		1					
02	1273-3002-01	ROLL		2					
03	1273-3055-01	SLIDER		2					
04	4428-0102-01	PW BOARD-B LED (PWB-B)		1					
05	1273-2017-01	ROLL		2					
06	1273-2016-01	PLATE SPRING		2					
07	1273-2014-01	HOLDER		2					
08	4470-7332-01	LABEL STAPLE		1					

INDEX	PART NO.	PART NAME	REC	QTY	SFIX

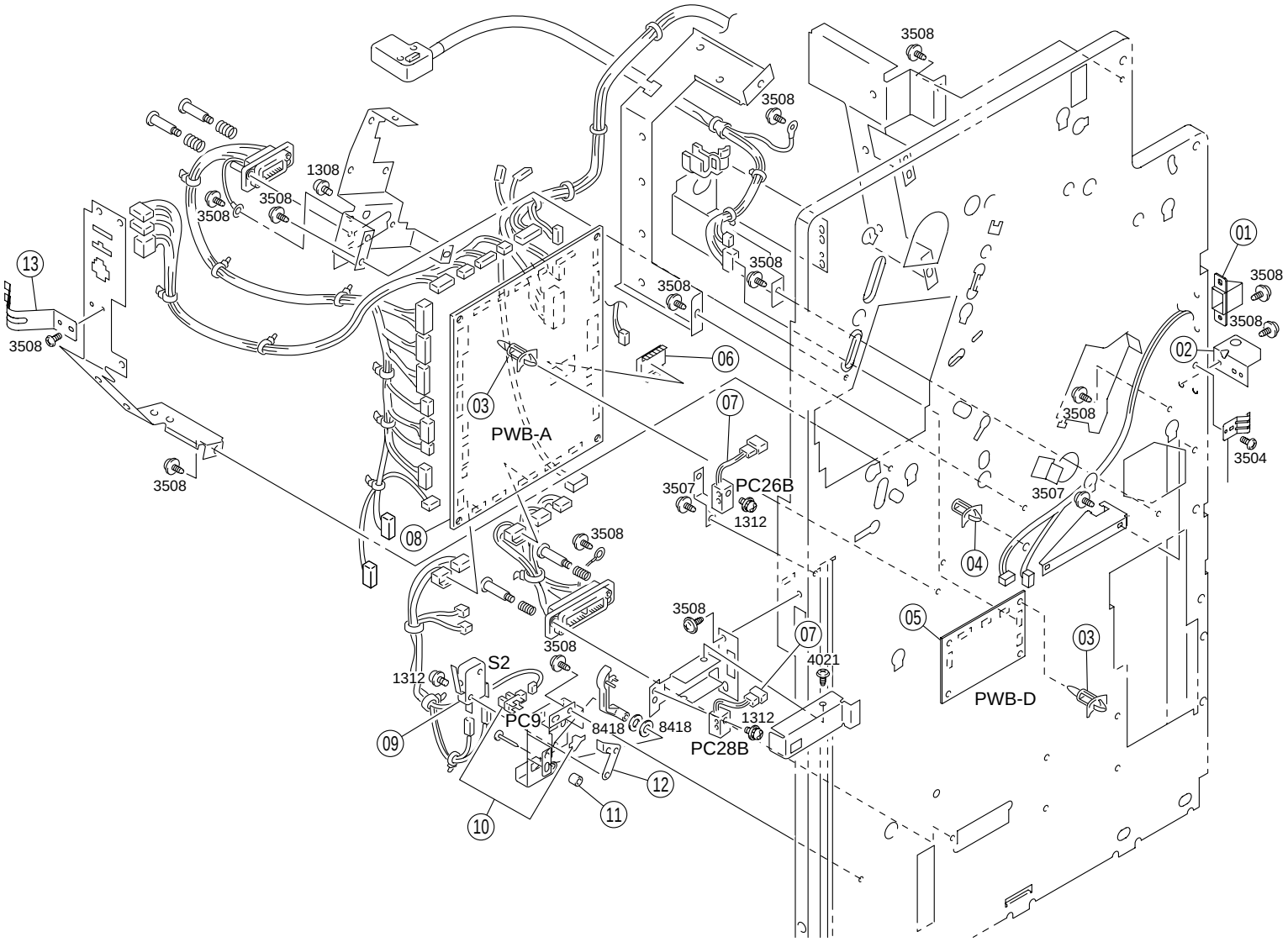
3508
3508
1308
3508
3508
13
3508
3508
3508
01
3508
3508
02
06
03
PWB-A
07
3508
3504
3508
3507
PC26B
1312
3507
08
3508
04
3508
05
07
03
3508
4021
S2
1312
PWB-D
PC9
8418
8418
1312
09
PC28B
12
11
10

INDEX	PART NO.	PART NAME	REC	QTY	INDEX	PART NO.	PART NAME	REC	QTY
01	4470-2550-01	GUIDE		1					
02	4470-2511-01	HINGE		1					
03	9384-1900-58	PWB SUPPORT 12.7H		8					
04	9384-1120-21	PW BOARD SPACER		4					
05	4470-0110-01	PWB ASSY POWER SU (PWB-D)		1					
06	4470-6604-02	IC		1					
07	4470-6302-01	PHOTO INTERRUPTER (PC26B.28B)		2					
08	4470-0111-01	PWB ASSY CONTROL (PWB-A)	RP	1					
09	9331-2310-11	MICROSWITCH ELEVAT LW (S2)		1					
10	4470-0902-01	PHOTO INTERRUPTER TRAY LW (PC9)		1					
11	1200-2105-06	RETAINING RING		1					
12	1076-1203-02	PLATE NUT		1					
13	4427-2205-02	GROUND PLATE		1					

INDEX	PART NO.	PART NAME	REC	QTY	SFIX

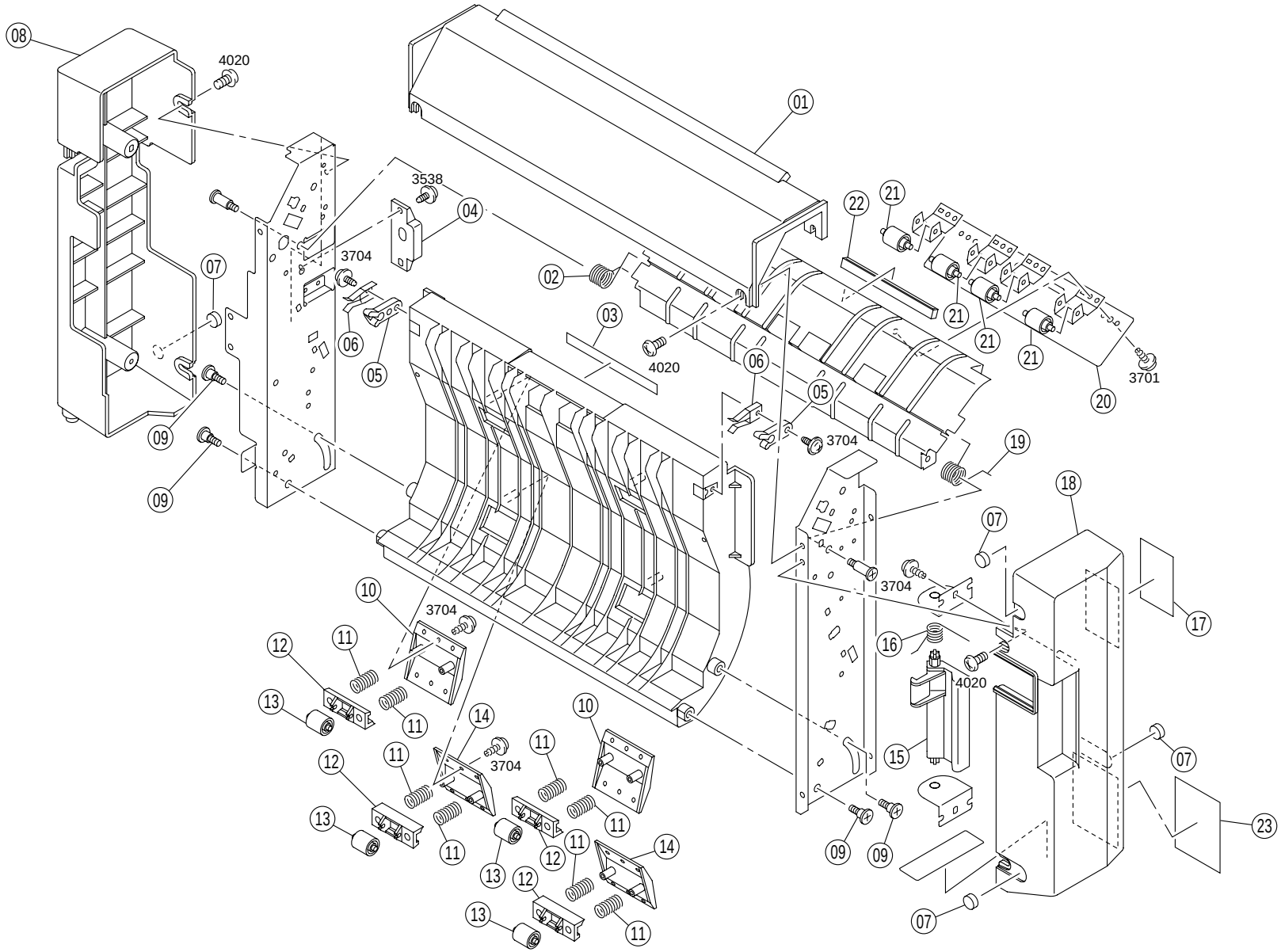
08
4020
01
3538
04
3704
07
02
03
06
05
4020
06
05
3704
22
21
21
21
21
20
3701
09
09
19
18
07
3704
17
10
3704
12
11
16
4020
13
11
14
10
11
3704
12
11
15
07
13
11
11
12
11
14
13
12
09
09
23
13
11
07

INDEX	PART NO.	PART NAME	REC	QTY
01	4470-2503-01	COVER		1
02	4470-2549-01	TORSION SPRING		1
03	4470-2598-02	LABEL		1
04	4643-2131-02	GUIDE		1
05	0704-4127-01	PLASTIC CATCH		2
06	4410-3209-01	SET PLATE		2
07	4643-1009-02	STOPPER		4
08	4470-2502-02	COVER		1
09	1281-2103-01	SHOULDER SCREW		4
10	4470-2586-01	GUIDE		2
11	4470-2589-01	PRESSURE SPRING		8
12	1250-4408-02	HOLDER		4
13	1250-4410-01	ROLL		4
14	4470-2587-01	GUIDE		2
15	4470-2514-01	HANDLE		1
16	4470-2512-01	TORSION SPRING		1
17	4470-2599-01	LABEL		1
18	4470-2501-01	COVER		1
19	4470-2548-01	TORSION SPRING		1
20	4470-2552-01	FILM		1
21	4417-3412-02	ROLL		4
22	1076-3906-01	COVER		1
23	4470-7384-01	LABEL		1

INDEX	PART NO.	PART NAME	REC	QTY	SFIX

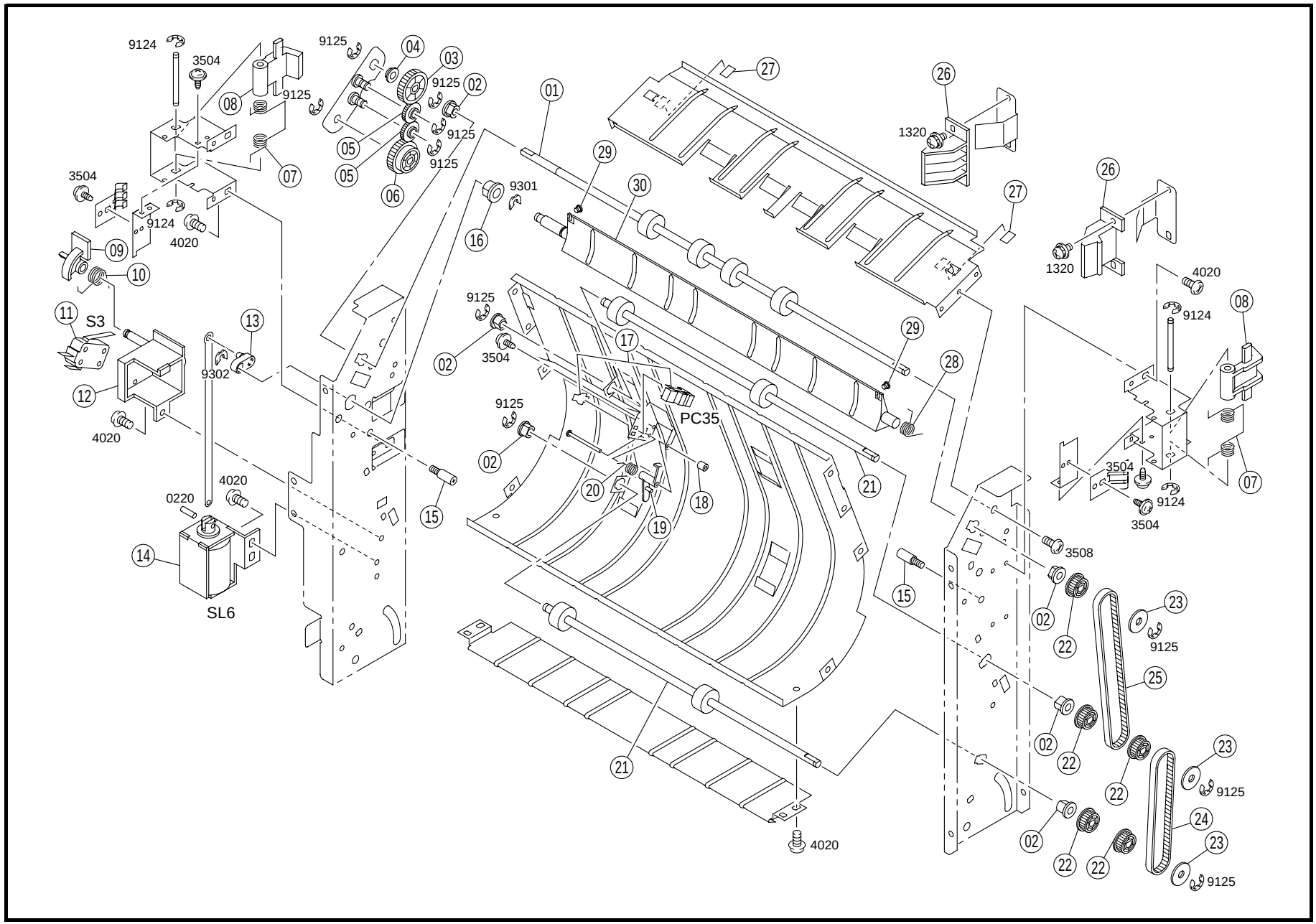
9124
3504
9125
04
03
02
08
9125
9125
01
27
26
1320
05
05
9125
07
06
29
30
3504
9124
4020
09
10
9301
16
27
26
1320
4020
9124
08
11
S3
13
9125
02
3504
17
29
28
12
9302
9125
PC35
4020
02
20
18
21
3504
9124
07
0220
4020
15
19
3504
14
3508
15
SL6
02
22
23
9125
25
02
22
22
23
9125
21
24
02
22
22
23
9125
4020

INDEX	PART NO.	PART NAME	REC	QTY
01	4470-2581-01	ROLLER		1
02	1200-3221-07	BUSHING		6
03	4470-2565-01	GEAR		1
04	4470-2573-01	COLLAR		1
05	1300-3312-13	GEAR 15T		2
06	4470-2566-01	GEAR		1
07	4470-2524-01	TORSION SPRING		2
08	4643-2103-01	CATCH		2
09	4643-2119-02	ACTUATOR		1
10	4643-2112-01	TORSION SPRING		1
11	9331-2710-11	MICRO SWITCH SET (S3)		1
12	4470-2522-01	BRACKET		1
13	4470-2595-01	LEVER		1
14	4611-6201-01	SOLENOID SWITCH (SL6)		1
15	1100-1223-06	SHOULDER SCREW		2
16	1274-3603-01	BUSHING		1
17	4470-0902-01	PHOTO INTERRUPTER ROUTE (PC35)		1
18	1200-2105-06	RETAINING RING		1

INDEX	PART NO.	PART NAME	REC	QTY
19	4470-2113-02	LEVER		1
20	4470-2114-01	TORSION SPRING		1
21	4470-2582-01	ROLLER		2
22	4470-2578-01	PULLEY		5
23	4428-2413-01	FLANGE		3
24	4470-2577-01	TIMING BELT		1
25	4470-2576-01	TIMING BELT		1
26	4470-2527-01	PAWL		2
27	4478-3505-01	CUSHION		2
28	4470-2592-01	TORSION SPRING		1
29	4643-3215-01	BUSHING		2
30	4470-2591-02	PAWL		1

INDEX	PART NO.	PART NAME	REC	QTY	SFIX

01 - 03 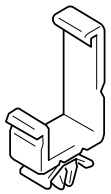	09 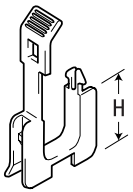	18 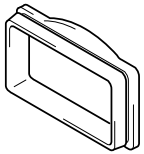					
04 	10 , 11 	19 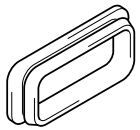					
05 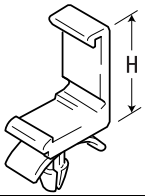	12 , 13 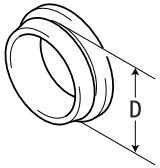	20 					
06 , 07 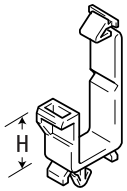	14 - 16 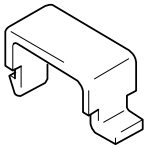	21 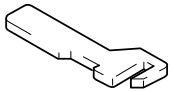					
08 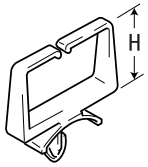	17 	22 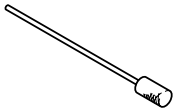					

INDEX	PART NO.	PART NAME	REC	QTY
01	9384-1310-91	WIRING SADDLE 18.5H		57
02	9384-1311-01	WIRING SADDLE 27H		26
03	9384-1311-21	WIRING SADDLE 16.8H		31
04	9384-1310-11	WIRING SADDLE 5.2H		3
05	9384-1900-53	WIRING SADDLE 18.7H		1
06	9384-1921-21	WIRING SADDLE 15.2H		8
07	9384-1921-31	WIRING SADDLE 17.3H		3
08	9384-1310-81	WIRING SADDLE 6.4H		17
09	9384-2010-31	EDGE COVER 15.4H		6
10	9384-2010-21	EDGE COVER 8.5H		15
11	9384-2800-36	EDGE COVER 15.0H		1
12	0721-4203-12	COLLAR 17D		10
13	0722-4913-01	INSULATING MEMBER		4
14	1053-4432-01	CORD CLAMP		6
15	1053-4812-01	CORD CLAMP		3
16	1065-5872-01	CORD CLAMP		6
17	9384-1821-41	CABLE TIE		2
18	1038-4006-01	INSULATING MEMBER		2
19	1050-4805-01	INSULATING MEMBER		1
20	1031-4403-01	GROMMET		1
21	1075-7906-01	JIG SAFETY SWITCH	RP	1
22	4427-7108-03	JIG GEAR POSITION	RP	1

INDEX	PART NO.	PART NAME	REC	QTY	SFIX

INDEX	PART NO.	PART NAME	ILLUST
0220 0249	9754-3014-08 9754-3012-50	SPRING ROLL PIN	
0501 0508 0509 0526	9752-3016-50 9752-2010-50 9752-2012-50 9752-2016-50	PIN	
1164	9642-0412-13	SCREW	
1210 1252 1277	9644-0308-13 9644-2605-13 9644-2606-13	SCREW	
1302 1305 1308 1311 1312 1318 1319 1320 1353	9646-0305-13 9646-0306-13 9646-0308-13 9646-0314-13 9646-0316-13 9646-0408-13 9646-0410-07 9646-0410-13 9646-0330-13	SCREW	
1603 1623 1628	9654-0306-01 9654-0408-01 9654-0410-01	SCREW	
3303 3306	9732-0306-13 9732-0310-13	TAPPING SCREW	
3402	9733-0306-13	TAPPING SCREW	

INDEX	PART NO.	PART NAME	ILLUST
3501 3504 3507 3508 3510 3519	9735-0306-13 9735-0308-13 9735-0408-07 9735-0408-13 9735-0412-13 9735-0312-13	TAPPING SCREW	
3701 3703 3704 3705 3709 3726	9739-0408-13 9739-0412-13 9739-0308-13 9739-0306-13 9739-0310-13 9739-0408-14	TAPPING SCREW	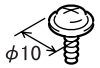
3906 3920	9742-0306-13 9742-0408-14	TAPPING SCREW	
4001 4005 4012 4020 4021 4025 4027	9743-0408-01 9743-0408-13 9743-0306-13 9743-0408-14 9743-0308-14 9743-0306-14 9743-0406-14	TAPPING SCREW	
5614	9736-0670-13	BOLT	
5702	9734-0650-13	BOLT	
7101 7116	9684-0303-08 9684-0305-08	SET SCREW	
8302 8308	9712-0400-13 9712-0600-13	WASHER	
8414 8418	9715-0400-13 9715-0300-13	WASHER	

INDEX	PART NO.	PART NAME	ILLUST
9122 9124 9125 9126 9140 9141 9155	9721-0800-13 9721-0300-13 9721-0400-13 9721-0600-13 9721-0500-13 9721-0200-13 9721-0250-13	RETAINING RING	
9301 9302	1066-1151-01 4425-3001-01	RETAINING RING	

PART NO.	FIG.	INDEX	QTY		PART NO.	FIG.	INDEX	QTY		PART NO.	FIG.	INDEX	QTY		PART NO.	FIG.	INDEX	QTY	
0704-4127-01	22	05	2		1200-3225-07	19	05	4		4470-0152-01	15	16	1		4470-2550-01	21	01	1	
0721-4203-12	24	12	10		1200-3235-04	08	07	4		4470-0153-12	15	16	1		4470-2552-01	22	20	1	
0722-4913-01	24	13	4		1200-3235-04	10	04	2		4470-0155-01	15	16	1		4470-2557-01	12	17	1	
0996-5627-01	08	16	1		1250-4408-02	22	12	4		4470-0159-01	10	13	1		4470-2564-01	12	14	1	
0996-5627-01	09	16	1		1250-4410-01	22	13	4		4470-0176-01	04	10	1		4470-2565-01	23	03	1	
1031-4403-01	24	20	1		1257-4401-01	11	15	4		4470-0177-01	04	10	1		4470-2566-01	23	06	1	
1033-4709-01	07	16	4		1273-2014-01	20	07	2		4470-0178-02	01	15	1		4470-2569-01	12	12	1	
1033-4709-01	12	03	8		1273-2016-01	20	06	2		4470-0179-02	01	15	1		4470-2573-01	23	04	1	
1033-4709-01	13	17	4		1273-2017-01	20	05	2		4470-0234-01	03	09	1		4470-2576-01	23	25	1	
1033-4709-01	14	02	4		1273-3002-01	20	02	2		4470-0752-01	06	03	1		4470-2577-01	23	24	1	
1033-4709-01	16	13	2		1273-3055-01	20	03	2		4470-0752-01	09	14	1		4470-2578-01	23	22	5	
1038-4006-01	24	18	2		1274-2611-01	05	04	2		4470-0753-01	11	01	1		4470-2579-01	01	14	1	
1050-4805-01	24	19	1		1274-3603-01	23	16	1		4470-0754-01	04	06	1		4470-2580-01	01	14	1	
1052-4437-01	07	09	1		1281-2103-01	22	09	4		4470-0755-01	10	06	1		4470-2581-01	23	01	1	
1053-1324-01	02	02	4		1300-3132-12	19	06	1		4470-0757-01	05	06	1		4470-2582-01	23	21	2	
1053-1324-01	14	08	6		1300-3212-27	19	08	1		4470-0902-01	04	03	3		4470-2586-01	22	10	2	
1053-1324-01	17	04	2		1300-3242-70	12	13	1		4470-0902-01	05	05	6		4470-2587-01	22	14	2	
1053-3103-01	01	13	2		1300-3312-13	12	15	2		4470-0902-01	06	01	1		4470-2589-01	22	11	8	
1053-4432-01	24	14	6		1300-3312-13	23	05	2		4470-0902-01	07	10	1		4470-2591-02	23	30	1	
1053-4812-01	24	15	3		1300-4342-08	07	03	1		4470-0902-01	09	12	1		4470-2592-01	23	28	1	
1065-5872-01	24	16	6		1300-4342-08	12	10	1		4470-0902-01	10	01	2		4470-2595-01	23	13	1	
1067-2503-01	08	05	1		1300-4342-08	15	09	1		4470-0902-01	11	02	2		4470-2598-02	22	03	1	
1067-2503-01	10	02	1		1300-4342-08	19	11	2		4470-0902-01	14	11	1		4470-2599-01	22	17	1	
1067-2503-01	13	08	1		1400-2143-14	08	02	1		4470-0902-01	16	17	1		4470-2603-01	08	04	1	
1074-3846-01	14	12	1		1400-2512-15	19	04	4		4470-0902-01	18	10	1		4470-2604-01	08	03	1	
1074-3986-01	14	05	1		1500-2521-21	11	08	4		4470-0902-01	21	10	1		4470-2604-01	10	14	1	
1074-3986-01	15	07	1		1500-2640-04	02	01	2		4470-0902-01	23	17	1		4470-2605-01	08	12	1	
1075-2663-01	07	04	1		1500-2640-04	14	07	3		4470-1001-03	01	01	1		4470-2611-02	08	11	4	
1075-3056-01	06	11	1		1500-2640-04	17	03	1		4470-1002-02	01	04	1		4470-3020-01	02	03	4	
1075-3581-01	13	04	1		4102-3149-01	06	08	2		4470-1003-02	01	03	1		4470-3031-14	19	13	1	
1075-7906-01	24	21	1		4102-3149-01	07	06	3		4470-1004-05	01	09	2		4470-3032-13	17	01	1	
1076-1203-02	10	07	1		4102-3149-01	08	09	2		4470-1011-04	01	12	1		4470-3032-13	19	12	1	
1076-1203-02	21	12	1		4102-3149-01	09	05	3		4470-1054-01	01	10	2		4470-3037-01	19	18	1	
1076-3906-01	16	06	2		4102-3149-01	10	09	1		4470-2035-01	03	15	1		4470-3042-01	16	03	1	
1076-3906-01	22	22	1		4102-3149-01	11	16	2		4470-2043-01	03	05	1		4470-3043-01	19	02	1	
1100-1223-06	23	15	2		4102-3149-01	12	05	2		4470-2044-01	03	02	1		4470-3056-02	16	01	1	
1100-1342-08	17	02	2		4102-3149-01	13	03	1		4470-2101-01	15	01	1		4470-3061-01	16	02	1	
1100-1344-12	12	02	2		4102-3149-01	14	04	2		4470-2102-02	07	11	1		4470-3063-01	19	01	1	
1100-1344-12	16	04	3		4102-3149-01	15	03	3		4470-2111-04	14	10	3		4470-3065-01	19	14	1	
1100-1352-04	08	10	2		4102-3149-01	19	03	2		4470-2113-02	23	19	1		4470-3066-01	19	15	1	
1100-1352-04	10	03	2		4410-2102-01	03	03	2		4470-2114-01	23	20	1		4470-3082-02	18	05	1	
1100-1352-04	13	20	2		4410-2319-01	03	07	2		4470-2127-01	08	13	2		4470-3100-02	16	09	1	
1134-0107-01	11	05	1		4410-3209-01	22	06	2		4470-2127-01	15	15	1		4470-3142-01	18	11	1	
1136-2530-02	06	07	1		4417-2604-01	03	04	2		4470-2308-01	09	06	2		4470-3145-01	18	04	1	
1136-2530-02	07	01	4		4417-3412-02	22	21	4		4470-2308-01	12	09	2		4470-3145-01	18	09	2	
1136-2530-02	09	10	1		4425-3366-01	13	02	2		4470-2308-01	14	06	1		4470-3146-01	18	03	2	
1136-2530-02	12	08	1		4425-3372-01	12	16	2		4470-2308-01	15	08	1		4470-3146-01	18	08	4	
1136-2530-02	15	06	1		4425-3372-01	16	08	2		4470-2345-01	09	08	1		4470-4005-01	12	20	1	
1136-2530-02	19	17	1		4425-3729-02	11	07	1		4470-2347-02	06	06	1		4470-4006-02	07	12	1	
1136-3526-01	19	07	1		4425-3799-01	10	05	1		4470-2369-01	09	09	1		4470-4008-01	13	11	1	
1200-1342-02	18	07	1		4425-3850-01	12	04	1		4470-2501-01	22	18	1		4470-4016-01	09	01	1	
1200-1462-02	07	14	2		4426-3137-01	07	15	1		4470-2502-02	22	08	1		4470-4042-02	13	15	1	
1200-2105-06	12	06	1		4426-3137-01	14	03	2		4470-2503-01	22	01	1		4470-4069-01	13	13	1	
1200-2105-06	14	09	3		4427-1406-01	03	06	1		4470-2505-01	12	01	1		4470-4070-01	13	12	1	
1200-2105-06	21	11	1		4427-2204-02	04	04	1		4470-2506-01	01	05	1		4470-4071-01	10	11	1	
1200-2105-06	23	18	1		4427-2204-02	18	06	1		4470-2511-01	21	02	1		4470-4106-01	11	13	2	
1200-3131-03	07	13	2		4427-2205-02	21	13	1		4470-2512-01	22	16	1		4470-4107-01	11	09	2	
1200-3131-03	08	06	6		4427-2612-01	03	08	1		4470-2514-01	22	15	1		4470-4108-01	11	14	2	
1200-3131-03	09	04	3		4427-3613-01	02	05	1		4470-2515-01	12	19	1		4470-4134-01	01	07	8	
1200-3131-03	10	15	1		4427-4117-01	03	14	2		4470-2522-01	23	12	1		4470-4149-01	11	17	1	
1200-3131-03	11	04	2		4427-4502-02	13	10	1		4470-2524-01	23	07	2		4470-4151-01	11	18	1	
1200-3131-03	12	18	2		4427-7108-03	24	22	1		4470-2525-02	03	10	1		4470-4153-01	11	03	1	
1200-3131-03	13	16	1		4428-0102-01	09	15	1		4470-2526-01	03	12	1		4470-4190-01	11	11	1	
1200-3131-03	15	11	3		4428-0102-01	20	04	1		4470-2527-01	23	26	2		4470-4191-01	11	06	1	
1200-3131-03	19	16	4		4428-0103-01	13	06	2		4470-2531-01	03	01	1		4470-4192-01	11	10	1	
1200-3131-08	12	11	2		4428-2413-01	23	23	3		4470-2532-01	03	13	1		4470-4193-01	11	12	1	
1200-3201-08	04	05	2		4470-0102-01	01	08	1		4470-2537-01	04	02	1		4470-4324-01	09	07	1	
1200-3221-04	17	05	1		4470-0110-01	21	05	1		4470-2538-01	04	01	1		4470-4330-01	09	03	1	
1200-3221-04	18	02	2		4470-0111-01	21	08	1		4470-2548-01	22	19	1		4470-4331-01	09	02	1	
1200-3221-07	23	02	6		4470-0151-03	13	09	1		4470-2549-01	22	02	1		4470-4351-04	20	01	1	

PART NO.	FIG.	INDEX	QTY		PART NO.	FIG.	INDEX	QTY		PART NO.	FIG.	INDEX	QTY		PART NO.	FIG.	INDEX	QTY	
4470-4606-02	05	01	1		4643-2103-01	23	08	2											
4470-4622-02	06	10	1		4643-2108-01	03	11	1											
4470-4623-01	06	09	1		4643-2112-01	23	10	1											
4470-4633-01	06	04	2		4643-2119-02	23	09	1											
4470-4638-01	06	02	1		4643-2131-02	22	04	1											
4470-4638-01	09	11	1		4643-3215-01	23	29	2											
4470-4641-01	06	05	2		9314-1710-41	09	13	1											
4470-4679-13	05	02	1		9314-1710-51	18	01	1											
4470-4680-13	05	03	1		9314-1710-61	05	07	1											
4470-4696-01	04	08	1		9321-2310-41	07	05	1											
4470-4696-01	16	16	1		9321-2310-41	08	01	1											
4470-5030-01	15	13	1		9321-2310-41	17	06	1											
4470-5033-01	15	12	1		9321-2710-21	19	19	1											
4470-5035-01	02	04	2		9321-2710-31	16	05	1											
4470-5045-01	15	04	1		9322-1310-61	07	08	1											
4470-5048-02	15	02	1		9322-1310-71	07	02	1											
4470-5052-01	15	10	1		9322-1511-21	19	09	1											
4470-5061-02	15	18	1		9331-2310-11	10	08	1											
4470-5063-01	15	19	1		9331-2310-11	21	09	1											
4470-5064-01	15	20	1		9331-2710-11	02	08	2											
4470-6121-01	07	07	1		9331-2710-11	04	07	1											
4470-6122-01	19	10	1		9331-2710-11	13	05	1											
4470-6301-01	02	06	2		9331-2710-11	23	11	1											
4470-6301-01	10	10	1		9335-1311-01	13	07	1											
4470-6302-01	10	12	1		9384-1120-21	21	04	4											
4470-6302-01	21	07	2		9384-1310-11	24	04	3											
4470-6604-02	21	06	1		9384-1310-81	24	08	17											
4470-7302-02	16	10	1		9384-1310-91	24	01	57											
4470-7306-03	04	09	1		9384-1311-01	24	02	26											
4470-7307-03	04	09	1		9384-1311-21	24	03	31											
4470-7309-01	01	16	1		9384-1821-41	24	17	2											
4470-7310-01	01	17	1		9384-1900-53	24	05	1											
4470-7311-01	01	16	1		9384-1900-58	21	03	8											
4470-7312-01	01	17	1		9384-1921-21	24	06	8											
4470-7313-01	01	17	1		9384-1921-31	24	07	3											
4470-7314-01	01	17	1		9384-2010-21	24	10	15											
4470-7315-01	01	16	1		9384-2010-31	24	09	6											
4470-7319-01	13	19	1		9384-2800-36	24	11	1											
4470-7321-01	16	07	1																
4470-7322-01	15	14	1																
4470-7323-01	08	14	1																
4470-7324-01	16	11	1																
4470-7326-01	14	01	1																
4470-7327-01	08	15	1																
4470-7328-01	16	12	1																
4470-7332-01	20	08	1																
4470-7333-01	08	17	1																
4470-7333-01	09	17	1																
4470-7334-01	01	02	1																
4470-7335-01	13	18	1																
4470-7341-01	01	11	1																
4470-7347-01	15	23	1																
4470-7348-01	15	21	1																
4470-7349-01	15	22	1																
4470-7360-02	16	15	1																
4470-7361-01	16	15	1																
4470-7383-01	01	06	1																
4470-7384-01	22	23	1																
4478-3505-01	23	27	2																
4478-5433-01	08	08	1																
4478-5433-01	13	01	1																
4485-6301-01	05	08	1																
4485-6301-01	13	14	1																
4611-6201-01	23	14	1																
4640-0902-01	02	07	1																
4640-0903-01	12	07	1																
4640-0903-01	15	05	1																
4642-0901-01	15	17	1																
4642-0901-01	16	14	1																
4643-1009-02	22	07	4																



Copyright
2000 MINOLTA Co., Ltd.
Printed in Japan

4470-7994-21 00122830