FN-503

PARTS MANUAL

MINOLTA

SFIX CHART

SFIX No.	COUNTRY	VOLTAGE	FREQUENCY (Hz)	PAPER SIZE	SFIX No.	COUNTRY	VOLTAGE	FREQUENCY (Hz)	PAPER SIZE
711	JAPAN	-	-	METRIC	713	EXCEPT JAPAN/USA/ CANADA/EUROPE	-	-	METRIC
712	USA/CANADA	-	-	INCH	714	EUROPE	-	-	METRIC

CONTENTS

1. HOUSING ••••••

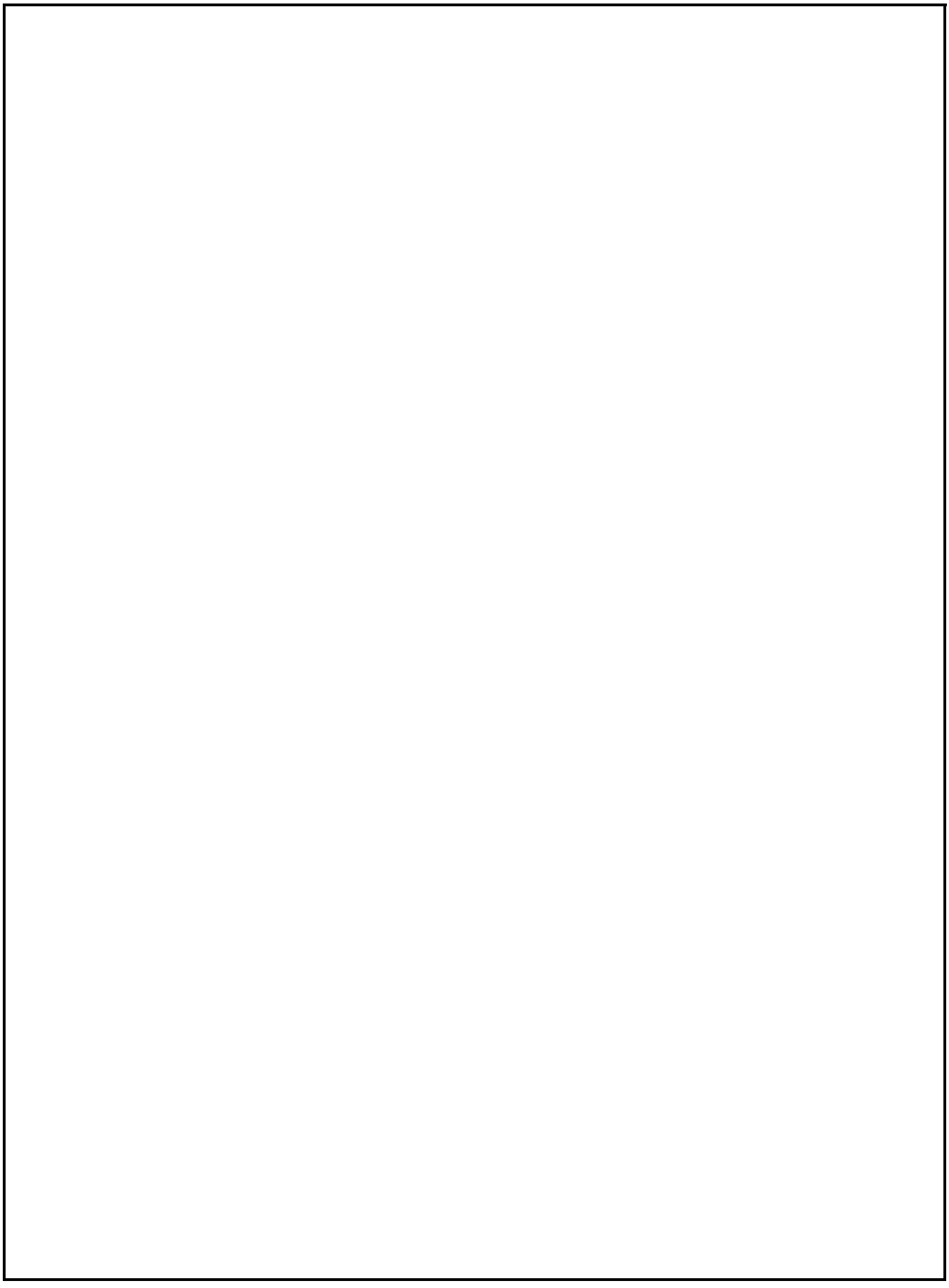

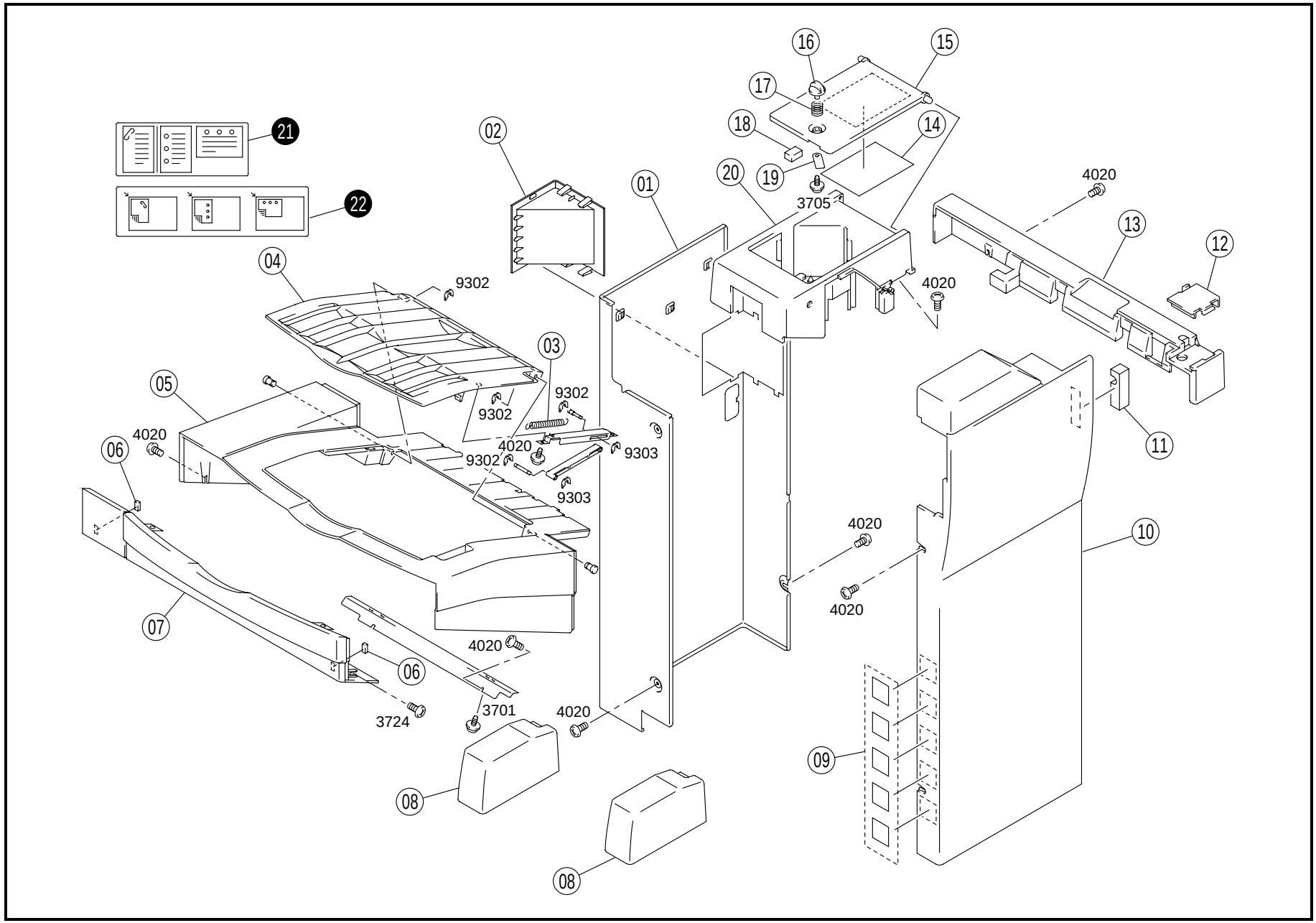
16
15
17
18
14
19
20
3705
01
02
21
22
04
9302
03
05
9302
9302
4020
06
4020
9302
9303
9303
4020
4020
4020
13
12
11
10
07
4020
06
3724
3701
4020
09
08
08

INDEX	PART NO.	PART NAME	REC	QTY
01	4612-1002-01	COVER		1
02	4612-1003-01	COVER		1
03	4470-4042-02	TENSION SPRING		1
04	4612-4323-01	TRAY		1
05	4612-4322-01	TRAY		1
06	4478-3505-01	CUSHION		2
07	4612-4324-01	COVER		1
08	4493-1404-04	COVER		2
09	4492-7301-01	LABEL		1
10	4612-1001-01	COVER		1
11	4612-2005-01	STOPPER		1
12	4611-1021-01	COVER		1
13	4611-1006-01	RIGHT COVER-UPR		1
14	4611-7303-01	LABEL		1
15	4611-1004-01	COVER		1
16	4611-5801-01	KNOB		1
17	4405-1201-01	PRESSURE SPRING		1
18	4493-3501-02	CUSHION		1
19	4611-5802-01	PLATE		1
20	4611-1003-01	REAR COVER-UPR		1

INDEX	PART NO.	PART NAME	REC	QTY	SFIX
21	4611-7305-01	LABEL POSITION		1	711, 713
21	4611-7306-01	LABEL POSITION		1	712
21	4611-7307-01	LABEL POSITION		1	714
22	4621-7308-01	LABEL		1	711, 713
22	4621-7309-01	LABEL		1	712
22	4621-7310-01	LABEL		1	714

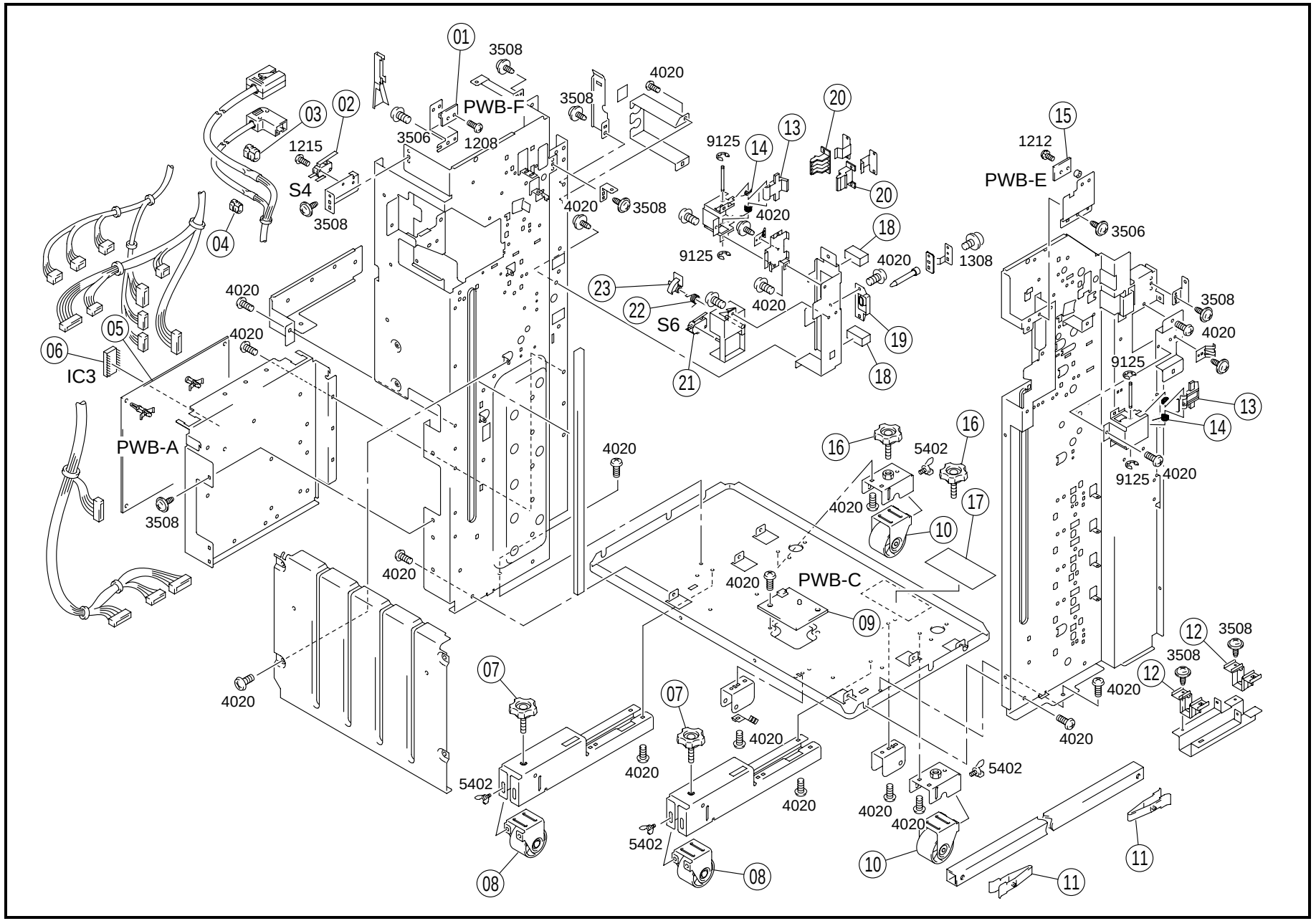
01
3508
4020
PWB-F
3508
03
02
3506
1208
1215
S4
3508
04
4020
3508
9125
14
13
20
20
4020
9125
18
4020
1308
15
1212
PWB-E
3506
23
22
S6
4020
19
18
21
4020
05
06
IC3
4020
PWB-A
3508
4020
4020
16
5402
16
17
10
4020
4020
PWB-C
09
3508
4020
9125
13
14
9125
4020
12
3508
3508
12
4020
4020
07
07
4020
4020
5402
4020
5402
4020
4020
4020
5402
08
08
10
11
11

INDEX	PART NO.	PART NAME	REC	QTY
01	4611-6054-01	PW BOARD PQ (PWB-F)		1
02	4611-6303-01	MICROSWITCH STAPLER DOOR (S4)		1
03	9384-1521-51	CORD BUSHING		1
04	9384-1621-61	CORD BUSHING		1
05	4612-6054-01	PWB ASSY CONTROL (PWB-A)	RP	1
06	4621-6603-01	IC (IC3)		1
07	4493-2108-01	ADJUSTING BOLT		2
08	4427-2612-01	CASTOR		2
09	4612-6052-01	PW BOARD-C LED (PWB-C)		1
10	4611-0204-01	CASTOR		2
11	4493-2414-02	STOPPER		2
12	4643-2116-04	GUIDE		2
13	4643-2103-01	CATCH		2
14	4643-2105-01	TORSION SPRING		2
15	4611-6053-01	PW BOARD LED (PWB-E)		1
16	4611-2016-01	ADJUSTING BOLT		2
17	4612-7303-01	LABEL		1
18	4612-2006-01	STOPPER		2
19	4643-2131-02	GUIDE		1
20	4643-2101-02	PAWL		2
21	4611-6303-01	MICROSWITCH SET SW (S6)		1
22	4643-2112-01	TORSION SPRING		1
23	4643-2119-02	ACTUATOR		1

INDEX	PART NO.	PART NAME	REC	QTY	SFIX

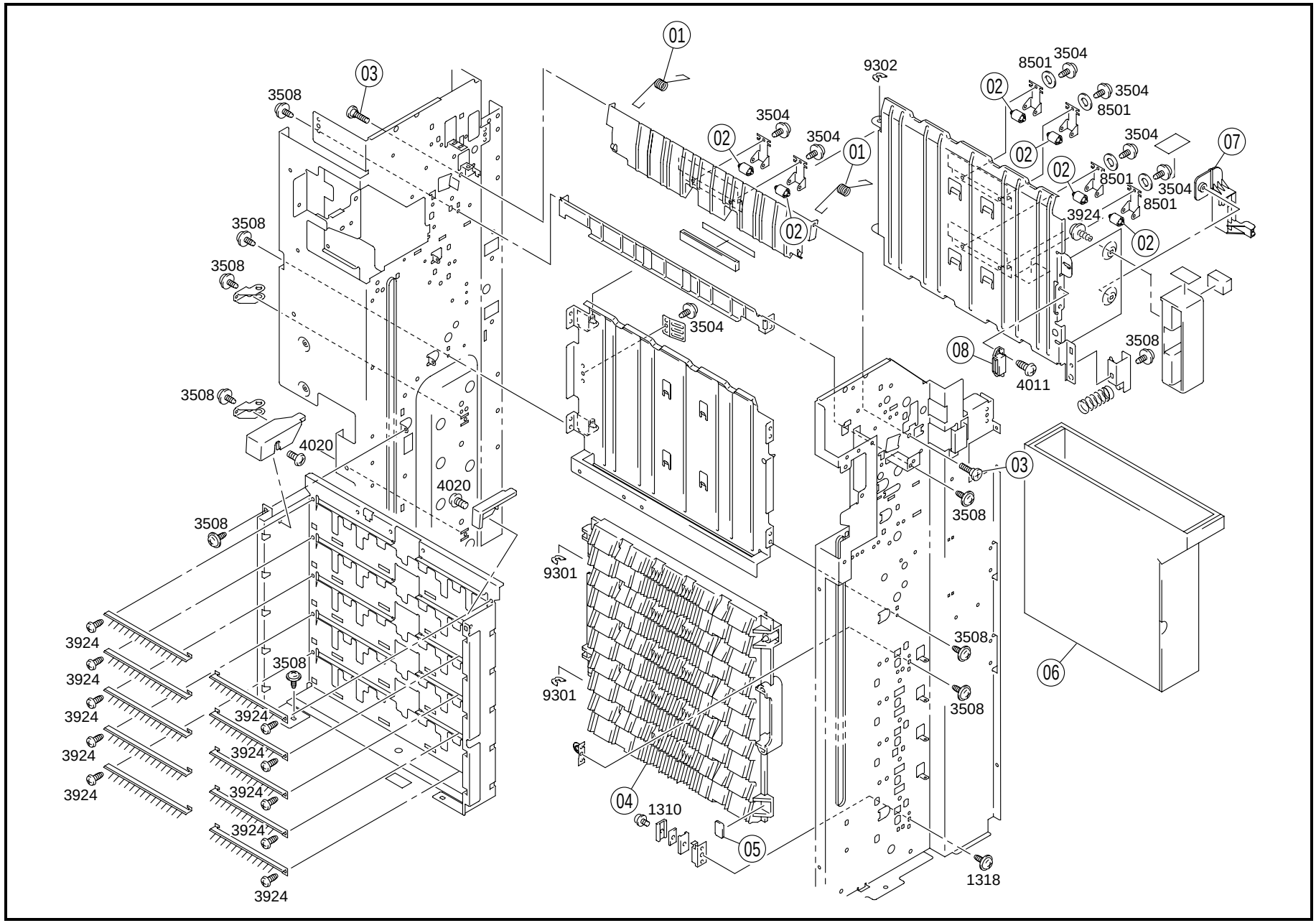
01
03
3508
9302
8501
3504
02
3504
8501
3504
02
3504
01
02
3504
07
02
8501
3504
8501
3924
02
3508
3508
3504
08
3508
4011
3508
4020
03
4020
3508
3508
9301
3924
3924
3924
3924
3924
3924
3924
3924
3508
9301
3508
3508
06
04
1310
05
1318

INDEX	PART NO.	PART NAME	REC	QTY	INDEX	PART NO.	PART NAME	REC	QTY
01	4612-3025-01	TORSION SPRING		2					
02	4417-3412-02	ROLL		6					
03	4611-3022-01	SHOULDER SCREW		2					
04	4493-3409-02	GUIDE		1					
05	1251-3306-01	PLATE		1					
06	4612-4001-01	CASSETTE		1					
07	4612-3421-02	LEVER		1					
08	1273-3535-01	MAGNET CATCH		1					

INDEX	PART NO.	PART NAME	REC	QTY	SFIX

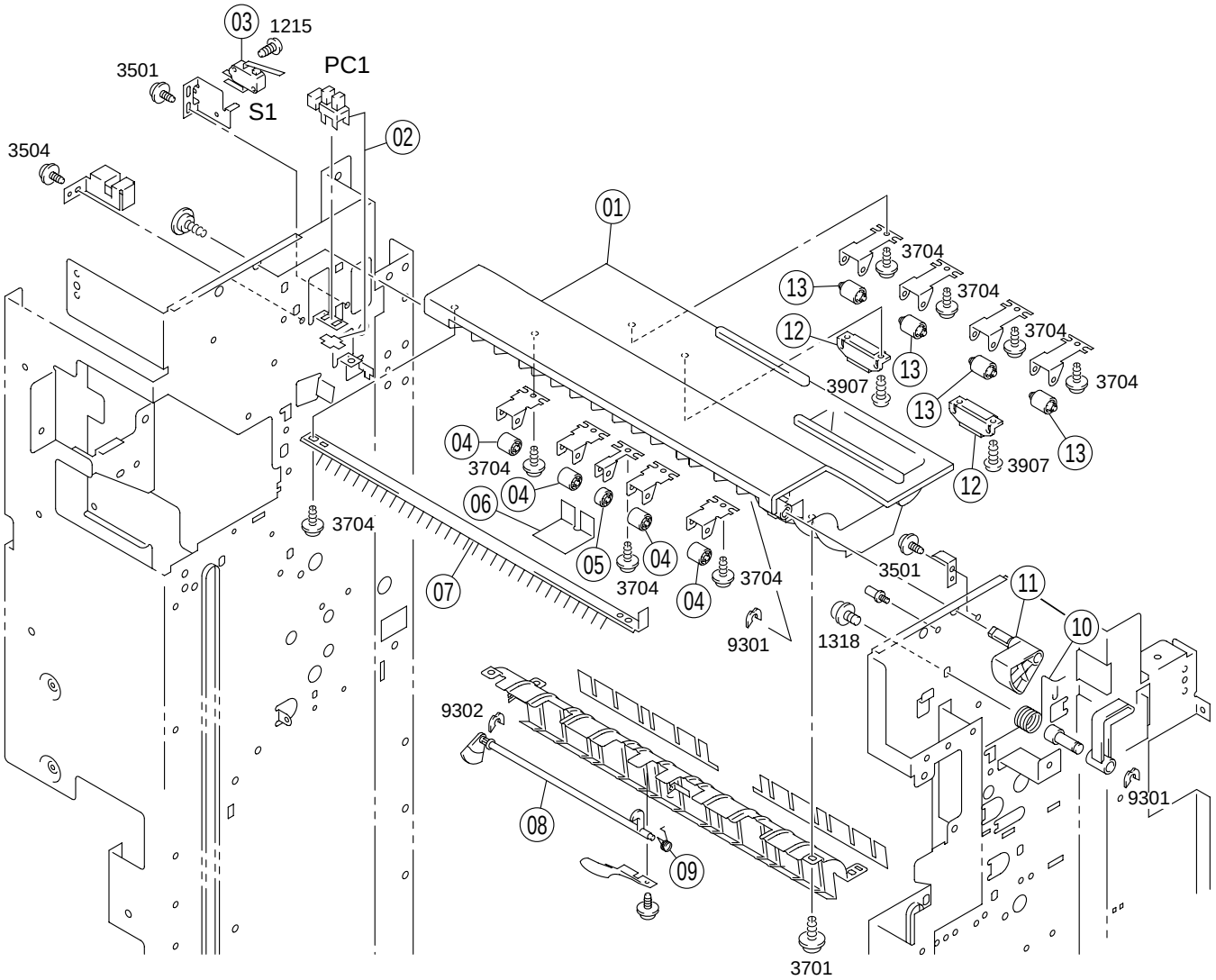
03
1215
3501
PC1
S1
02
3504
01
3704
13
3704
12
3704
13
3907
3704
13
13
04
3704
3907
12
04
06
3704
05
04
3704
04
3704
3501
11
07
10
9301
1318
9302
9301
08
09
3701

INDEX	PART NO.	PART NAME	REC	QTY	INDEX	PART NO.	PART NAME	REC	QTY
01	4611-3001-01	GUIDE		1					
02	4612-0901-01	PHOTO INTERRUPTER 1ST TRAY EXIT(PC1)		1					
03	4611-6303-01	MICROSWITCH UPPER COVER (S1)		1					
04	4611-3210-01	ROLL		4					
05	4611-3208-01	ROLL		1					
06	4611-3030-01	POLYESTER FILM		1					
07	4611-3007-01	NEUTRALIZING BRUSH		1					
08	4611-3011-01	ACTUATOR		1					
09	4611-3012-01	TORSION SPRING		1					
10	4611-3021-01	TORSION SPRING		1					
11	4611-3014-01	CAM		1					
12	4621-5519-01	MAGNET CATCH		2					
13	4417-3412-02	ROLL		4					

INDEX	PART NO.	PART NAME	REC	QTY	SFIX

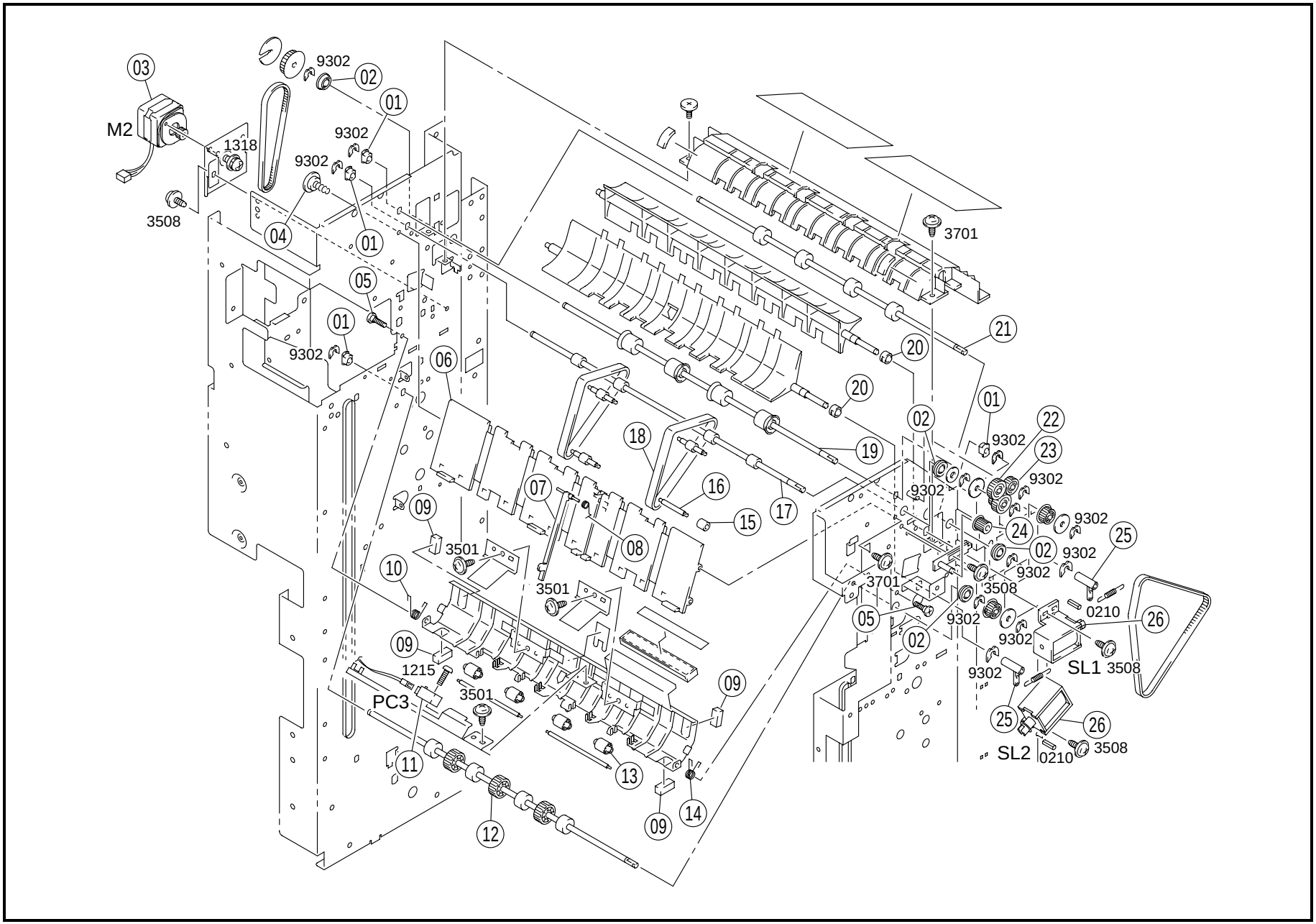
03
M2
1318
3508
9302
02
01
9302
9302
04
01
05
01
9302
06
3701
21
20
20
01
02
22
9302
23
9302
9302
9302
24
25
02
9302
9302
3701
3508
0210
26
05
9302
9302
02
9302
SL1
3508
25
26
SL2
0210
3508
18
19
16
17
15
07
08
09
3501
10
3501
09
1215
PC3
3501
09
11
13
14
09
12

INDEX	PART NO.	PART NAME	REC	QTY
01	1250-2302-01	BUSHING		4
02	4102-4058-01	BALL BEARING		4
03	4611-6112-01	MOTOR TRANSPORT (M2)		1
04	1100-1352-04	SHOULDER SCREW		2
05	4611-3022-01	SHOULDER SCREW		2
06	4611-5873-03	GUIDE		1
07	4611-3016-01	ACTUATOR		1
08	4611-3017-02	TORSION SPRING		1
09	4478-3505-01	CUSHION		4
10	4611-3009-01	TORSION SPRING		1
11	4611-6302-01	PHOTO INTERRUPTER FINISH TRAY (PC3)		1
12	4611-3202-01	ROLLER		1
13	4417-3410-01	ROLL		4
14	4611-3010-01	TORSION SPRING		1
15	4491-4423-02	ROLL		4
16	4611-5874-02	SHAFT		4
17	4611-5871-13	ROLLER		1
18	4611-5872-13	BELT		2
19	4611-3203-01	ROLLER		1
20	4493-3411-01	BUSHING		2
21	4611-3201-01	ROLLER		1
22	1300-3241-08	GEAR 28T		1
23	1300-3131-03	GEAR 24T		1
24	1075-2789-01	PULLEY 15T		1
25	4611-3107-01	ARM		2
26	4611-6201-01	SOLENOID SWITCH (SL1.2)		2

INDEX	PART NO.	PART NAME	REC	QTY	SFIX

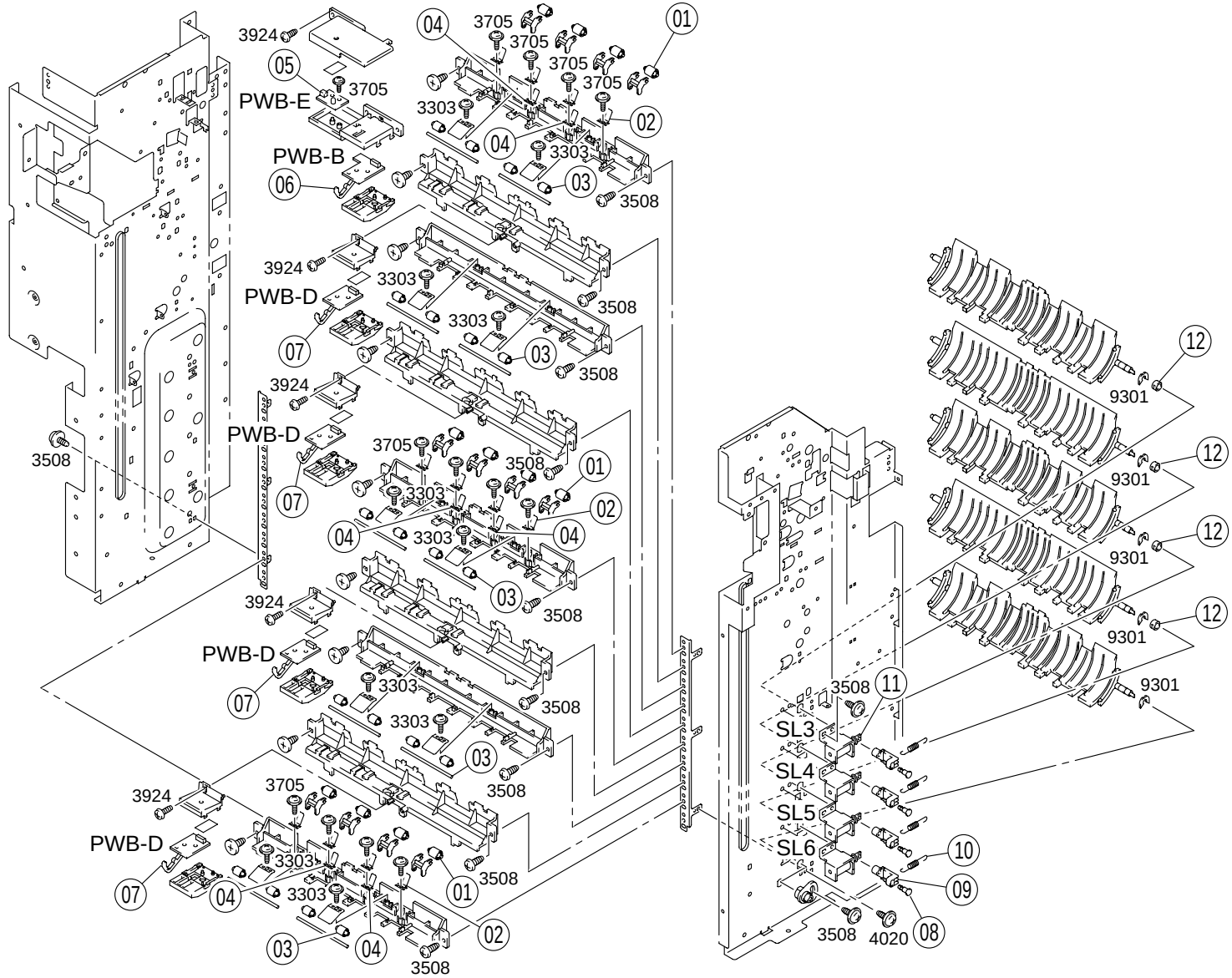
3924
05
3705
PWB-E
04
3705
3705
3705
3705
01
3303
02
04
3303
PWB-B
06
03
3508
3924
3303
PWB-D
3508
3303
07
03
3508
3924
3508
PWB-D
3705
3508
01
07
3303
02
04
3303
04
3924
03
3508
PWB-D
07
3303
3508
3303
03
3508
3924
3705
PWB-D
3303
07
04
3303
01
3508
03
04
02
3508
12
9301
12
9301
12
9301
12
9301
9301
3508
11
SL3
SL4
SL5
SL6
10
09
3508
4020
08

INDEX	PART NO.	PART NAME			REC	QTY	INDEX	PART NO.	PART NAME	REC	QTY
01	1250-4410-01	ROLL				12					
02	4493-3206-01	PLATE SPRING				12					
03	4417-3410-01	ROLL				20					
04	4439-3501-01	PLATE SPRING				6					
05	4611-6053-01	PW BOARD	LED	(PWB-E)		1					
06	4622-6051-02	PWB-B	PQ	(PWB-B)	RP	1					
07	4622-6053-02	PWB-D	BIN EMPTY	(PWB-D)	RP	4					
08	1250-4303-01	STOPPER				4					
09	4493-3413-01	HOLDER				4					
10	1250-1404-01	TENSION SPRING				4					
11	4612-6201-01	SOLENOID	BIN	(SL3-6)		4					
12	4493-3411-01	BUSHING				4					

INDEX	PART NO.	PART NAME	REC	QTY	SFIX

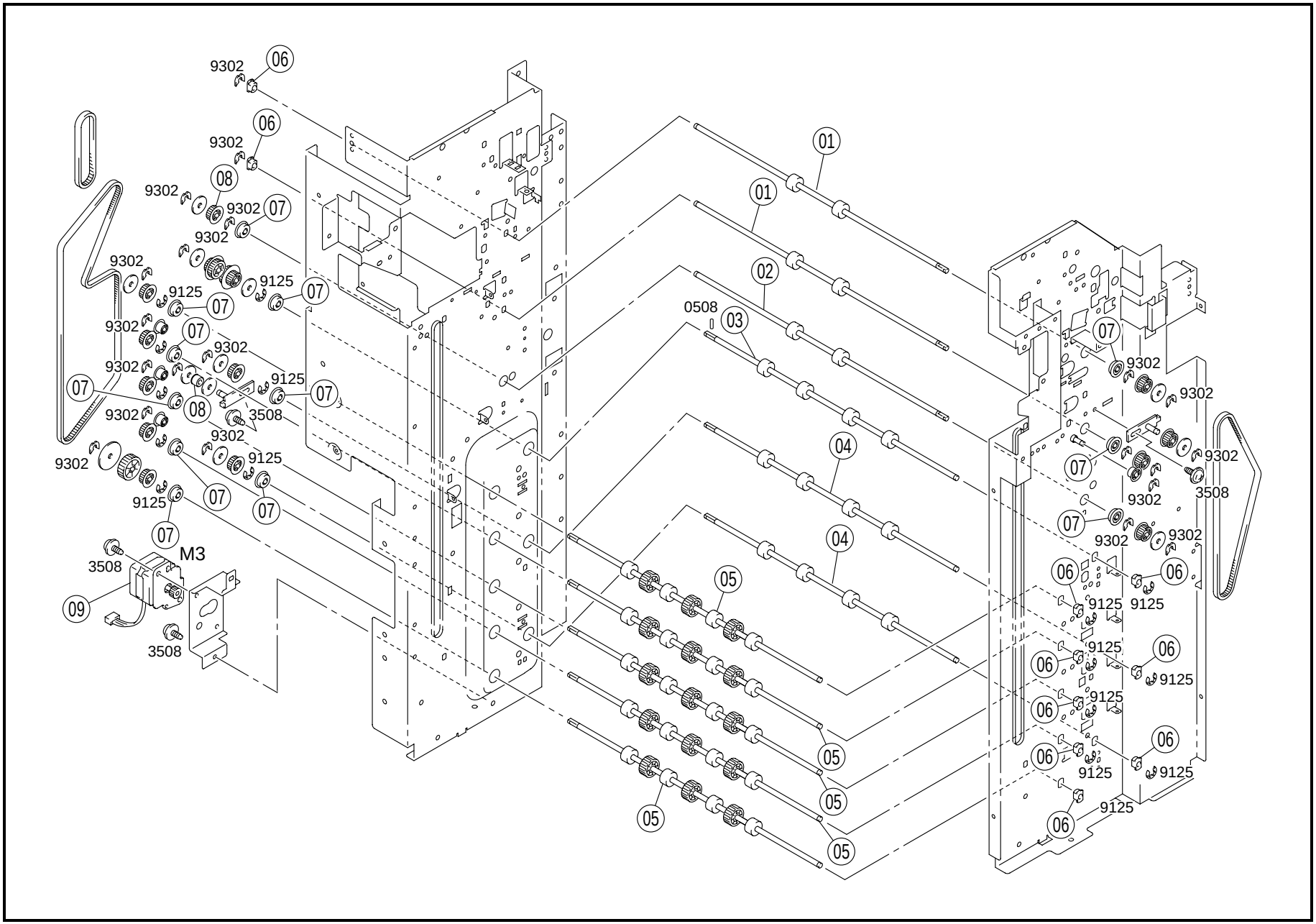
9302
06
08
07
9125
01
02
0508
03
04
05
3508
M3
09

INDEX	PART NO.	PART NAME	REC	QTY	INDEX	PART NO.	PART NAME	REC	QTY
01	4612-3404-01	ROLLER		2					
02	4612-3405-01	ROLLER		1					
03	4612-3522-01	ROLLER		1					
04	4612-3523-01	ROLLER		2					
05	4622-5514-01	ROLLER		5					
06	1250-2302-01	BUSHING		10					
07	1300-4223-01	BALL BEARING		12					
08	1144-4328-01	ROLL		1					
09	9314-1611-51	MOTOR TRANSPORT-L (M3)		1					

INDEX	PART NO.	PART NAME	REC	QTY	SFIX

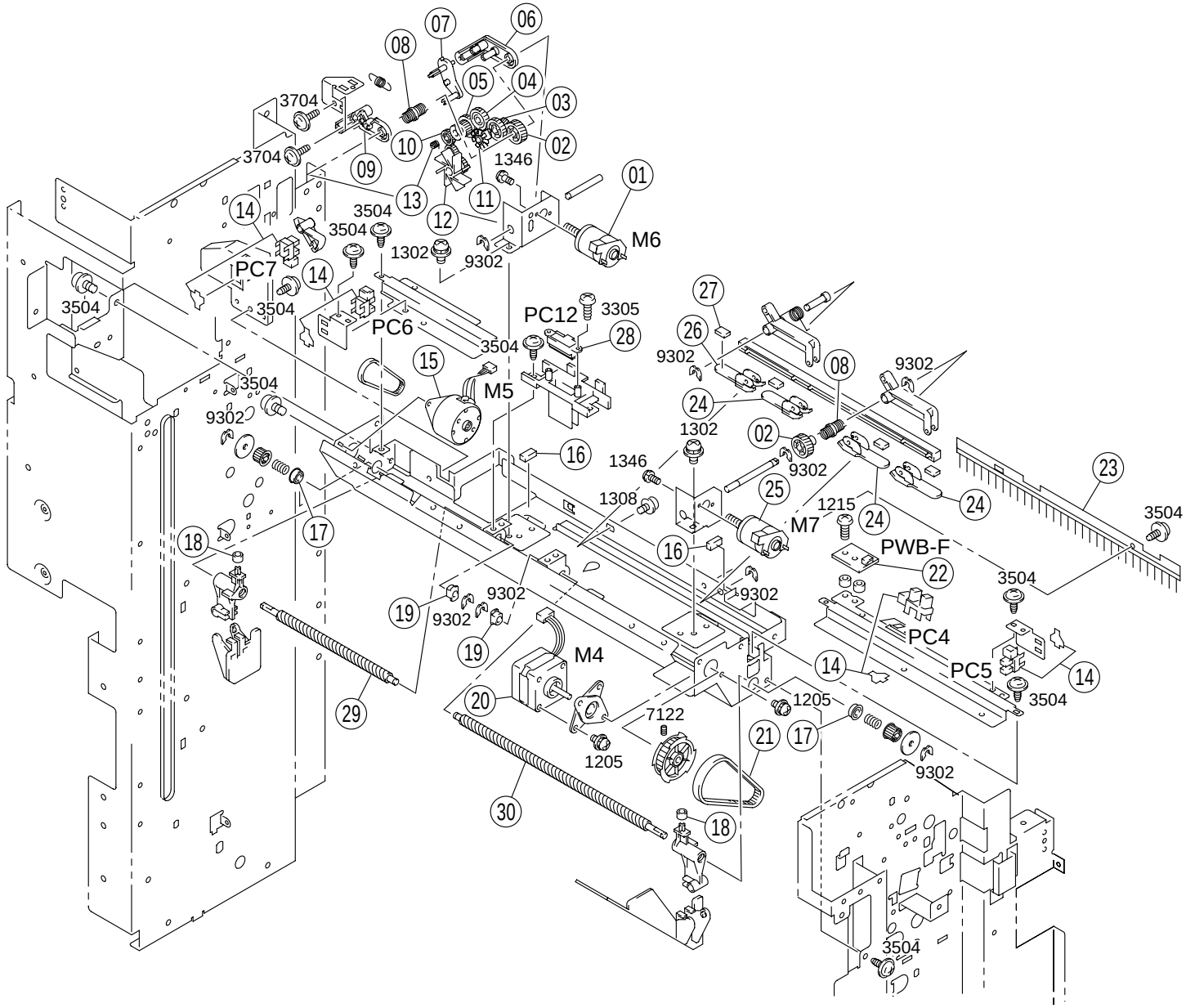
01
02
03
04
05
06
07
08
09
10
11
12
13
14
15
16
17
18
19
20
21
22
23
24
25
26
27
28
29
30
3704
3504
1346
1302
9302
3305
1308
1215
7122
1205
M6
M5
M4
M7
PC7
PC6
PC12
PC4
PC5
PWB-F

INDEX	PART NO.	PART NAME	REC	QTY
01	4611-0751-01	PWB-MOTOR PADDLE (M6)		1
02	4611-5407-01	GEAR 41T		2
03	4611-5409-01	GEAR 25/26T		1
04	1300-3131-03	GEAR 24T		1
05	4611-5403-01	GEAR 18/27T		1
06	4611-5405-01	ARM		1
07	4611-5417-01	ARM		1
08	4611-0152-01	CLUTCH SPRING	RP	2
09	4611-5408-01	ARM		1
10	4611-5416-01	GEAR 19T		3
11	4611-5414-01	ACTUATOR		1
12	4611-5401-01	PADDLE		1
13	4611-5418-01	TORSION SPRING		1
14	4612-0902-01	PHOTO INTERRUPTER (PC4-7)		4
15	4611-6105-02	MOTOR SHIFT (M5)		1
16	4478-3505-01	CUSHION		2
17	1300-4322-05	BALL BEARING		2
18	4478-5447-01	ROLL		2
19	1250-2302-01	BUSHING		2
20	4611-6104-01	MOTOR ALIGINING (M4)		1
21	4611-5303-01	TIMING BELT		1
22	4611-6054-01	PW BOARD PQ (PWB-F)		1
23	4611-5213-01	NEUTRALIZING BRUSH		1
24	4611-5508-01	LEVER		3
25	4611-0753-01	PWB-MOTOR CURL CONTRO (M7)		1
26	4611-5510-01	LEVER		1
27	4611-5509-01	CUSHION		4
28	4611-6306-01	PHOTO SWITCH TOP POSITTI (PC12)		1
29	4611-5203-01	SPIRAL ROLLER		1
30	4611-5202-01	SPIRAL ROLLER		1

INDEX	PART NO.	PART NAME	REC	QTY	SFIX

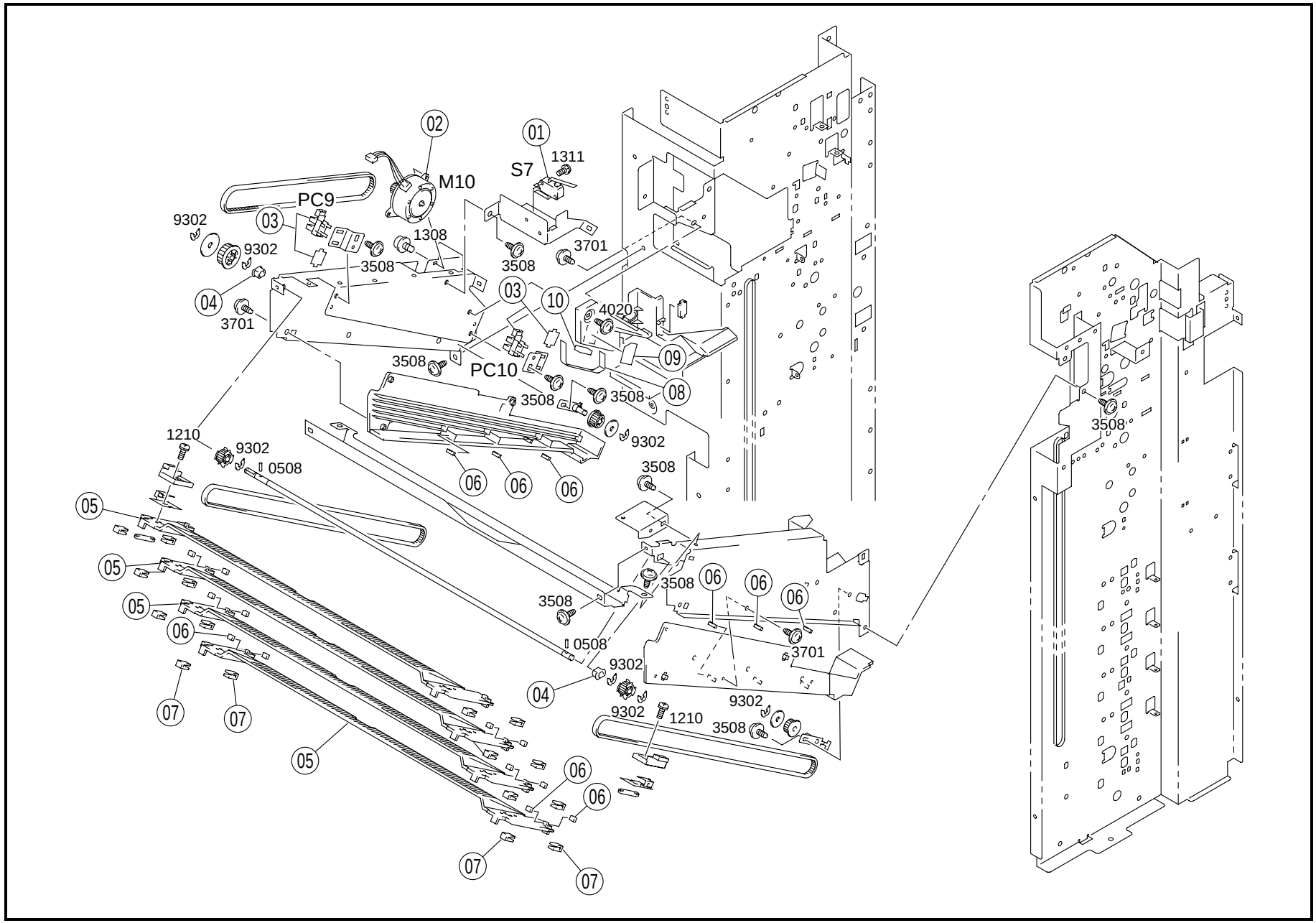
02
01
1311
S7
M10
PC9
9302
03
1308
3701
9302
3508
3508
04
3701
03
10
4020
09
3508
PC10
3508
3508
08
9302
1210
9302
0508
06
06
06
3508
05
05
05
06
3508
06
06
06
3508
0508
3701
9302
04
9302
9302
1210
3508
07
07
05
06
06
07
07
3508

INDEX	PART NO.	PART NAME	REC	QTY	INDEX	PART NO.	PART NAME	REC	QTY
01	4611-6303-01	MICROSWITCH 1ST TRAY DOO (S7)		1					
02	4611-6110-02	MOTOR ASSISTANCE (M10)		1					
03	4612-0902-01	PHOTO INTERRUPTER (PC9.10)		2					
04	1250-2302-01	BUSHING		2					
05	4611-4761-01	SUB TRAY		4					
06	4611-4763-01	CUSHION		18					
07	4611-4762-01	SLIDER		16					
08	4611-5589-01	GUIDE		1					
09	4611-5587-01	GUIDE		1					
10	4611-5588-01	CUSHION		1					

INDEX	PART NO.	PART NAME	REC	QTY	SFIX

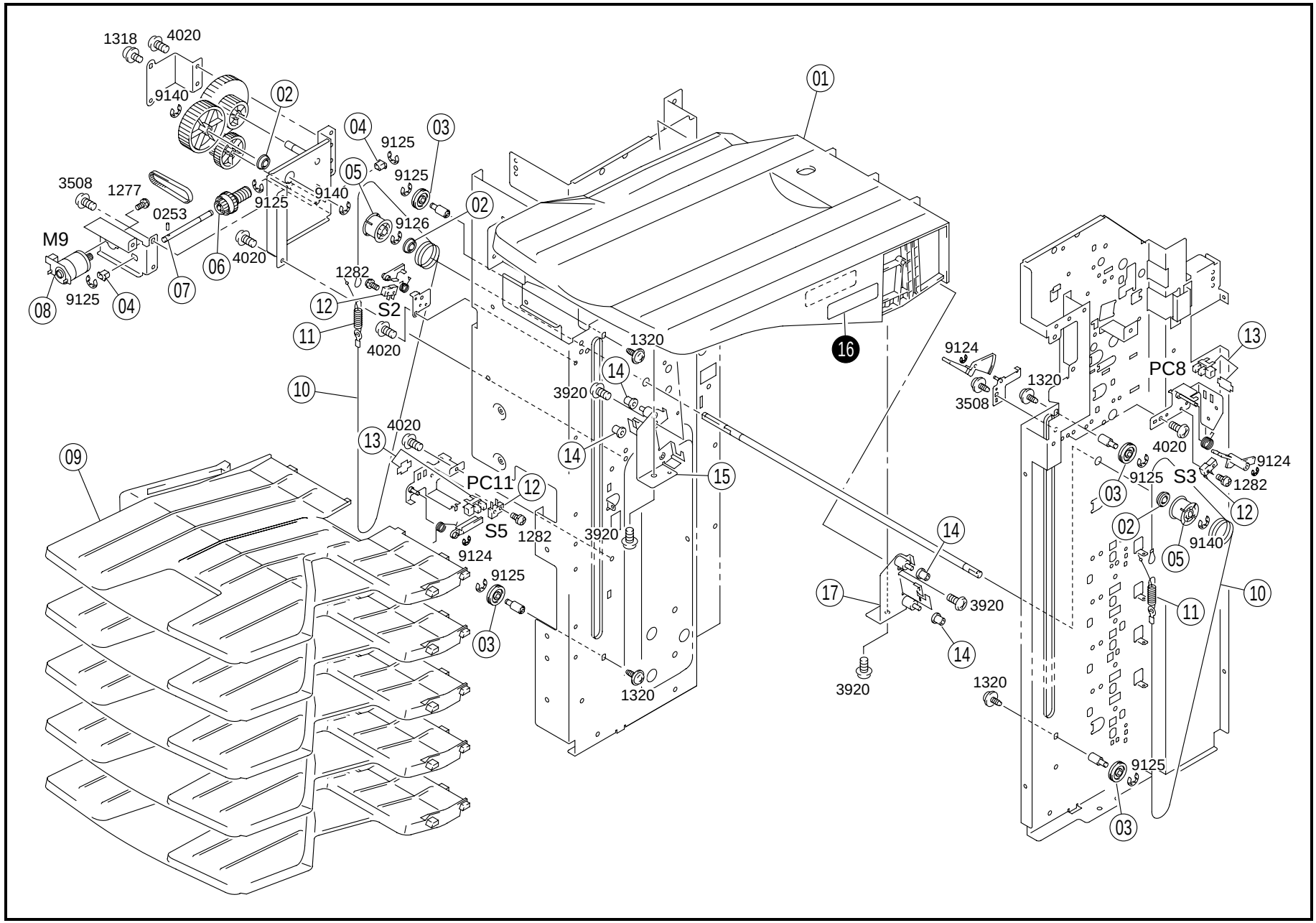
1318
4020
9140
02
04
9125
03
05
9125
3508
1277
0253
9125
9140
02
9126
M9
06
4020
1282
08
9125
04
07
12
S2
11
4020
1320
16
9124
13
PC8
1320
3508
10
3920
14
4020
13
14
15
09
PC11
12
S5
1282
3920
9124
9125
03
4020
9124
9125
S3
1282
03
12
02
9140
05
14
17
3920
11
10
14
3920
1320
1320
9125
03

INDEX	PART NO.	PART NAME	REC	QTY	INDEX	PART NO.	PART NAME	REC	QTY
01	4612-4325-01	TRAY		1					
02	4102-3149-01	BALL BEARING		3					
03	1500-2521-21	PULLEY		4					
04	1250-2302-01	BUSHING		2					
05	4470-4106-01	PULLEY		2					
06	4611-4609-01	PULLEY 29T		1					
07	4611-4605-01	SHAFT		1					
08	4611-0752-01	PWB-MOTOR ELEVATER (M9)		1					
09	4612-4326-01	TRAY		5					
10	4611-4505-01	WIRE		2					
11	4470-4108-01	TENSION SPRING		2					
12	4611-6305-01	MICROSWITCH (S2.3.5)		3					
13	4612-0902-01	PHOTO INTERRUPTER (PC8.11)		2					
14	4611-4308-01	BUSH		4					
15	4611-0210-01	BRACKET		1					
17	4611-0213-02	BRACKET		1					

INDEX	PART NO.	PART NAME	REC	QTY	SFIX
16	4643-7311-01	LABEL		1	711
16	4643-7318-01	LABEL		1	712, 713, 714

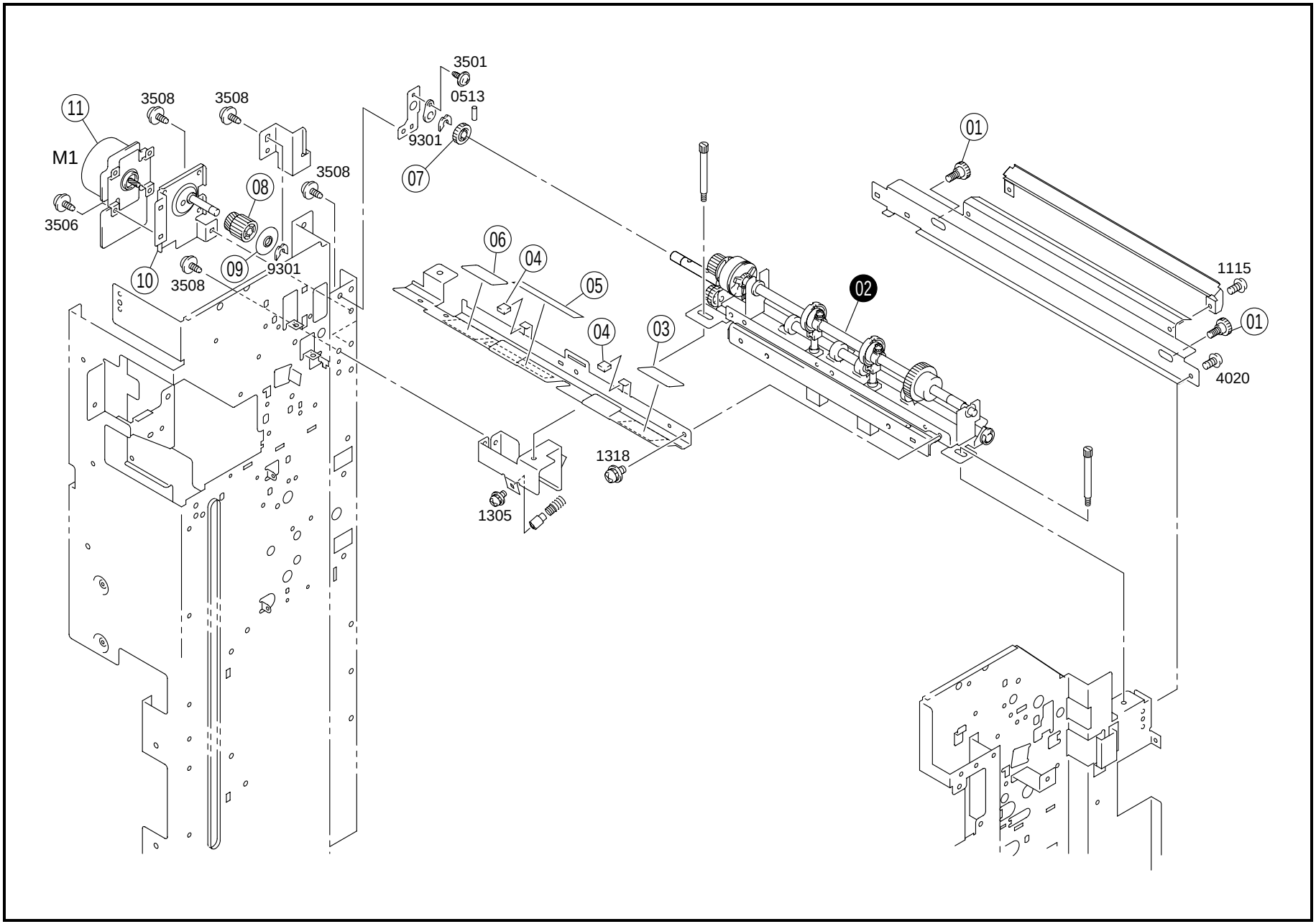
3501
0513
11
3508
3508
M1
9301
07
3508
08
3506
01
06
04
09
9301
10
3508
05
02
1115
04
03
01
4020
1318
1305

INDEX	PART NO.	PART NAME	REC	QTY	INDEX	PART NO.	PART NAME	REC	QTY
01	4611-4026-01	SHOULDER SCREW		2					
03	4611-7304-01	LABEL JAM REMOVAL		1					
04	4611-4024-01	KNOB		2					
05	4611-7314-01	LABEL CAUTION		1					
06	4611-7302-01	LABEL JAM REMOVAL		1					
07	4611-4102-01	GEAR 20T		1					
08	4611-4203-01	GEAR 22/38T		1					
09	4612-4205-01	FLANGE		1					
10	4612-0211-01	BRACKET ASSY		1					
11	4612-6101-01	MOTOR TRANSPORT (M1)		1					

INDEX	PART NO.	PART NAME	REC	QTY	SFIX
02	4611-4016-01	PUNCH UNIT		1	711, 713
02	4612-4002-01	PUNCH UNIT		1	712
02	4612-4003-01	PUNCH UNIT		1	714

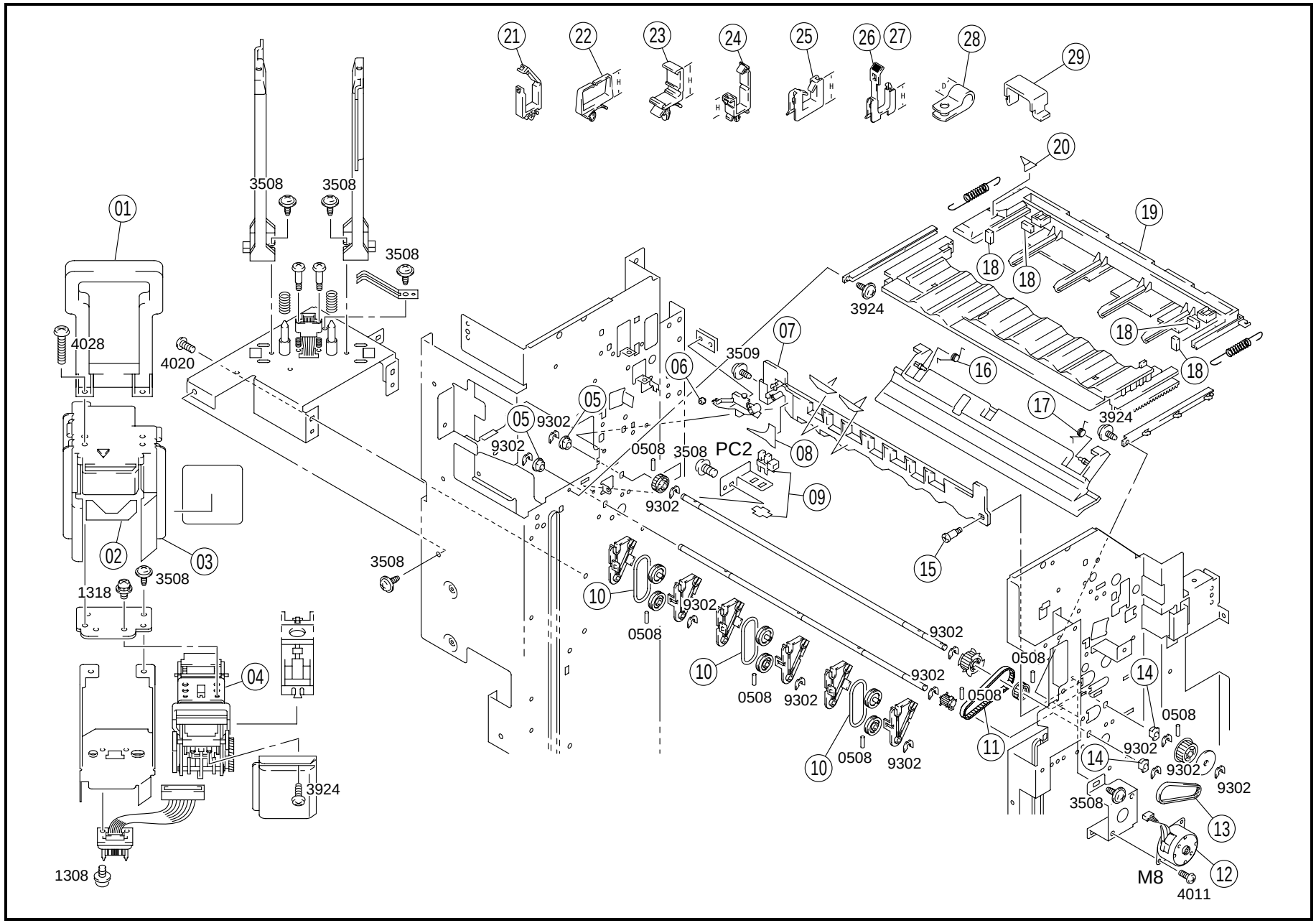
01
02
03
04
05
06
07
08
09
10
11
12
13
14
15
16
17
18
19
20
21
22
23
24
25
26
27
28
29
3508
4028
4020
1318
1308
3924
3509
PC2
9302
0508
M8
4011

INDEX	PART NO.	PART NAME	REC	QTY
01	4611-5604-01	HANDLE		1
02	4611-5607-01	POLYESTER FILM		1
03	4611-5605-01	COVER		1
04	4611-5601-01	STAPLER UNIT		1
05	1200-3221-04	BUSHING		2
06	1144-4701-02	ROLL		1
07	4611-5009-01	TRAY		1
08	4611-5016-01	POLYESTER FILM		1
09	4612-0902-01	PHOTO INTERRUPTER FINISH POS (PC2)		1
10	4611-5113-01	BELT		3
11	4611-5112-01	TIMING BELT		1
12	4611-6107-02	MOTOR FINISH TRAY (M8)		1
13	4611-5104-01	TIMING BELT		1
14	1250-2302-01	BUSHING		2
15	4426-3137-01	SHOULDER SCREW		1
16	4611-5005-01	TORSION SPRING		1
17	4611-5004-01	TORSION SPRING		1
18	4478-3505-01	CUSHION		4
19	4611-5003-01	GUIDE		1
20	4611-5024-01	PLATE		1
21	9384-1310-11	WIRING SADDLE 5.2H		16
22	9384-1310-81	WIRING SADDLE 6.4H		2
23	9384-1311-21	WIRING SADDLE 16.8H		4
24	9384-1921-01	WIRING SADDLE 14.4H		26
25	9384-2010-21	EDGE COVER 8.5H		10
26	9384-2010-31	EDGE COVER 15.4H		4
27	9384-2010-41	EDGE COVER 25.0H		3
28	9384-1310-91	WIRING SADDLE 18.5H		27
29	1065-5872-01	CORD CLAMP		8

INDEX	PART NO.	PART NAME	REC	QTY	SFIX

INDEX	PART NO.	PART NAME	ILLUST
0210 0253	9754-3012-08 9754-0212-50	SPRING ROLL PIN	
0508 0513	9752-2010-50 9752-2014-50	PIN	
1115	9642-0308-13	SCREW	
1205 1208 1210 1212 1215 1277 1282	9644-0304-13 9644-0306-13 9644-0308-13 9644-0310-13 9644-0314-13 9644-2606-13 9644-2310-13	SCREW	
1302 1305 1308 1310 1311 1318 1320 1346	9646-0305-13 9646-0306-13 9646-0308-13 9646-0312-13 9646-0314-13 9646-0408-13 9646-0410-13 9646-2606-13	SCREW	
3305	9732-0308-13	TAPPING SCREW	
3501 3504 3506 3508 3509	9735-0306-13 9735-0308-13 9735-0406-13 9735-0408-13 9735-0410-13	TAPPING SCREW	
3701 3704 3705 3724	9739-0408-13 9739-0308-13 9739-0306-13 9739-0412-14	TAPPING SCREW	

INDEX	PART NO.	PART NAME	ILLUST
3907 3920	9742-0308-13 9742-0408-14	TAPPING SCREW	
4020 4021 4028	9743-0408-14 9743-0308-14 9743-0418-14	TAPPING SCREW	
5402	9678-0408-13	BOLT	
7122	9684-0304-07	SET SCREW	
8501	9716-0300-01	WASHER	
9124 9125 9126 9140	9721-0300-13 9721-0400-13 9721-0600-13 9721-0500-13	RETAINING RING	
9301 9302 9303	1066-1151-01 4425-3001-01 4425-3002-01	RETAINING RING	

INDEX	PART NO.	PART NAME	ILLUST

PART NO.	FIG.	INDEX	QTY
1065-5872-01	12	29	8
1075-2789-01	05	24	1
1100-1352-04	05	04	2
1144-4328-01	07	08	1
1144-4701-02	12	06	1
1200-3221-04	12	05	2
1250-1404-01	06	10	4
1250-2302-01	05	01	4
1250-2302-01	07	06	10
1250-2302-01	08	19	2
1250-2302-01	09	04	2
1250-2302-01	10	04	2
1250-2302-01	12	14	2
1250-4303-01	06	08	4
1250-4410-01	06	01	12
1251-3306-01	03	05	1
1273-3535-01	03	08	1
1300-3131-03	05	23	1
1300-3131-03	08	04	1
1300-3241-08	05	22	1
1300-4223-01	07	07	12
1300-4322-05	08	17	2
1500-2521-21	10	03	4
4102-3149-01	10	02	3
4102-4058-01	05	02	4
4405-1201-01	01	17	1
4417-3410-01	05	13	4
4417-3410-01	06	03	20
4417-3412-02	03	02	6
4417-3412-02	04	13	4
4426-3137-01	12	15	1
4427-2612-01	02	08	2
4439-3501-01	06	04	6
4470-4042-02	01	03	1
4470-4106-01	10	05	2
4470-4108-01	10	11	2
4478-3505-01	01	06	2
4478-3505-01	05	09	4
4478-3505-01	08	16	2
4478-3505-01	12	18	4
4478-5447-01	08	18	2
4491-4423-02	05	15	4
4492-7301-01	01	09	1
4493-1404-04	01	08	2
4493-2108-01	02	07	2
4493-2414-02	02	11	2
4493-3206-01	06	02	12
4493-3409-02	03	04	1
4493-3411-01	05	20	2
4493-3411-01	06	12	4
4493-3413-01	06	09	4
4493-3501-02	01	18	1
4611-0152-01	08	08	2
4611-0204-01	02	10	2
4611-0210-01	10	15	1
4611-0213-02	10	17	1
4611-0751-01	08	01	1
4611-0752-01	10	08	1
4611-0753-01	08	25	1
4611-1003-01	01	20	1
4611-1004-01	01	15	1
4611-1006-01	01	13	1
4611-1021-01	01	12	1
4611-2016-01	02	16	2
4611-3001-01	04	01	1
4611-3007-01	04	07	1
4611-3009-01	05	10	1
4611-3010-01	05	14	1
4611-3011-01	04	08	1
4611-3012-01	04	09	1
4611-3014-01	04	11	1
4611-3016-01	05	07	1
4611-3017-02	05	08	1
4611-3021-01	04	10	1
4611-3022-01	03	03	2
4611-3022-01	05	05	2
4611-3030-01	04	06	1
4611-3107-01	05	25	2
4611-3201-01	05	21	1
4611-3202-01	05	12	1
4611-3203-01	05	19	1
4611-3208-01	04	05	1
4611-3210-01	04	04	4
4611-4016-01	11	02	1
4611-4024-01	11	04	2
4611-4026-01	11	01	2
4611-4102-01	11	07	1
4611-4203-01	11	08	1
4611-4308-01	10	14	4
4611-4505-01	10	10	2
4611-4605-01	10	07	1
4611-4609-01	10	06	1
4611-4761-01	09	05	4
4611-4762-01	09	07	16
4611-4763-01	09	06	18
4611-5003-01	12	19	1
4611-5004-01	12	17	1
4611-5005-01	12	16	1
4611-5009-01	12	07	1
4611-5016-01	12	08	1
4611-5024-01	12	20	1
4611-5104-01	12	13	1
4611-5112-01	12	11	1
4611-5113-01	12	10	3
4611-5202-01	08	30	1
4611-5203-01	08	29	1
4611-5213-01	08	23	1
4611-5303-01	08	21	1
4611-5401-01	08	12	1
4611-5403-01	08	05	1
4611-5405-01	08	06	1
4611-5407-01	08	02	2
4611-5408-01	08	09	1
4611-5409-01	08	03	1
4611-5414-01	08	11	1
4611-5416-01	08	10	3
4611-5417-01	08	07	1
4611-5418-01	08	13	1
4611-5508-01	08	24	3
4611-5509-01	08	27	4
4611-5510-01	08	26	1
4611-5587-01	09	09	1
4611-5588-01	09	10	1
4611-5589-01	09	08	1
4611-5601-01	12	04	1
4611-5604-01	12	01	1
4611-5605-01	12	03	1
4611-5607-01	12	02	1
4611-5801-01	01	16	1
4611-5802-01	01	19	1
4611-5871-13	05	17	1
4611-5872-13	05	18	2
4611-5873-03	05	06	1
4611-5874-02	05	16	4
4611-6053-01	02	15	1
4611-6053-01	06	05	1
4611-6054-01	02	01	1
4611-6054-01	08	22	1
4611-6104-01	08	20	1
4611-6105-02	08	15	1
4611-6107-02	12	12	1
4611-6110-02	09	02	1
4611-6112-01	05	03	1
4611-6201-01	05	26	2
4611-6302-01	05	11	1
4611-6303-01	02	02	1
4611-6303-01	02	21	1
4611-6303-01	04	03	1
4611-6303-01	09	01	1
4611-6305-01	10	12	3
4611-6306-01	08	28	1
4611-7302-01	11	06	1
4611-7303-01	01	14	1
4611-7304-01	11	03	1
4611-7305-01	01	21	1
4611-7306-01	01	21	1
4611-7307-01	01	21	1
4611-7314-01	11	05	1
4612-0211-01	11	10	1
4612-0901-01	04	02	1
4612-0902-01	08	14	4
4612-0902-01	09	03	2
4612-0902-01	10	13	2
4612-0902-01	12	09	1
4612-1001-01	01	10	1
4612-1002-01	01	01	1
4612-1003-01	01	02	1
4612-2005-01	01	11	1
4612-2006-01	02	18	2
4612-3025-01	03	01	2
4612-3404-01	07	01	2
4612-3405-01	07	02	1
4612-3421-02	03	07	1
4612-3522-01	07	03	1
4612-3523-01	07	04	2
4612-4001-01	03	06	1
4612-4002-01	11	02	1
4612-4003-01	11	02	1
4612-4205-01	11	09	1
4612-4322-01	01	05	1
4612-4323-01	01	04	1
4612-4324-01	01	07	1
4612-4325-01	10	01	1
4612-4326-01	10	09	5
4612-6052-01	02	09	1
4612-6054-01	02	05	1
4612-6101-01	11	11	1
4612-6201-01	06	11	4
4612-7303-01	02	17	1
4621-5519-01	04	12	2
4621-6603-01	02	06	1
4621-7308-01	01	22	1
4621-7309-01	01	22	1
4621-7310-01	01	22	1
4622-5514-01	07	05	5
4622-6051-02	06	06	1
4622-6053-02	06	07	4
4643-2101-02	02	20	2
4643-2103-01	02	13	2
4643-2105-01	02	14	2
4643-2112-01	02	22	1
4643-2116-04	02	12	2
4643-2119-02	02	23	1
4643-2131-02	02	19	1
4643-7311-01	10	16	1
4643-7318-01	10	16	1
9314-1611-51	07	09	1
9384-1310-11	12	21	16
9384-1310-81	12	22	2
9384-1310-91	12	28	27
9384-1311-21	12	23	4
9384-1521-51	02	03	1
9384-1621-61	02	04	1
9384-1921-01	12	24	26
9384-2010-21	12	25	10
9384-2010-31	12	26	4
9384-2010-41	12	27	3



Copyright
2000 MINOLTA Co., Ltd.
Printed in Japan

4612-7994-21 00112830