# PF-115/208/7D

# PARTS MANUAL

MINOLTA

# SFIX CHART

| SFIX No. | COUNTRY | VOLTAGE | PRODUCT-NAME | PAPER SIZE | SFIX No. | COUNTRY | VOLTAGE | PRODUCT-NAME | PAPER SIZE |
|---|---|---|---|---|---|---|---|---|---|
| 120 | EUROPE<br>KOREA<br>S ARABIA<br>CURACAO<br>BRAZIL<br>L AMERICA<br>TAIWAN<br>HONG KONG<br>AUSTRALIA<br>S AFRICA | - | PF-7D | METRIC | 230 | USA/CANADA<br>PHILIPPINE | - | PF-208 | INCH |
| 130 | USA/CANADA<br>PHILIPPINE | - | PF-7D | INCH | 410 | JAPAN | - | PF-115 | METRIC |
| 210 | JAPAN | - | PF-208 | METRIC | 420 | EUROPE<br>KOREA<br>S ARABIA<br>CURACAO<br>BRAZIL<br>L AMERICA<br>TAIWAN<br>HONG KONG<br>AUSTRALIA<br>S AFRICA | - | PF-115 | METRIC |
| 220 | EUROPE<br>KOREA<br>S ARABIA<br>CURACAO<br>BRAZIL<br>L AMERICA<br>TAIWAN<br>HONG KONG<br>AUSTRALIA<br>S AFRICA | - | PF-208 | METRIC | 430 | USA/CANADA<br>PHILIPPINE | - | PF-115 | INCH |

## CONTENTS


1. CABINET HOUSING ..... 1
2. PAPER TRANSPORT SECTION ..... 3
3. DUPLEX UNIT ..... 5
4. DRIVE SECTION (A) ..... PF-208 ..... 7
5. DRIVE SECTION (B) ..... PF-208 ..... 9
6. PAPER TRAY UNIT ..... PF-208 ..... 11
7. DRIVE SECTION (A) ..... PF-115/7D ..... 13
8. DRIVE SECTION (B) ..... PF-115/7D ..... 15
9. PAPER TRAY UNIT (A) ..... PF-115 ..... 17
10. PAPER TRAY UNIT (B) ..... PF-115 ..... 19
11. RECEIPT TRAY ..... PF-7D ..... 21
12. WIRING ACCESSORIES AND JIGS ..... 23
13. SCREWS AND WASHERS ..... 25
14. NUMERICAL INDEX ..... 26


AUGUST 2000

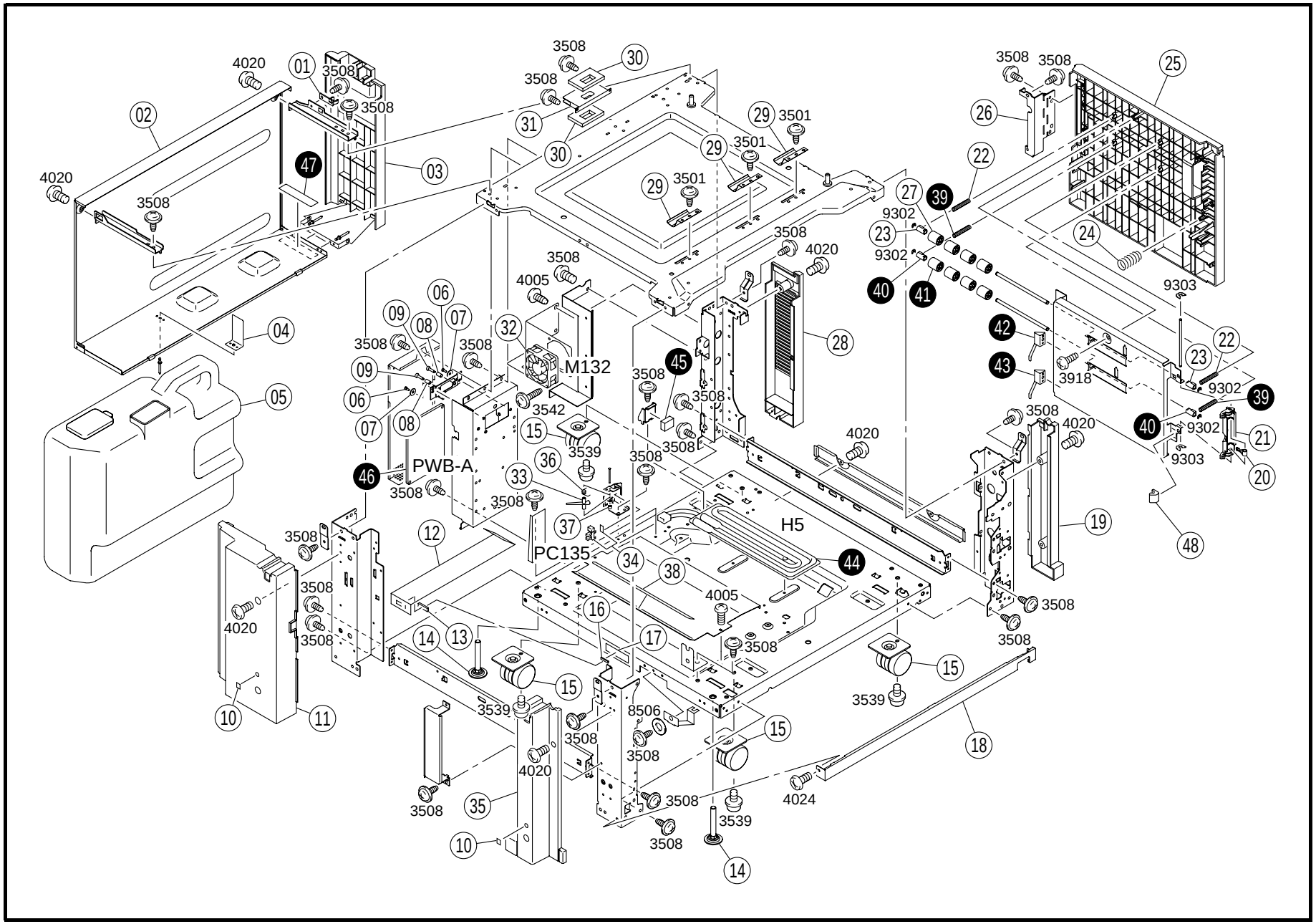
01
02
03
04
05
06
07
08
09
10
11
12
13
14
15
16
17
18
19
20
21
22
23
24
25
26
27
28
29
30
31
32
33
34
35
36
37
38
39
40
41
42
43
44
45
46
47
48
M132
PWB-A
PC135
H5
3508
4020
3501
9302
9303
3542
3539
3918
4005
4024
8506

| INDEX | PART NO. | PART NAME | REC | QTY |
|---|---|---|---|---|
| 01 | 4002-3123-01 | HOLDER | | 1 |
| 02 | 4640-1005-03 | REAR COVER | | 1 |
| 03 | 4640-2031-01 | DOOR | | 1 |
| 04 | 4640-1113-02 | REGULATING PLATE | | 1 |
| 05 | 4640-0151-02 | BOTTLE ASSY | RP | 1 |
| 06 | 1100-1321-08 | SHOULDER SCREW | | 2 |
| 07 | 1200-1536-01 | WASHER | | 2 |
| 08 | 1400-1134-02 | PRESSURE SPRING | | 2 |
| 09 | 1100-1335-03 | SHOULDER SCREW | | 2 |
| 10 | 4425-1059-12 | SEAL | | 2 |
| 11 | 4640-1107-01 | COVER | | 1 |
| 12 | 4640-3833-01 | GUIDE | | 1 |
| 13 | 4640-3835-01 | MAGNET | | 1 |
| 14 | 4444-2014-01 | ADJUSTING FOOT | | 2 |
| 15 | 4444-2010-01 | CASTOR | | 4 |
| 16 | 4640-3834-01 | MAGNET | | 1 |
| 17 | 4640-7308-01 | LABEL | | 1 |
| 18 | 4640-1111-01 | COVER | | 1 |
| 19 | 4640-1103-01 | COVER | | 1 |
| 20 | 4425-3247-01 | TORSION SPRING | | 1 |

| INDEX | PART NO. | PART NAME | REC | QTY |
|---|---|---|---|---|
| 21 | 4640-3312-01 | LEVER | | 1 |
| 22 | 4640-3315-01 | PRESSURE SPRING | | 2 |
| 23 | 4002-3331-01 | BUSHING | | 2 |
| 24 | 1149-3454-01 | PRESSURE SPRING | | 1 |
| 25 | 4640-3307-03 | DOOR | | 1 |
| 26 | 4444-3116-02 | HINGE | | 1 |
| 27 | 4425-3103-12 | ROLL | | 4 |
| 28 | 4640-1108-02 | COVER | | 1 |
| 29 | 4640-3925-01 | PLATE SPRING | | 3 |
| 30 | 4640-2026-01 | SEAL | | 2 |
| 31 | 4640-2024-01 | PIPE | | 1 |
| 32 | 9313-1000-21 | FAN MOTOR COOLING (M132) | | 1 |
| 33 | 1136-4510-01 | ACTUATOR | | 1 |
| 34 | 4640-0902-01 | PHOTO INTERRUPTER TONER BOX (PC135) | | 1 |
| 35 | 4640-1106-03 | COVER | | 1 |
| 36 | 4640-2021-01 | TORSION SPRING | | 1 |
| 37 | 1200-2105-06 | RETAINING RING | | 1 |
| 38 | 4640-3836-01 | GUIDE | | 1 |
| 48 | 4640-6201-01 | MAGNETIC MEMBER | | 1 |

| INDEX | PART NO. | PART NAME | REC | QTY | SFIX |
|---|---|---|---|---|---|
| 39 | 4640-3315-01 | PRESSURE SPRING PF-115/208 | | 2 | 210, 220, 230, 410, 420, 430 |
| 40 | 4002-3331-01 | BUSHING PF-115/208 | | 2 | 210, 220, 230, 410, 420, 430 |
| 41 | 4425-3103-12 | ROLL PF-115/208 | | 4 | 210, 220, 230, 410, 420, 430 |
| 42 | 4002-3318-01 | STOPPER PF-115/208 | | 1 | 210, 220, 230, 410, 420, 430 |
| 43 | 4002-3318-01 | STOPPER PF-208 | | 1 | 210, 220, 230 |
| 44 | 9352-6310-11 | HEATER OPTION (H5) | | 1 | 220, 230, 420, 430 |
| 45 | 4425-3750-01 | RUBBER STRIP PF-115 | | 1 | 410, 420, 430 |
| 46 | 4640-0101-03 | PWB ASSY PF-208 (PWB-A) | RP | 1 | 210, 220, 230 |
| 46 | 4640-0102-03 | PWB ASSY PF-115 (PWB-A) | RP | 1 | 410, 420, 430 |
| 46 | 4640-0103-03 | PWB ASSY PF-7D (PWB-A) | RP | 1 | 120, 130 |
| 47 | 4002-7318-01 | LABEL PF-115/208 | | 1 | 210, 410 |

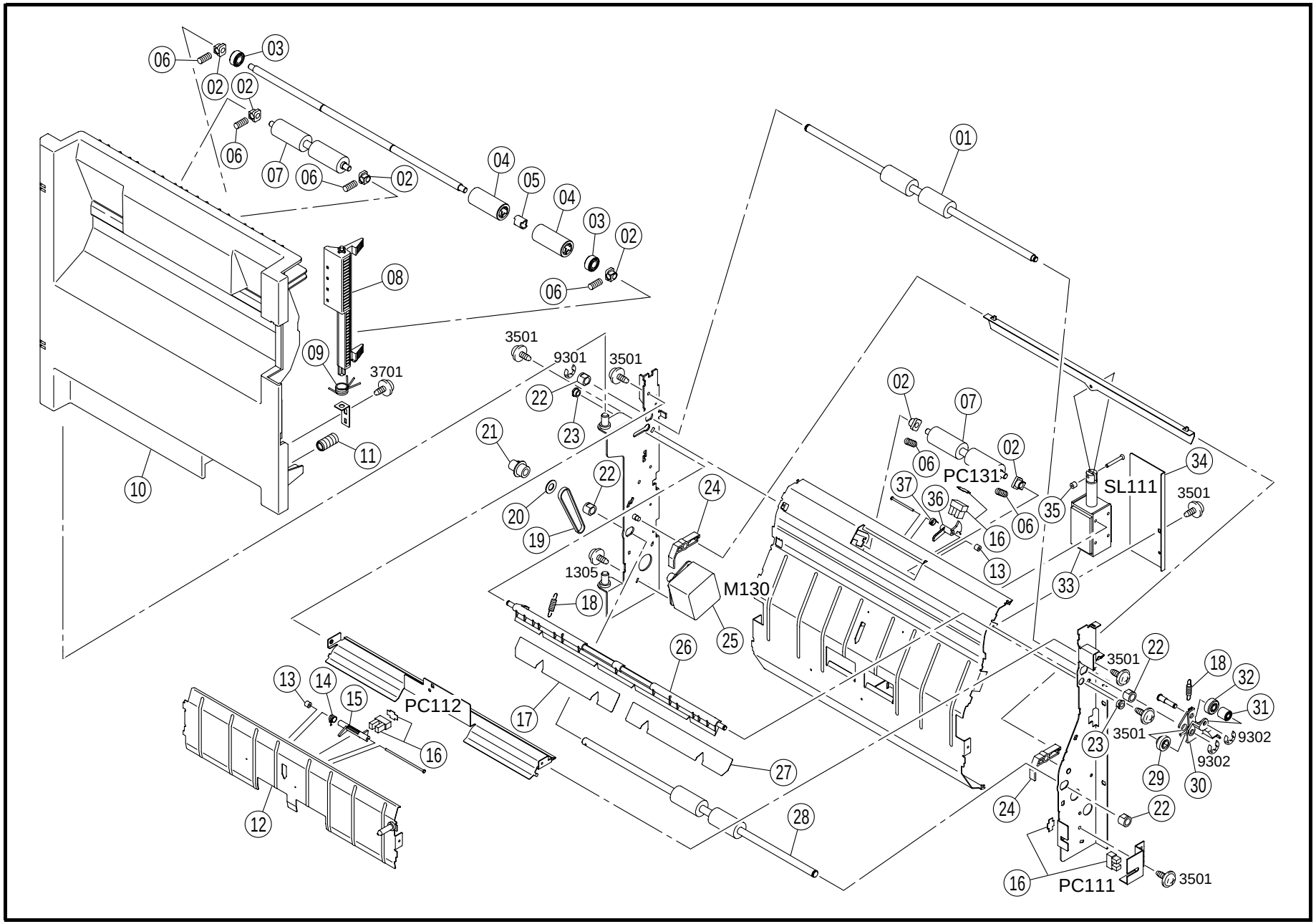
06
03
02
02
06
07
06
02
04
05
04
03
02
06
08
09
3701
11
10
3501
9301
3501
22
23
21
20
19
22
24
1305
18
M130
25
26
17
27
28
13
14
15
PC112
16
12
02
07
06
02
PC131
37
36
16
13
06
35
SL111
34
3501
33
3501
22
18
32
31
3501
9302
9302
23
29
30
24
22
16
PC111
3501

| INDEX | PART NO. | PART NAME | REC | QTY |
|---|---|---|---|---|
| 01 | 4640-3808-01 | ROLLER | | 1 |
| 02 | 4002-3704-01 | BUSHING | | 6 |
| 03 | 1155-3816-01 | ROLL | | 2 |
| 04 | 1155-3822-03 | ROLL | | 2 |
| 05 | 1155-3853-01 | COLLAR | | 1 |
| 06 | 4002-3705-01 | PRESSURE SPRING | | 6 |
| 07 | 4002-3703-01 | ROLLER | | 2 |
| 08 | 4640-3819-01 | HANDLE | | 1 |
| 09 | 4640-3822-01 | TORSION SPRING | | 1 |
| 10 | 4640-3816-01 | LEFT COVER | | 1 |
| 11 | 1149-3454-01 | PRESSURE SPRING | | 1 |
| 12 | 4640-0203-02 | GUIDE ASSY | | 1 |
| 13 | 1200-2105-06 | RETAINING RING | | 2 |
| 14 | 1075-3576-02 | TORSION SPRING | | 1 |
| 15 | 1075-3572-01 | ACTUATOR | | 1 |
| 16 | 4640-0902-01 | PHOTO INTERRUPTER (PC111.112.131) | | 3 |
| 17 | 4640-3832-01 | GUIDE | | 1 |
| 18 | 4640-3814-02 | TENSION SPRING | | 2 |
| 19 | 4640-3826-01 | TIMING BELT | | 1 |
| 20 | 1200-1566-04 | WASHER | | 1 |
| 21 | 1155-3845-01 | PULLEY 22T | | 1 |
| 22 | 1200-3134-16 | BUSHING | | 4 |
| 23 | 1067-5508-01 | BUSHING | | 2 |
| 24 | 4640-3811-01 | LEVER | | 2 |
| 25 | 9314-1911-11 | MOTOR TURNOVER (M130) | | 1 |
| 26 | 4640-3807-01 | GUIDE | | 1 |
| 27 | 4640-3831-01 | GUIDE | | 1 |
| 28 | 4640-3809-01 | ROLLER | | 1 |
| 29 | 4425-3957-01 | GEAR 16T | | 1 |
| 30 | 4640-3827-01 | HOLDER | | 1 |
| 31 | 4425-3955-01 | COLLAR | | 1 |
| 32 | 4425-3954-12 | GEAR | | 1 |
| 33 | 9321-2910-81 | SOLENOID (SL111) | | 1 |
| 34 | 4640-3825-01 | COVER | | 1 |
| 35 | 1200-2105-02 | COLLAR | | 1 |
| 36 | 4640-3928-01 | ACTUATOR | | 1 |
| 37 | 4425-3935-01 | TORSION SPRING | | 1 |

| INDEX | PART NO. | PART NAME | REC | QTY | SFIX |
|---|---|---|---|---|---|
| | | | | | |

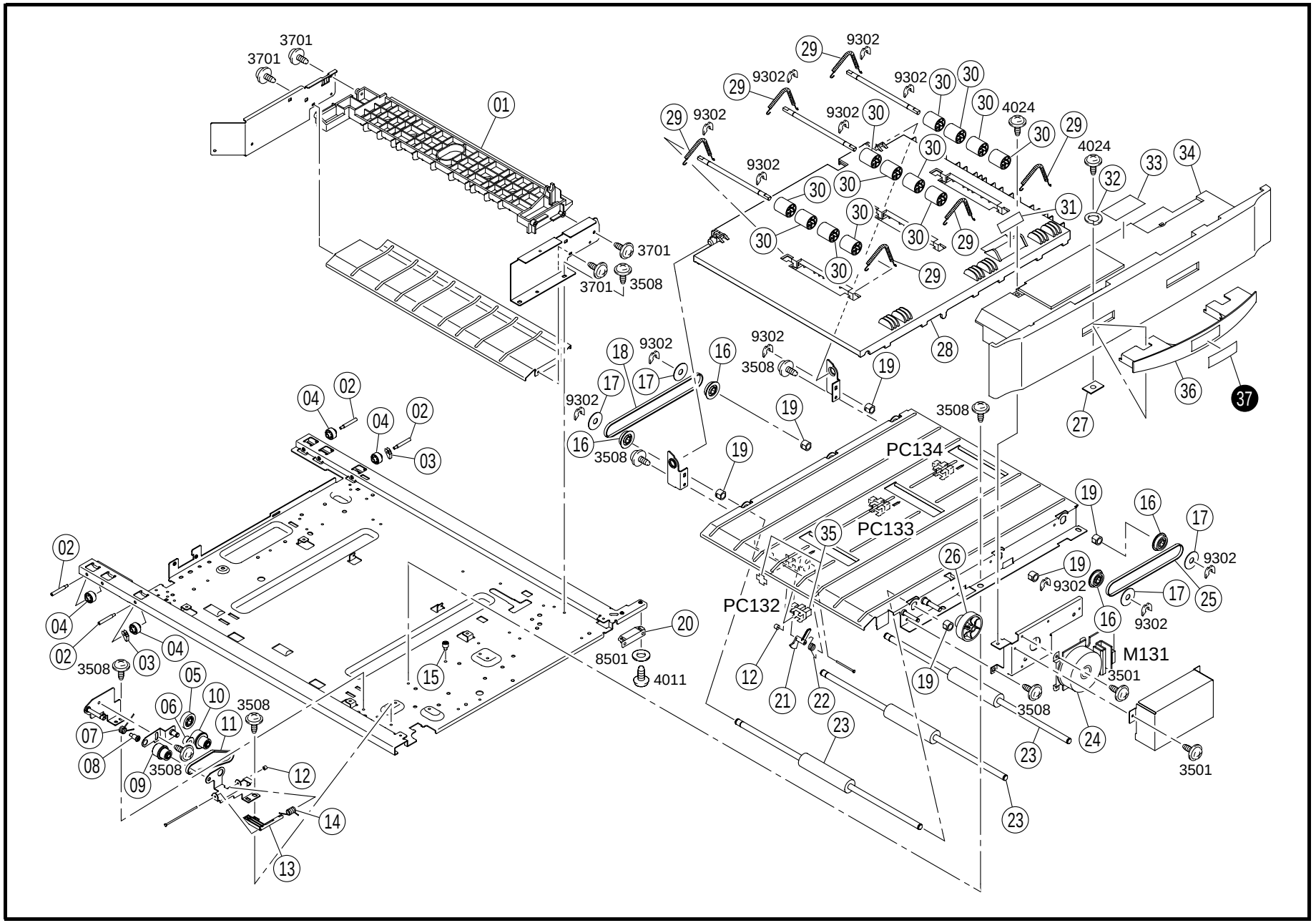
3701
3701
01
3701
3701
3508
29
9302
30
4024
31
32
33
34
28
27
36
37
18
16
17
19
3508
PC134
PC133
PC132
35
26
25
M131
3501
02
04
03
05
06
10
11
07
08
09
12
13
14
15
20
8501
4011
21
22
23
24

| INDEX | PART NO. | PART NAME | REC | QTY |
|---|---|---|---|---|
| 01 | 4640-3908-02 | GUIDE | | 1 |
| 02 | 4425-3840-01 | SHOULDER SCREW | | 4 |
| 03 | 4450-3822-01 | STOPPER | | 2 |
| 04 | 4425-3842-01 | ROLL | | 4 |
| 05 | 4640-3935-01 | GEAR | | 1 |
| 06 | 4425-3742-02 | PULLEY 20T | | 1 |
| 07 | 4640-3924-01 | TORSION SPRING | | 1 |
| 08 | 1100-1332-14 | SHOULDER SCREW | | 1 |
| 09 | 4640-3936-01 | PULLEY | | 1 |
| 10 | 4640-3921-01 | PULLEY | | 1 |
| 11 | 4640-3920-01 | BELT | | 1 |
| 12 | 1200-2105-06 | RETAINING RING | | 4 |
| 13 | 4640-3915-01 | LEVER | | 1 |
| 14 | 4640-3917-01 | TORSION SPRING | | 1 |
| 15 | 4640-3938-01 | SHOULDER SCREW | | 1 |
| 16 | 4640-3934-01 | PULLEY | | 4 |
| 17 | 1200-1866-01 | WASHER | | 4 |
| 18 | 0966-3906-01 | TIMING BELT | | 1 |

| INDEX | PART NO. | PART NAME | REC | QTY |
|---|---|---|---|---|
| 19 | 1200-3134-16 | BUSHING | | 6 |
| 20 | 4425-3372-01 | MAGNET CATCH | | 1 |
| 21 | 4640-3928-01 | ACTUATOR | | 3 |
| 22 | 4425-3935-01 | TORSION SPRING | | 3 |
| 23 | 4640-3910-01 | ROLLER | | 3 |
| 24 | 9314-2911-02 | MOTOR TRANSPORT (M131) | | 1 |
| 25 | 4640-3919-01 | BELT | | 1 |
| 26 | 4640-3909-01 | GEAR | | 1 |
| 27 | 1139-3153-01 | PLATE NUT | | 2 |
| 28 | 4640-3904-01 | GUIDE | | 1 |
| 29 | 1155-3911-01 | TENSION SPRING | | 6 |
| 30 | 4425-3103-12 | ROLL | | 12 |
| 31 | 4640-7305-01 | LABEL | | 1 |
| 32 | 1200-1531-01 | WASHER | | 1 |
| 33 | 4640-7306-01 | LABEL | | 1 |
| 34 | 4640-1109-03 | COVER | | 1 |
| 35 | 4640-0903-01 | PHOTO INTERRUPTER (PC132.133.134) | | 3 |
| 36 | 4002-3121-02 | HANDLE | | 1 |

| INDEX | PART NO. | PART NAME | REC | QTY | SFIX |
|---|---|---|---|---|---|
| 37 | 4479-7318-01 | LABEL | | 1 | 120, 220, 420 |
| 37 | 4479-7319-01 | DUPLEX LABEL | | 1 | 210, 410 |
| 37 | 4479-7320-01 | LABEL DUPLEX | | 1 | 130, 230, 430 |

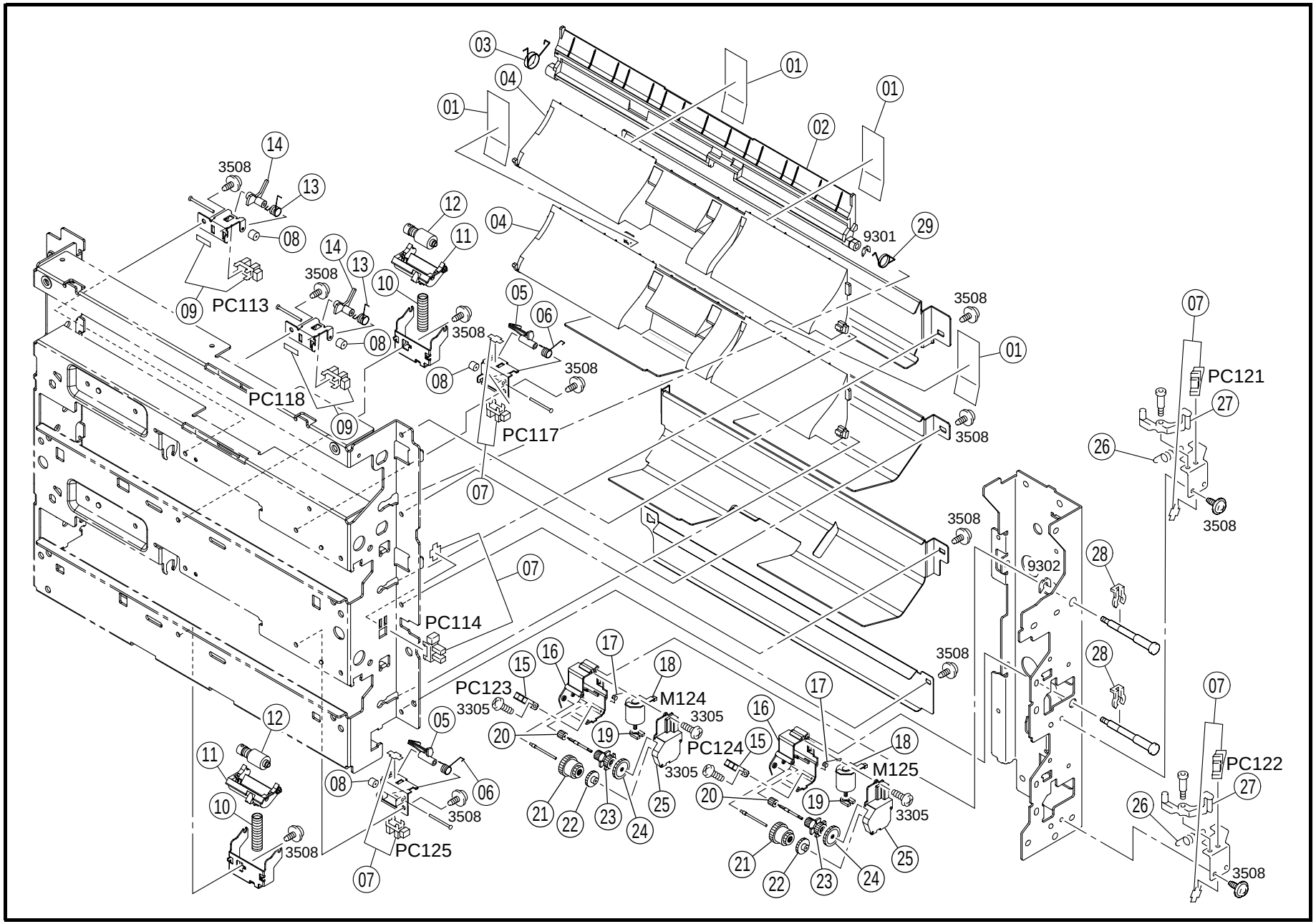
03
04
01
01
01
02
14
3508
13
12
11
04
9301
29
08
14
13
3508
10
05
06
3508
09
PC113
08
3508
08
3508
01
07
PC121
27
PC118
09
PC117
3508
26
07
3508
3508
9302
28
07
PC114
3508
28
16
17
15
18
PC123
M124
3305
3305
17
07
12
05
20
19
16
15
18
PC124
M125
11
08
06
3305
PC122
27
10
3508
21
22
23
24
25
20
19
3305
26
3508
PC125
21
22
23
24
25
07
3508

| INDEX | PART NO. | PART NAME | REC | QTY |
|---|---|---|---|---|
| 01 | 4002-3344-01 | GUIDE | | 4 |
| 02 | 4640-3304-02 | GUIDE | | 1 |
| 03 | 4425-3138-02 | TORSION SPRING | | 1 |
| 04 | 4002-3304-01 | GUIDE | | 2 |
| 05 | 4002-3321-01 | ACTUATOR | | 2 |
| 06 | 4002-3330-01 | TORSION SPRING | | 2 |
| 07 | 4640-0903-01 | PHOTO INTERRUPTER (PC114.117.121.122.125) | | 5 |
| 08 | 1200-2105-06 | RETAINING RING | | 4 |
| 09 | 4640-0902-01 | PHOTO INTERRUPTER (PC113.118) | | 2 |
| 10 | 4425-3024-01 | PRESSURE SPRING | | 2 |
| 11 | 4425-3021-02 | HOLDER | | 2 |
| 12 | 4425-0152-02 | ROLLER | RP | 2 |
| 13 | 4425-3032-01 | TORSION SPRING | | 2 |
| 14 | 4425-3626-01 | ACTUATOR | | 2 |
| 15 | 9335-1310-41 | PHOTO INTERRUPTER SET (PC123.124) | | 2 |
| 16 | 4425-3204-13 | HOLDER | | 2 |
| 17 | 4425-3225-02 | TORSION SPRING | | 2 |
| 18 | 4002-0751-01 | MOTOR ASSY LIFT (M124.125) | | 2 |
| 19 | 4425-3227-02 | SUPPORT | | 2 |
| 20 | 4425-3208-01 | GEAR 12T | | 2 |
| 21 | 4425-3212-01 | GEAR 16/40T | | 2 |
| 22 | 4425-3206-01 | GEAR 18/48T | | 2 |
| 23 | 4425-3205-01 | GEAR 28/30T | | 2 |
| 24 | 4425-3207-01 | GEAR 60T | | 2 |
| 25 | 4425-3224-13 | COVER | | 2 |
| 26 | 4425-3242-02 | TENSION SPRING | | 2 |
| 27 | 4425-3241-03 | LEVER | | 2 |
| 28 | 1033-4402-01 | STOPPER RING | | 2 |
| 29 | 4425-3139-01 | TORSION SPRING | | 1 |

| INDEX | PART NO. | PART NAME | REC | QTY | SFIX |
|---|---|---|---|---|---|

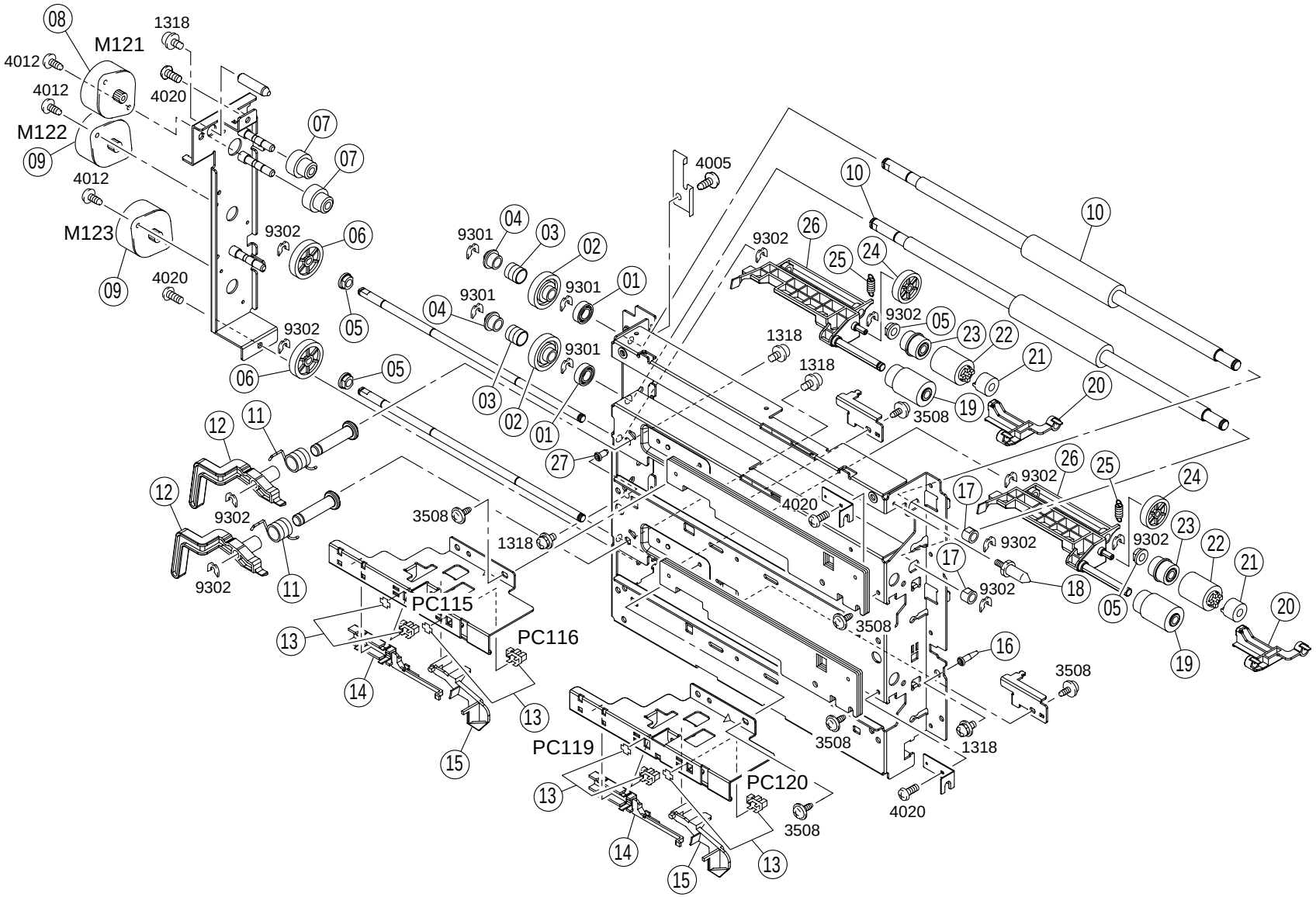
M121
M122
M123
PC115
PC116
PC119
PC120
1318
4012
4020
9302
9301
4005
3508
08
09
07
06
05
04
03
02
01
10
26
25
24
23
22
21
20
19
18
17
16
15
14
13
12
11
27

| INDEX | PART NO. | PART NAME | REC | QTY |
|---|---|---|---|---|
| 01 | 1273-3516-01 | BALL BEARING | | 2 |
| 02 | 4002-3339-01 | GEAR | | 2 |
| 03 | 4425-3130-01 | CLUTCH SPRING | | 2 |
| 04 | 4002-3326-01 | COLLAR | | 2 |
| 05 | 1159-1938-01 | BUSHING | | 4 |
| 06 | 4002-3323-01 | GEAR | | 2 |
| 07 | 4640-3316-12 | GEAR | | 2 |
| 08 | 9314-1000-41 | MOTOR TRANSPORT (M121) | | 1 |
| 09 | 9314-1000-72 | MOTOR TAKE-UP (M122.123) | | 2 |
| 10 | 4002-3306-01 | ROLLER | | 2 |
| 11 | 4002-3212-01 | TORSION SPRING | | 2 |
| 12 | 4002-3211-01 | LEVER | | 2 |
| 13 | 4640-0903-01 | PHOTO INTERRUPTER (PC115.116.119.120) | | 4 |
| 14 | 4002-3213-01 | COVER | | 2 |
| 15 | 4002-3208-01 | LEVER | | 2 |
| 16 | 1134-3169-02 | SHAFT | | 1 |
| 17 | 1200-3134-16 | BUSHING | | 2 |
| 18 | 4425-3234-02 | SHOULDER SCREW | | 1 |
| 19 | 4002-3201-01 | ROLLER | RP | 2 |
| 20 | 4002-3214-02 | GUIDE | | 2 |
| 21 | 4002-3217-01 | CLUTCH | | 2 |
| 22 | 4002-3216-01 | ROLLER | RP | 2 |
| 23 | 4002-3203-01 | GEAR | | 2 |
| 24 | 4002-3209-01 | GEAR | | 2 |
| 25 | 4002-3205-01 | TENSION SPRING | | 2 |
| 26 | 4002-3206-03 | HOLDER | | 2 |
| 27 | 4425-3115-01 | SHAFT | | 1 |

| INDEX | PART NO. | PART NAME | REC | QTY | SFIX |
|---|---|---|---|---|---|

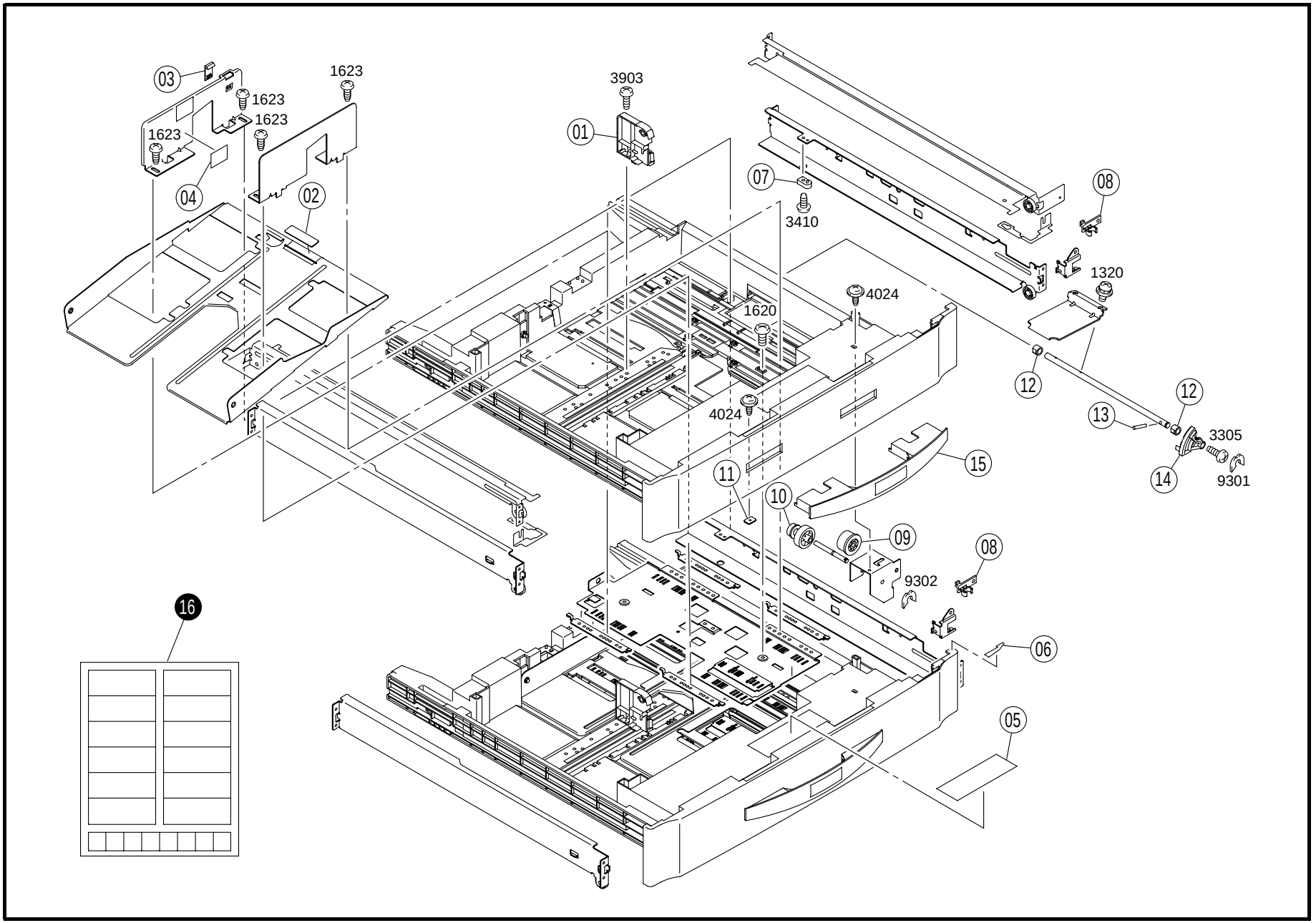
03
1623
1623
1623
1623
04
02
3903
01
07
3410
08
1320
4024
1620
4024
12
12
13
3305
14
9301
15
11
10
09
08
9302
06
05
16

| INDEX | PART NO. | PART NAME | REC | QTY | INDEX | PART NO. | PART NAME | REC | QTY |
|---|---|---|---|---|---|---|---|---|---|
| 01 | 4002-3119-01 | REGULATING PLATE | | 2 | | | | | |
| 02 | 4425-3257-01 | CORK | | 2 | | | | | |
| 03 | 4002-3130-02 | HOLDER | | 2 | | | | | |
| 04 | 4002-7306-01 | LABEL | | 2 | | | | | |
| 05 | 4640-7307-01 | LABEL | | 2 | | | | | |
| 06 | 4002-3136-02 | SEAL | | 2 | | | | | |
| 07 | 4002-3125-01 | HOLDER | | 2 | | | | | |
| 08 | 4002-3123-01 | HOLDER | | 2 | | | | | |
| 09 | 4425-3217-01 | GEAR | | 2 | | | | | |
| 10 | 4425-3216-02 | GEAR | | 2 | | | | | |
| 11 | 1139-3153-01 | PLATE NUT | | 4 | | | | | |
| 12 | 1200-3134-16 | BUSHING | | 4 | | | | | |
| 13 | 4425-3213-01 | PIN | | 2 | | | | | |
| 14 | 4425-3203-05 | SEGMENT GEAR | | 2 | | | | | |
| 15 | 4002-3121-02 | HANDLE | | 2 | | | | | |

| INDEX | PART NO. | PART NAME | REC | QTY | SFIX |
|---|---|---|---|---|---|
| 16 | 1151-7371-01 | LABEL | | 1 | 210, 220 |
| 16 | 1151-7372-01 | LABEL | | 1 | 230 |

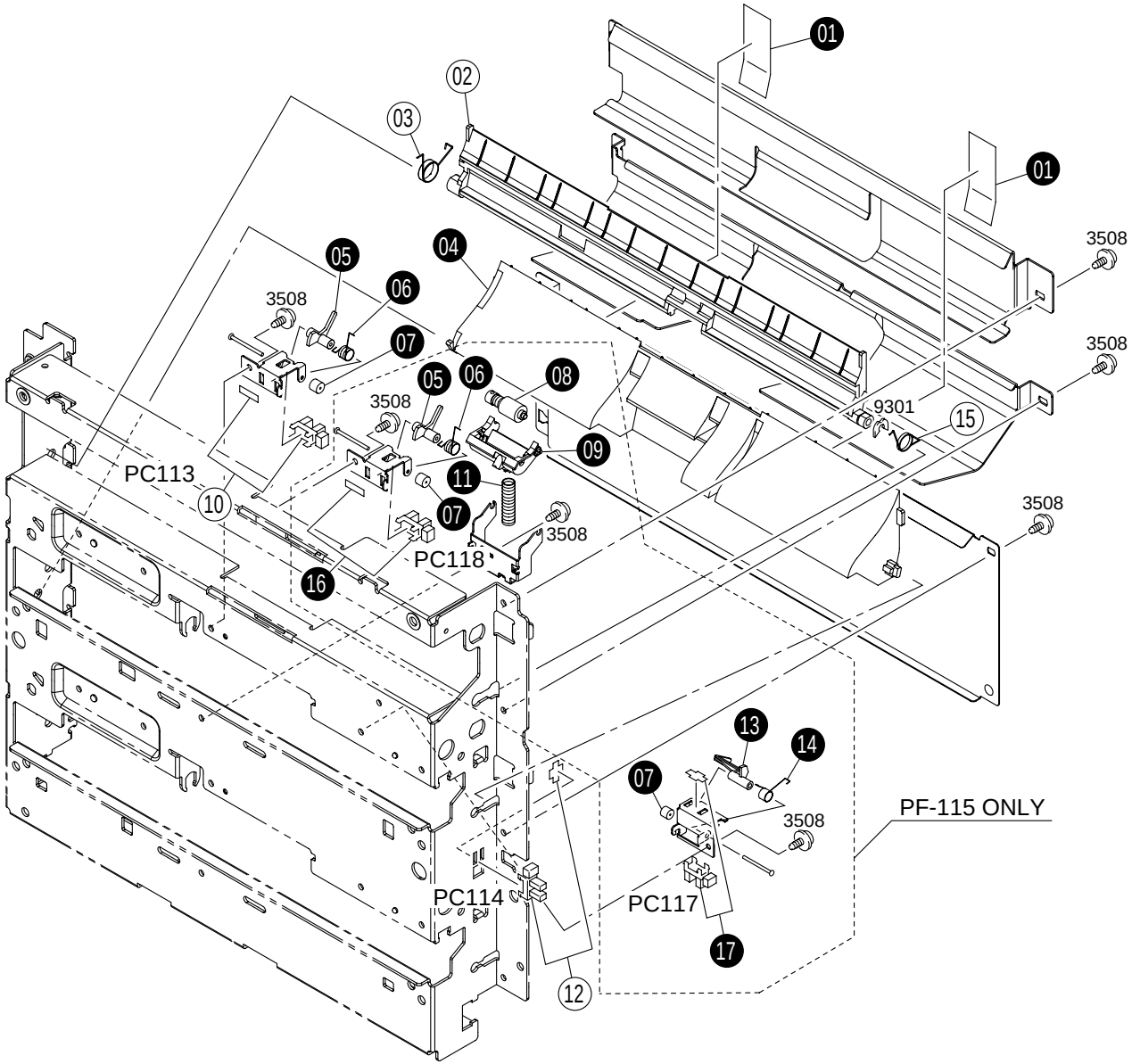
01
02
03
01
3508
3508
04
05
06
3508
07
05
06
08
3508
9301
15
09
PC113
11
10
07
3508
3508
PC118
16
13
14
07
3508
PF-115 ONLY
PC114
PC117
17
12

| INDEX | PART NO. | PART NAME | | REC | QTY | INDEX | PART NO. | PART NAME | REC | QTY |
|---|---|---|---|---|---|---|---|---|---|---|
| 02 | 4640-3304-02 | GUIDE | | | 1 | | | | | |
| 03 | 4425-3138-02 | TORSION SPRING | | | 1 | | | | | |
| 10 | 4640-0902-01 | PHOTO INTERRUPTER | (PC113) | | 1 | | | | | |
| 12 | 4640-0903-01 | PHOTO INTERRUPTER | (PC114) | | 1 | | | | | |
| 15 | 4425-3139-01 | TORSION SPRING | | | 1 | | | | | |

| INDEX | PART NO. | PART NAME | | | REC | QTY | SFIX |
|---|---|---|---|---|---|---|---|
| 01 | 4002-3344-01 | GUIDE | PF-115 | | | 2 | 410, 420, 430 |
| 04 | 4002-3304-01 | GUIDE | PF-115 | | | 1 | 410, 420, 430 |
| 05 | 4425-3626-01 | ACTUATOR | PF-115 | | | 2 | 410, 420, 430 |
| 05 | 4425-3626-01 | ACTUATOR | PF-7D | | | 1 | 120, 130 |
| 06 | 4425-3032-01 | TORSION SPRING | PF-115 | | | 2 | 410, 420, 430 |
| 06 | 4425-3032-01 | TORSION SPRING | PF-7D | | | 1 | 120, 130 |
| 07 | 1200-2105-06 | RETAINING RING | PF-115 | | | 3 | 410, 420, 430 |
| 07 | 1200-2105-06 | RETAINING RING | PF-7D | | | 1 | 120, 130 |
| 08 | 4425-0152-02 | ROLLER | PF-115 | | RP | 1 | 410, 420, 430 |
| 09 | 4425-3021-02 | HOLDER | PF-115 | | | 1 | 410, 420, 430 |
| 11 | 4425-3024-01 | PRESSURE SPRING | PF-115 | | | 1 | 410, 420, 430 |
| 13 | 4002-3321-01 | ACTUATOR | PF-115 | | | 1 | 410, 420, 430 |
| 14 | 4002-3330-01 | TORSION SPRING | PF-115 | | | 1 | 410, 420, 430 |
| 16 | 4640-0902-01 | PHOTO INTERRUPTER | PF-115 | (PC118) | | 1 | 410, 420, 430 |
| 17 | 4640-0903-01 | PHOTO INTERRUPTER | PF-115 | (PC117) | | 1 | 410, 420, 430 |

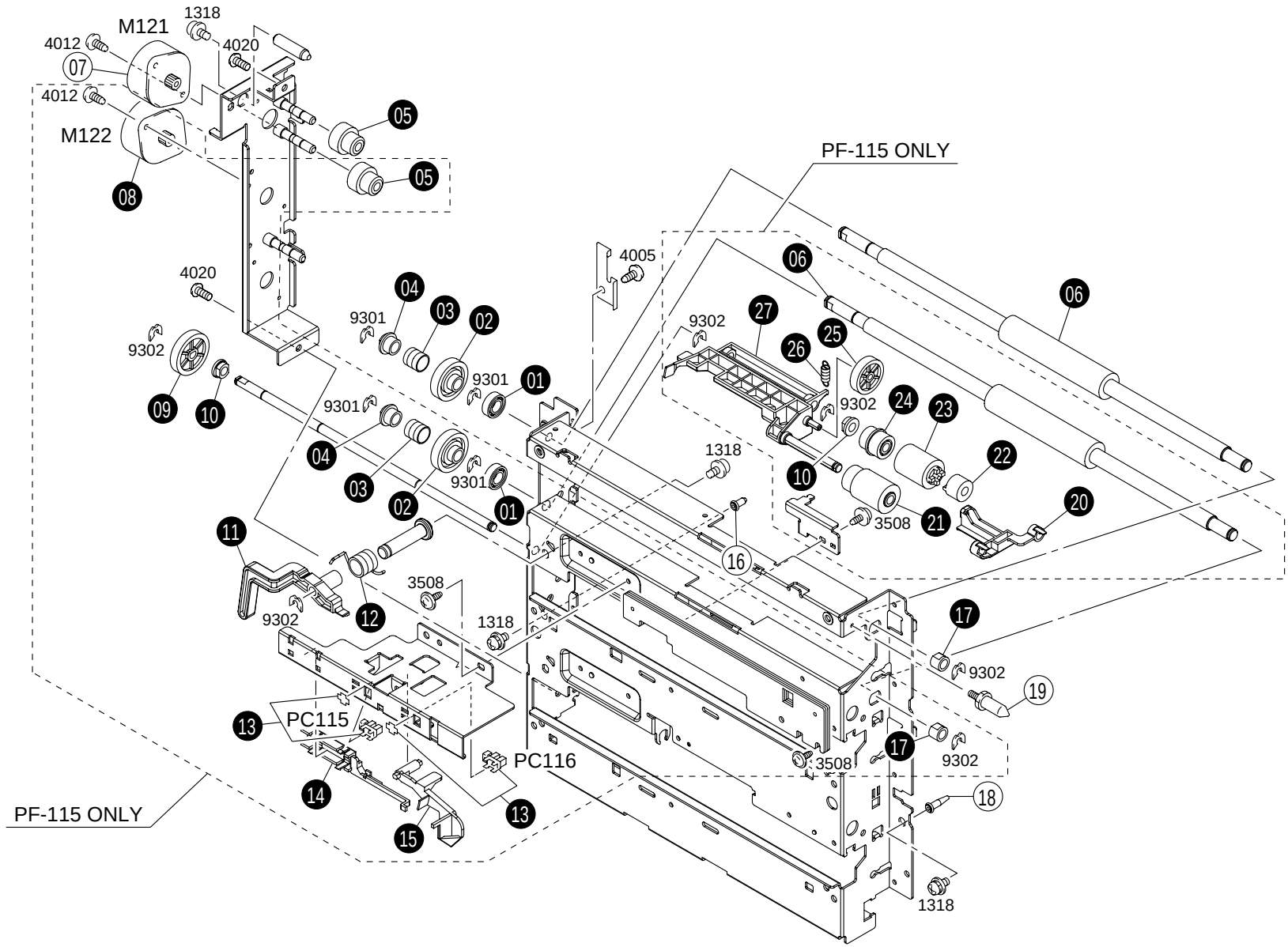
M121
1318
4012
4020
07
4012
M122
05
05
08
PF-115 ONLY
4005
06
06
4020
04
03
02
9301
9302
27
25
26
9302
9301
01
09
10
9301
24
23
04
1318
22
03
9301
10
02
01
3508
21
20
11
16
3508
12
9302
1318
17
9302
19
13
PC115
PC116
17
3508
9302
14
18
PF-115 ONLY
13
15
1318

| INDEX | PART NO. | PART NAME | REC | QTY | INDEX | PART NO. | PART NAME | REC | QTY |
|---|---|---|---|---|---|---|---|---|---|
| 07 | 9314-1000-41 | MOTOR TRANSPORT (M121) | | 1 | 18 | 1134-3169-02 | SHAFT | | 1 |
| 16 | 4425-3115-01 | SHAFT | | 1 | 19 | 4425-3234-02 | SHOULDER SCREW | | 1 |

| INDEX | PART NO. | PART NAME | REC | QTY | SFIX |
|---|---|---|---|---|---|
| 01 | 1273-3516-01 | BALL BEARING PF-115 | | 2 | 410, 420, 430 |
| 01 | 1273-3516-01 | BALL BEARING PF-7D | | 1 | 120, 130 |
| 02 | 4002-3339-01 | GEAR PF-115 | | 2 | 410, 420, 430 |
| 02 | 4002-3339-01 | GEAR PF-7D | | 1 | 120, 130 |
| 03 | 4425-3130-01 | CLUTCH SPRING PF-115 | | 2 | 410, 420, 430 |
| 03 | 4425-3130-01 | CLUTCH SPRING PF-7D | | 1 | 120, 130 |
| 04 | 4002-3326-01 | COLLAR PF-115 | | 2 | 410, 420, 430 |
| 04 | 4002-3326-01 | COLLAR PF-7D | | 1 | 120, 130 |
| 05 | 4640-3316-12 | GEAR PF-115 | | 2 | 410, 420, 430 |
| 05 | 4640-3316-12 | GEAR PF-7D | | 1 | 120, 130 |
| 06 | 4002-3306-01 | ROLLER PF-115 | | 2 | 410, 420, 430 |
| 06 | 4002-3306-01 | ROLLER PF-7D | | 1 | 120, 130 |
| 08 | 9314-1000-72 | MOTOR PF-115 (M122) | | 1 | 410, 420, 430 |
| 09 | 4002-3323-01 | GEAR PF-115 | | 1 | 410, 420, 430 |
| 10 | 1159-1938-01 | BUSHING PF-115 | | 2 | 410, 420, 430 |
| 11 | 4002-3211-01 | LEVER PF-115 | | 1 | 410, 420, 430 |
| 12 | 4002-3212-01 | TORSION SPRING PF-115 | | 1 | 410, 420, 430 |
| 13 | 4640-0903-01 | PHOTO INTERRUPTER PF-115 (PC115.116) | | 2 | 410, 420, 430 |
| 14 | 4002-3213-01 | COVER PF-115 | | 1 | 410, 420, 430 |
| 15 | 4002-3208-01 | LEVER PF-115 | | 1 | 410, 420, 430 |
| 17 | 1200-3134-16 | BUSHING PF-115 | | 2 | 410, 420, 430 |
| 17 | 1200-3134-16 | BUSHING PF-7D | | 1 | 120, 130 |
| 20 | 4002-3214-02 | GUIDE PF-115 | | 1 | 410, 420, 430 |
| 21 | 4002-3201-01 | ROLLER PF-115 | RP | 1 | 410, 420, 430 |
| 22 | 4002-3217-01 | CLUTCH PF-115 | | 1 | 410, 420, 430 |
| 23 | 4002-3216-01 | ROLLER PF-115 | RP | 1 | 410, 420, 430 |
| 24 | 4002-3203-01 | GEAR PF-115 | | 1 | 410, 420, 430 |
| 25 | 4002-3209-01 | GEAR PF-115 | | 1 | 410, 420, 430 |
| 26 | 4002-3205-01 | TENSION SPRING PF-115 | | 1 | 410, 420, 430 |
| 27 | 4002-3206-03 | HOLDER PF-115 | | 1 | 410, 420, 430 |

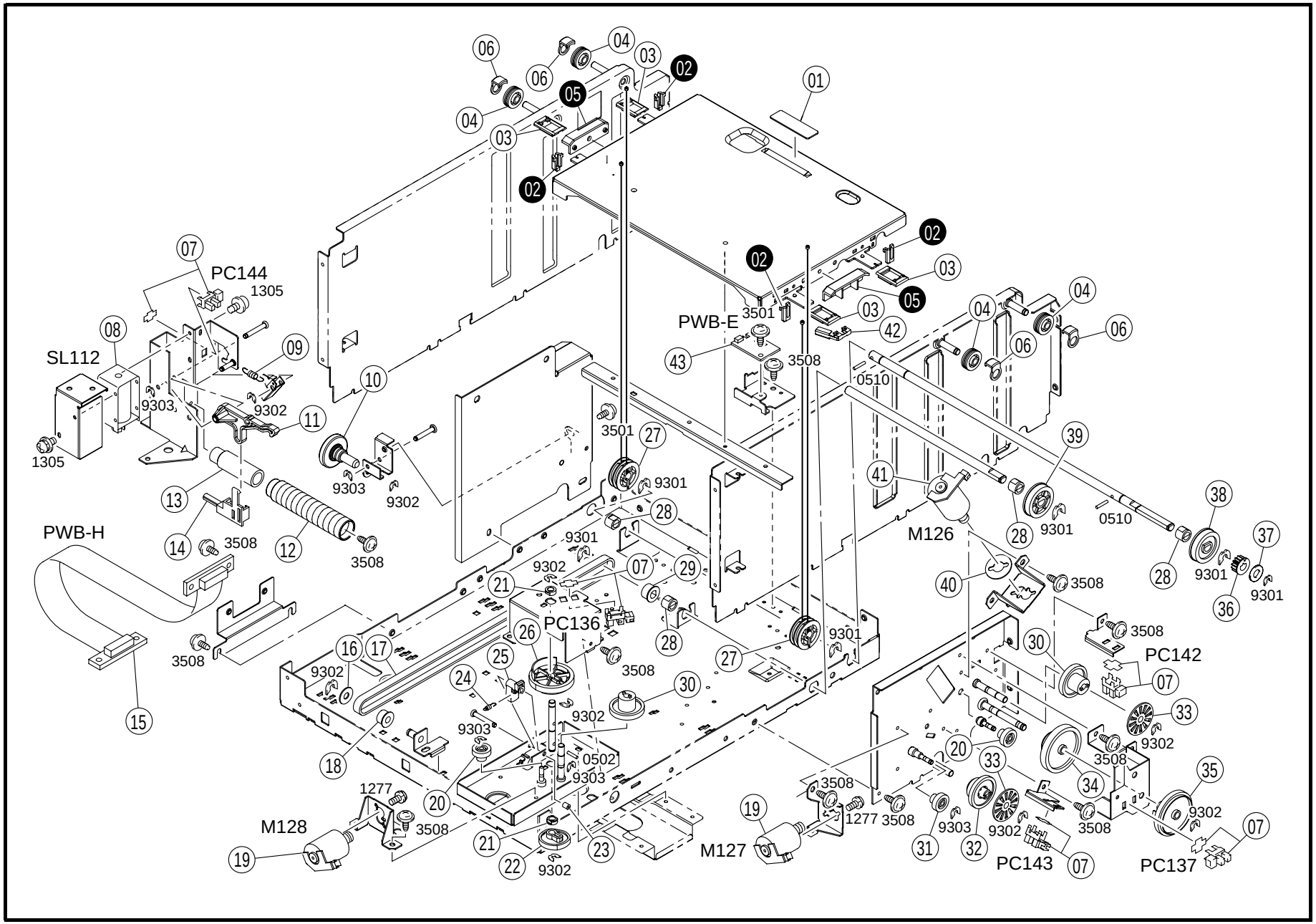
PC144
1305
SL112
9303
9302
1305
PWB-H
3508
PWB-E
3501
3508
0510
M126
9301
0510
PC136
3508
9302
9303
0502
9303
1277
M128
3508
M127
1277
3508
PC142
3508
9302
PC143
3508
PC137
9302

| INDEX | PART NO. | PART NAME | REC | QTY |
|---|---|---|---|---|
| 01 | 1052-5409-01 | CORK | | 1 |
| 03 | 1075-3708-13 | HOLDER | | 4 |
| 04 | 4425-3715-01 | WIRE PULLEY | | 4 |
| 06 | 4425-3770-01 | SUPPORT | | 4 |
| 07 | 4640-0903-01 | PHOTO INTERRUPTER (PC136.137.142.144) | | 5 |
| 08 | 9321-2620-41 | SOLENOID LOCK (SL112) | | 1 |
| 09 | 1075-3762-01 | TENSION SPRING | | 1 |
| 10 | 4425-3761-01 | SHOULDER SCREW | | 1 |
| 11 | 4425-3758-02 | PAWL | | 1 |
| 12 | 4425-3766-13 | PRESSURE SPRING | | 1 |
| 13 | 4425-3745-01 | HOLDER | | 1 |
| 14 | 4640-3710-01 | LEVER | | 1 |
| 15 | 4479-0105-01 | PW BOARD-H (PWB-H) | | 1 |
| 16 | 1200-1541-04 | WASHER | | 1 |
| 17 | 4425-3747-01 | TIMING BELT | | 1 |
| 18 | 4425-3742-02 | PULLEY 20T | | 1 |
| 19 | 4002-0751-01 | MOTOR ASSY (M127.128) | | 2 |
| 20 | 4425-3723-01 | GEAR 16/20T | | 2 |
| 21 | 1200-3120-03 | BUSHING | | 2 |
| 22 | 4479-3714-01 | CAM | | 1 |
| 23 | 1200-2105-06 | RETAINING RING | | 1 |

| INDEX | PART NO. | PART NAME | REC | QTY |
|---|---|---|---|---|
| 24 | 4479-3717-01 | TENSION SPRING | | 1 |
| 25 | 4479-3718-01 | STOPPER | | 1 |
| 26 | 4479-3713-01 | GEAR 40T | | 1 |
| 27 | 4425-3714-01 | WIRE PULLEY | | 2 |
| 28 | 1200-3134-16 | BUSHING | | 4 |
| 29 | 4425-3743-02 | PULLEY 22T | | 1 |
| 30 | 4425-3726-01 | GEAR 14/63T | | 2 |
| 31 | 4425-3723-01 | GEAR 16/20T | | 1 |
| 32 | 4425-3754-01 | GEAR 18/63T | | 1 |
| 33 | 4425-3729-02 | SYNCHRONIZING DISK | | 2 |
| 34 | 4479-3741-02 | GEAR 23/45T | | 1 |
| 35 | 4479-3746-01 | GEAR 43T | | 1 |
| 36 | 4479-3745-01 | GEAR 14T | | 1 |
| 37 | 1200-1566-07 | COLLAR | | 1 |
| 38 | 4479-3748-02 | GEAR 34T | | 1 |
| 39 | 4425-3755-03 | GEAR 30T | | 1 |
| 40 | 4425-3799-01 | CUSHION | | 1 |
| 41 | 4425-0753-01 | MOTOR ELEVATOR (M126) | | 1 |
| 42 | 1075-3769-01 | GROUND PLATE | | 1 |
| 43 | 4425-0104-02 | PW BOARD-E EMPTY (PWB-E) | | 1 |

| INDEX | PART NO. | PART NAME | REC | QTY | SFIX |
|---|---|---|---|---|---|
| 02 | 1075-3709-01 | SPACER | | 4 | 430 |
| 05 | 1075-3755-01 | SPACER | | 2 | 410, 420 |

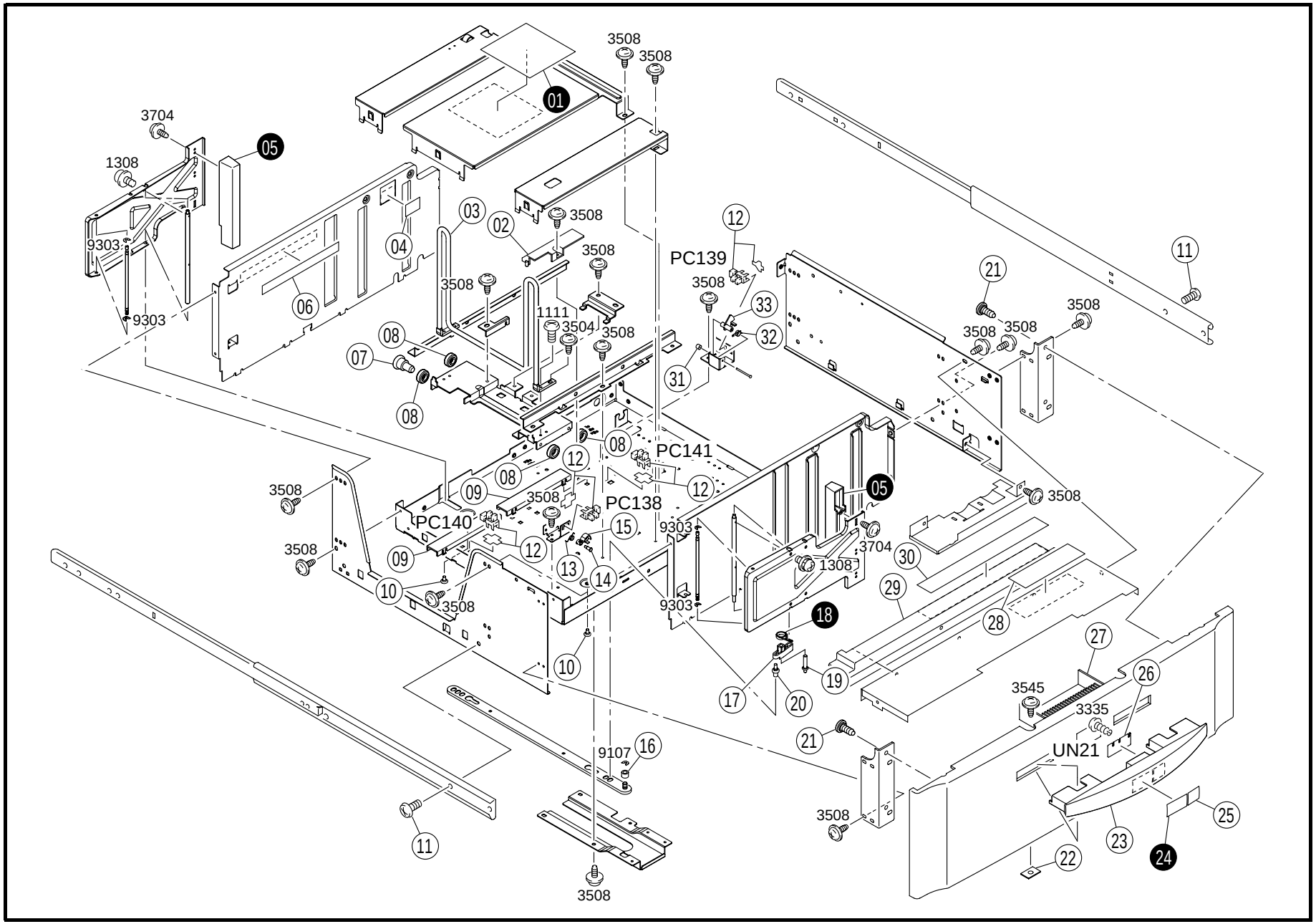
3508
3508
01
3704
05
1308
9303
9303
03
02
04
06
3508
3508
3508
1111
3504
3508
08
07
08
12
PC139
3508
33
32
31
21
11
3508
3508
3508
08
PC141
12
08
09
3508
PC138
12
05
3508
3508
PC140
15
9303
3704
30
3508
09
12
13
14
1308
29
10
3508
9303
18
28
27
10
19
26
17
20
3545
3335
21
UN21
9107
16
3508
25
11
23
22
24
3508

| INDEX | PART NO. | PART NAME | REC | QTY |
|---|---|---|---|---|
| 02 | 4444-3744-01 | COVER | | 1 |
| 03 | 4425-3732-03 | ARM | | 1 |
| 04 | 4425-7341-01 | LABEL MAX LEVEL | | 1 |
| 06 | 4479-7330-01 | LABEL | | 1 |
| 07 | 1273-3003-01 | SHOULDER SCREW | | 4 |
| 08 | 4425-3740-01 | ROLL | | 4 |
| 09 | 4425-3710-01 | GUIDE | | 2 |
| 10 | 1100-1340-10 | SHOULDER SCREW | | 2 |
| 11 | 1151-3300-01 | TAPPING SCREW | | 4 |
| 12 | 4640-0903-01 | PHOTO INTERRUPTER (PC138-141) | | 4 |
| 13 | 1074-3753-01 | TORSION SPRING | | 1 |
| 14 | 1100-1332-05 | SHOULDER SCREW | | 1 |
| 15 | 4425-3772-01 | LEVER | | 1 |
| 16 | 1200-2346-09 | COLLAR | | 1 |
| 17 | 4479-3708-01 | LEVER | | 1 |
| 19 | 1100-1944-02 | SHOULDER SCREW | | 1 |
| 20 | 4479-3709-01 | SHOULDER SCREW | | 1 |
| 21 | 4425-3756-01 | SHOULDER SCREW | | 4 |

| INDEX | PART NO. | PART NAME | REC | QTY |
|---|---|---|---|---|
| 22 | 4640-3108-01 | PLATE NUT | | 2 |
| 23 | 4640-1102-01 | COVER | | 1 |
| 25 | 4640-7301-01 | LABEL | | 1 |
| 26 | 4640-6002-01 | PWB ASSY DESCENT (UN21) | | 1 |
| 27 | 4640-1101-03 | COVER | | 1 |
| 28 | 4479-7303-01 | LABEL | | 1 |
| 29 | 4425-3702-04 | COVER | | 1 |
| 30 | 4479-7331-02 | LABEL | | 1 |
| 31 | 1200-2105-06 | RETAINING RING | | 1 |
| 32 | 4444-3743-01 | TORSION SPRING | | 1 |
| 33 | 4444-3741-01 | ACTUATOR | | 1 |

| INDEX | PART NO. | PART NAME | REC | QTY | SFIX |
|---|---|---|---|---|---|
| 01 | 4425-7343-01 | LABEL LETTER ONLY | | 1 | 430 |
| 01 | 4425-7344-01 | LABEL A4 ONLY | | 1 | 410, 420 |
| 05 | 4479-3702-02 | SPACER | | 2 | 410, 420 |
| 05 | 4479-3703-02 | SPACER | | 2 | 430 |
| 18 | 1161-3710-01 | TORSION SPRING | | 1 | 430 |
| 18 | 4479-3710-02 | TORSION SPRING | | 1 | 410, 420 |
| 24 | 4640-7303-01 | LABEL | | 1 | 410, 420 |
| 24 | 4640-7304-01 | LABEL | | 1 | 430 |

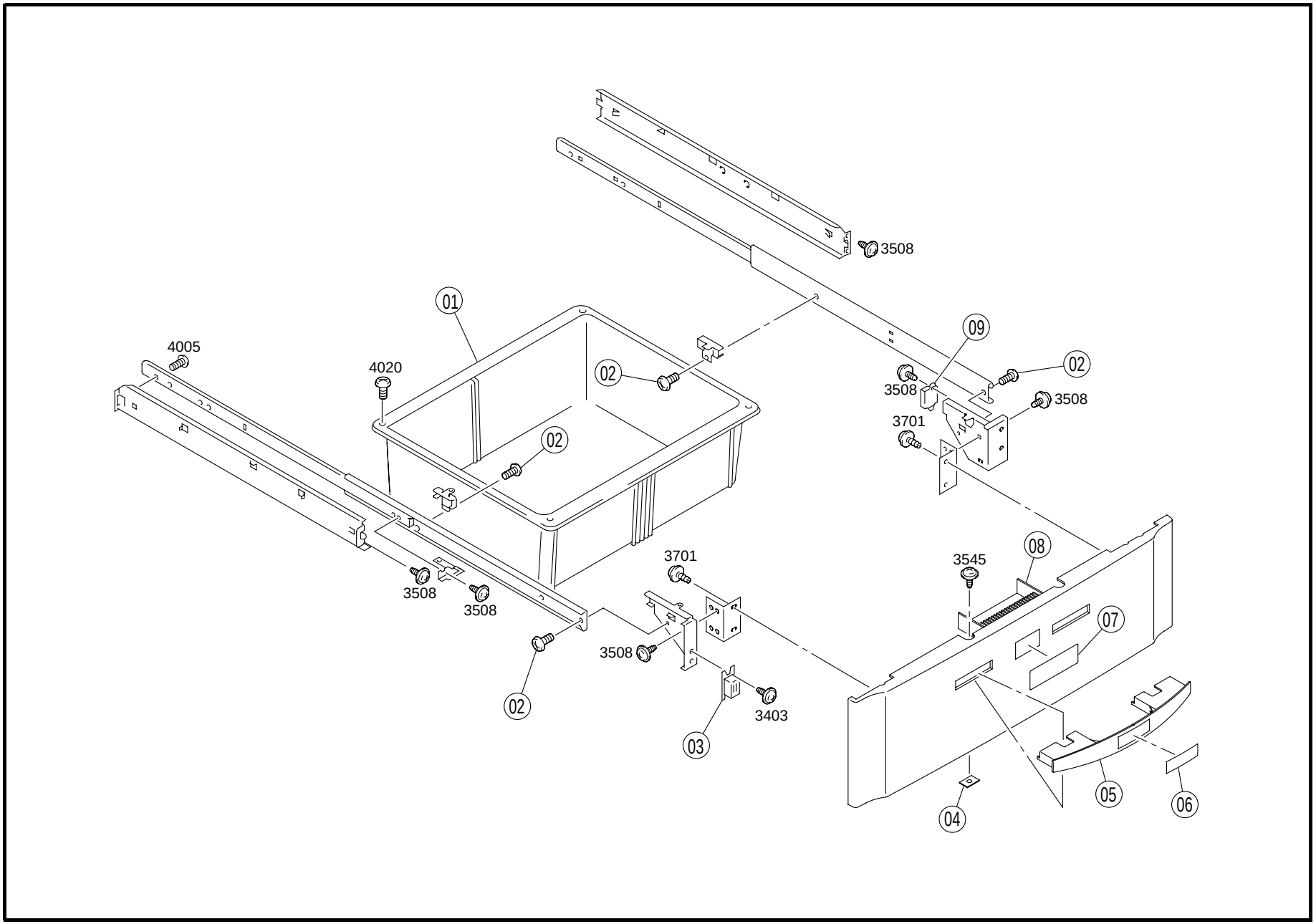
3508
01
4005
4020
02
09
02
3508
3508
3701
02
3701
3545
08
3508
3508
07
02
3508
3403
03
05
06
04

| INDEX | PART NO. | PART NAME | REC | QTY | INDEX | PART NO. | PART NAME | REC | QTY |
|---|---|---|---|---|---|---|---|---|---|
| 01 | 4425-2064-02 | BOX | | 1 | | | | | |
| 02 | 1151-3300-01 | TAPPING SCREW | | 4 | | | | | |
| 03 | 4479-3804-01 | MAGNET CATCH | | 1 | | | | | |
| 04 | 4640-3108-01 | PLATE NUT | | 2 | | | | | |
| 05 | 4002-3121-02 | HANDLE | | 1 | | | | | |
| 06 | 4425-7312-01 | LABEL STORAGE | | 1 | | | | | |
| 07 | 4640-3109-03 | SEAL | | 1 | | | | | |
| 08 | 4640-1101-03 | COVER | | 1 | | | | | |
| 09 | 4425-3249-02 | MAGNET CATCH | | 1 | | | | | |

| INDEX | PART NO. | PART NAME | REC | QTY | SFIX |
|---|---|---|---|---|---|
| | | | | | |

| | | | | | | | |
|---|---|---|---|---|---|---|---|
| 01 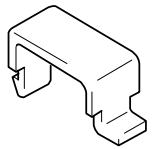 | 07 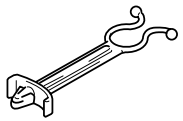 | | | | | | |
| 02 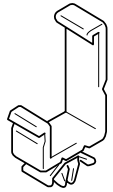 | 08 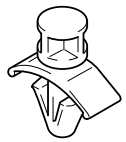 | | | | | | |
| 03 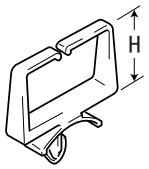  | 09  | | | | | | |
| 04 , 05 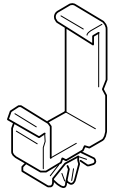 | | | | | | | |
| 06  | | | | | | | |

| INDEX | PART NO. | PART NAME | REC | QTY | INDEX | PART NO. | PART NAME | REC | QTY |
|---|---|---|---|---|---|---|---|---|---|
| 01 | 1065-5872-01 | CORD CLAMP | | 8 | | | | | |
| 02 | 9384-1310-91 | WIRING SADDLE 18.5H | | 35 | | | | | |
| 03 | 9384-1310-81 | WIRING SADDLE 6.4H | | 72 | | | | | |
| 04 | 9384-1311-01 | WIRING SADDLE 27H | | 137 | | | | | |
| 05 | 9384-1311-21 | WIRING SADDLE 16.8H | | 6 | | | | | |
| 06 | 9384-1621-21 | PWB SUPPORT 6.4H | | 8 | | | | | |
| 07 | 9384-1820-61 | LEAD CLAMPER | | 3 | | | | | |
| 08 | 9384-1900-55 | PWB SUPPORT 9.53H | | 40 | | | | | |
| 09 | 9384-1900-57 | PWB SUPPORT 9.53H | | 32 | | | | | |
| 10 | 9384-2010-21 | EDGE COVER 8.5H | | 40 | | | | | |
| 11 | 9384-2010-31 | EDGE COVER 15.4H | | 16 | | | | | |
| 12 | 9384-2800-36 | EDGE COVER 15.0H | | 3 | | | | | |

| INDEX | PART NO. | PART NAME | REC | QTY | SFIX |
|---|---|---|---|---|---|
| | | | | | |

| INDEX | PART NO. | PART NAME | ILLUST |
|---|---|---|---|
| 0502<br>0510 | 9752-3012-50<br>9752-3014-50 | PIN |  |
| 1111 | 9642-0306-13 | SCREW |  |
| 1277 | 9644-2606-13 | SCREW |  |
| 1305<br>1308<br>1318 | 9646-0306-13<br>9646-0308-13<br>9646-0408-13 | SCREW |  |
| 3305<br>3335 | 9732-0308-13<br>9732-0206-13 | TAPPING SCREW |  |
| 3403 | 9733-0308-13 | TAPPING SCREW |  |
| 3501<br>3504<br>3508<br>3538<br>3542<br>3545 | 9735-0306-13<br>9735-0308-13<br>9735-0408-13<br>9735-0408-14<br>9735-0320-13<br>9735-0410-14 | TAPPING SCREW |  |
| 3701<br>3704 | 9739-0408-13<br>9739-0308-13 | TAPPING SCREW |  |
| 4005<br>4011<br>4012<br>4020<br>4024 | 9743-0408-13<br>9743-0308-13<br>9743-0306-13<br>9743-0408-14<br>9743-0410-14 | TAPPING SCREW |  |
| 8501 | 9716-0300-01 | WASHER |  |

| INDEX | PART NO. | PART NAME | ILLUST |
|---|---|---|---|
| 9107 | 9721-0400-01 | RETAINING RING |  |
| 9301<br>9302<br>9303 | 1066-1151-01<br>4425-3001-01<br>4425-3002-01 | RETAINING RING |  |

| INDEX | PART NO. | PART NAME | ILLUST |
|---|---|---|---|

| PART NO. | FIG. | INDEX | QTY | | PART NO. | FIG. | INDEX | QTY | | PART NO. | FIG. | INDEX | QTY | | PART NO. | FIG. | INDEX | QTY | |
|---|---|---|---|---|---|---|---|---|---|---|---|---|---|---|---|---|---|---|---|
| 0966-3906-01 | 03 | 18 | 1 | | 4002-3121-02 | 03 | 36 | 1 | | 4425-3032-01 | 04 | 13 | 2 | | 4425-3957-01 | 02 | 29 | 1 | |
| 1033-4402-01 | 04 | 28 | 2 | | 4002-3121-02 | 06 | 15 | 2 | | 4425-3032-01 | 07 | 06 | 1 | | 4425-7312-01 | 11 | 06 | 1 | |
| 1052-5409-01 | 09 | 01 | 1 | | 4002-3121-02 | 11 | 05 | 1 | | 4425-3032-01 | 07 | 06 | 2 | | 4425-7341-01 | 10 | 04 | 1 | |
| 1065-5872-01 | 12 | 01 | 8 | | 4002-3123-01 | 01 | 01 | 1 | | 4425-3103-12 | 01 | 27 | 4 | | 4425-7343-01 | 10 | 01 | 1 | |
| 1067-5508-01 | 02 | 23 | 2 | | 4002-3123-01 | 06 | 08 | 2 | | 4425-3103-12 | 01 | 41 | 4 | | 4425-7344-01 | 10 | 01 | 1 | |
| 1074-3753-01 | 10 | 13 | 1 | | 4002-3125-01 | 06 | 07 | 2 | | 4425-3103-12 | 03 | 30 | 12 | | 4444-2010-01 | 01 | 15 | 4 | |
| 1075-3572-01 | 02 | 15 | 1 | | 4002-3130-02 | 06 | 03 | 2 | | 4425-3115-01 | 05 | 27 | 1 | | 4444-2014-01 | 01 | 14 | 2 | |
| 1075-3576-02 | 02 | 14 | 1 | | 4002-3136-02 | 06 | 06 | 2 | | 4425-3115-01 | 08 | 16 | 1 | | 4444-3116-02 | 01 | 26 | 1 | |
| 1075-3708-13 | 09 | 03 | 4 | | 4002-3201-01 | 05 | 19 | 2 | | 4425-3130-01 | 05 | 03 | 2 | | 4444-3741-01 | 10 | 33 | 1 | |
| 1075-3709-01 | 09 | 02 | 4 | | 4002-3201-01 | 08 | 21 | 1 | | 4425-3130-01 | 08 | 03 | 1 | | 4444-3743-01 | 10 | 32 | 1 | |
| 1075-3755-01 | 09 | 05 | 2 | | 4002-3203-01 | 05 | 23 | 2 | | 4425-3130-01 | 08 | 03 | 2 | | 4444-3744-01 | 10 | 02 | 1 | |
| 1075-3762-01 | 09 | 09 | 1 | | 4002-3203-01 | 08 | 24 | 1 | | 4425-3138-02 | 04 | 03 | 1 | | 4450-3822-01 | 03 | 03 | 2 | |
| 1075-3769-01 | 09 | 42 | 1 | | 4002-3205-01 | 05 | 25 | 2 | | 4425-3138-02 | 07 | 03 | 1 | | 4479-0105-01 | 09 | 15 | 1 | |
| 1100-1321-08 | 01 | 06 | 2 | | 4002-3205-01 | 08 | 26 | 1 | | 4425-3139-01 | 04 | 29 | 1 | | 4479-3702-02 | 10 | 05 | 2 | |
| 1100-1332-05 | 10 | 14 | 1 | | 4002-3206-03 | 05 | 26 | 2 | | 4425-3139-01 | 07 | 15 | 1 | | 4479-3703-02 | 10 | 05 | 2 | |
| 1100-1332-14 | 03 | 08 | 1 | | 4002-3206-03 | 08 | 27 | 1 | | 4425-3203-05 | 06 | 14 | 2 | | 4479-3708-01 | 10 | 17 | 1 | |
| 1100-1335-03 | 01 | 09 | 2 | | 4002-3208-01 | 05 | 15 | 2 | | 4425-3204-13 | 04 | 16 | 2 | | 4479-3709-01 | 10 | 20 | 1 | |
| 1100-1340-10 | 10 | 10 | 2 | | 4002-3208-01 | 08 | 15 | 1 | | 4425-3205-01 | 04 | 23 | 2 | | 4479-3710-02 | 10 | 18 | 1 | |
| 1100-1944-02 | 10 | 19 | 1 | | 4002-3209-01 | 05 | 24 | 2 | | 4425-3206-01 | 04 | 22 | 2 | | 4479-3713-01 | 09 | 26 | 1 | |
| 1134-3169-02 | 05 | 16 | 1 | | 4002-3209-01 | 08 | 25 | 1 | | 4425-3207-01 | 04 | 24 | 2 | | 4479-3714-01 | 09 | 22 | 1 | |
| 1134-3169-02 | 08 | 18 | 1 | | 4002-3211-01 | 05 | 12 | 2 | | 4425-3208-01 | 04 | 20 | 2 | | 4479-3717-01 | 09 | 24 | 1 | |
| 1136-4510-01 | 01 | 33 | 1 | | 4002-3211-01 | 08 | 11 | 1 | | 4425-3212-01 | 04 | 21 | 2 | | 4479-3718-01 | 09 | 25 | 1 | |
| 1139-3153-01 | 03 | 27 | 2 | | 4002-3212-01 | 05 | 11 | 2 | | 4425-3213-01 | 06 | 13 | 2 | | 4479-3741-02 | 09 | 34 | 1 | |
| 1139-3153-01 | 06 | 11 | 4 | | 4002-3212-01 | 08 | 12 | 1 | | 4425-3216-02 | 06 | 10 | 2 | | 4479-3745-01 | 09 | 36 | 1 | |
| 1149-3454-01 | 01 | 24 | 1 | | 4002-3213-01 | 05 | 14 | 2 | | 4425-3217-01 | 06 | 09 | 2 | | 4479-3746-01 | 09 | 35 | 1 | |
| 1149-3454-01 | 02 | 11 | 1 | | 4002-3213-01 | 08 | 14 | 1 | | 4425-3224-13 | 04 | 25 | 2 | | 4479-3748-02 | 09 | 38 | 1 | |
| 1151-3300-01 | 10 | 11 | 4 | | 4002-3214-02 | 05 | 20 | 2 | | 4425-3225-02 | 04 | 17 | 2 | | 4479-3804-01 | 11 | 03 | 1 | |
| 1151-3300-01 | 11 | 02 | 4 | | 4002-3214-02 | 08 | 20 | 1 | | 4425-3227-02 | 04 | 19 | 2 | | 4479-7303-01 | 10 | 28 | 1 | |
| 1151-7371-01 | 06 | 16 | 1 | | 4002-3216-01 | 05 | 22 | 2 | | 4425-3234-02 | 05 | 18 | 1 | | 4479-7318-01 | 03 | 37 | 1 | |
| 1151-7372-01 | 06 | 16 | 1 | | 4002-3216-01 | 08 | 23 | 1 | | 4425-3234-02 | 08 | 19 | 1 | | 4479-7319-01 | 03 | 37 | 1 | |
| 1155-3816-01 | 02 | 03 | 2 | | 4002-3217-01 | 05 | 21 | 2 | | 4425-3241-03 | 04 | 27 | 2 | | 4479-7320-01 | 03 | 37 | 1 | |
| 1155-3822-03 | 02 | 04 | 2 | | 4002-3217-01 | 08 | 22 | 1 | | 4425-3242-02 | 04 | 26 | 2 | | 4479-7330-01 | 10 | 06 | 1 | |
| 1155-3845-01 | 02 | 21 | 1 | | 4002-3304-01 | 04 | 04 | 2 | | 4425-3247-01 | 01 | 20 | 1 | | 4479-7331-02 | 10 | 30 | 1 | |
| 1155-3853-01 | 02 | 05 | 1 | | 4002-3304-01 | 07 | 04 | 1 | | 4425-3249-02 | 11 | 09 | 1 | | 4640-0101-03 | 01 | 46 | 1 | |
| 1155-3911-01 | 03 | 29 | 6 | | 4002-3306-01 | 05 | 10 | 2 | | 4425-3257-01 | 06 | 02 | 2 | | 4640-0102-03 | 01 | 46 | 1 | |
| 1159-1938-01 | 05 | 05 | 4 | | 4002-3306-01 | 08 | 06 | 1 | | 4425-3372-01 | 03 | 20 | 1 | | 4640-0103-03 | 01 | 46 | 1 | |
| 1159-1938-01 | 08 | 10 | 2 | | 4002-3306-01 | 08 | 06 | 2 | | 4425-3626-01 | 04 | 14 | 2 | | 4640-0151-02 | 01 | 05 | 1 | |
| 1161-3710-01 | 10 | 18 | 1 | | 4002-3318-01 | 01 | 42 | 1 | | 4425-3626-01 | 07 | 05 | 1 | | 4640-0203-02 | 02 | 12 | 1 | |
| 1200-1531-01 | 03 | 32 | 1 | | 4002-3318-01 | 01 | 43 | 1 | | 4425-3626-01 | 07 | 05 | 2 | | 4640-0902-01 | 01 | 34 | 1 | |
| 1200-1536-01 | 01 | 07 | 2 | | 4002-3321-01 | 04 | 05 | 2 | | 4425-3702-04 | 10 | 29 | 1 | | 4640-0902-01 | 02 | 16 | 3 | |
| 1200-1541-04 | 09 | 16 | 1 | | 4002-3321-01 | 07 | 13 | 1 | | 4425-3710-01 | 10 | 09 | 2 | | 4640-0902-01 | 04 | 09 | 2 | |
| 1200-1566-04 | 02 | 20 | 1 | | 4002-3323-01 | 05 | 06 | 2 | | 4425-3714-01 | 09 | 27 | 2 | | 4640-0902-01 | 07 | 10 | 1 | |
| 1200-1566-07 | 09 | 37 | 1 | | 4002-3323-01 | 08 | 09 | 1 | | 4425-3715-01 | 09 | 04 | 4 | | 4640-0902-01 | 07 | 16 | 1 | |
| 1200-1866-01 | 03 | 17 | 4 | | 4002-3326-01 | 05 | 04 | 2 | | 4425-3723-01 | 09 | 20 | 2 | | 4640-0903-01 | 03 | 35 | 3 | |
| 1200-2105-02 | 02 | 35 | 1 | | 4002-3326-01 | 08 | 04 | 1 | | 4425-3723-01 | 09 | 31 | 1 | | 4640-0903-01 | 04 | 07 | 5 | |
| 1200-2105-06 | 01 | 37 | 1 | | 4002-3326-01 | 08 | 04 | 2 | | 4425-3726-01 | 09 | 30 | 2 | | 4640-0903-01 | 05 | 13 | 4 | |
| 1200-2105-06 | 02 | 13 | 2 | | 4002-3330-01 | 04 | 06 | 2 | | 4425-3729-02 | 09 | 33 | 2 | | 4640-0903-01 | 07 | 12 | 1 | |
| 1200-2105-06 | 03 | 12 | 4 | | 4002-3330-01 | 07 | 14 | 1 | | 4425-3732-03 | 10 | 03 | 1 | | 4640-0903-01 | 07 | 17 | 1 | |
| 1200-2105-06 | 04 | 08 | 4 | | 4002-3331-01 | 01 | 23 | 2 | | 4425-3740-01 | 10 | 08 | 4 | | 4640-0903-01 | 08 | 13 | 2 | |
| 1200-2105-06 | 07 | 07 | 1 | | 4002-3331-01 | 01 | 40 | 2 | | 4425-3742-02 | 03 | 06 | 1 | | 4640-0903-01 | 09 | 07 | 5 | |
| 1200-2105-06 | 07 | 07 | 3 | | 4002-3339-01 | 05 | 02 | 2 | | 4425-3742-02 | 09 | 18 | 1 | | 4640-0903-01 | 10 | 12 | 4 | |
| 1200-2105-06 | 09 | 23 | 1 | | 4002-3339-01 | 08 | 02 | 1 | | 4425-3743-02 | 09 | 29 | 1 | | 4640-1005-03 | 01 | 02 | 1 | |
| 1200-2105-06 | 10 | 31 | 1 | | 4002-3339-01 | 08 | 02 | 2 | | 4425-3745-01 | 09 | 13 | 1 | | 4640-1101-03 | 10 | 27 | 1 | |
| 1200-2346-09 | 10 | 16 | 1 | | 4002-3344-01 | 04 | 01 | 4 | | 4425-3747-01 | 09 | 17 | 1 | | 4640-1101-03 | 11 | 08 | 1 | |
| 1200-3120-03 | 09 | 21 | 2 | | 4002-3344-01 | 07 | 01 | 2 | | 4425-3750-01 | 01 | 45 | 1 | | 4640-1102-01 | 10 | 23 | 1 | |
| 1200-3134-16 | 02 | 22 | 4 | | 4002-3703-01 | 02 | 07 | 2 | | 4425-3754-01 | 09 | 32 | 1 | | 4640-1103-01 | 01 | 19 | 1 | |
| 1200-3134-16 | 03 | 19 | 6 | | 4002-3704-01 | 02 | 02 | 6 | | 4425-3755-03 | 09 | 39 | 1 | | 4640-1106-03 | 01 | 35 | 1 | |
| 1200-3134-16 | 05 | 17 | 2 | | 4002-3705-01 | 02 | 06 | 6 | | 4425-3756-01 | 10 | 21 | 4 | | 4640-1107-01 | 01 | 11 | 1 | |
| 1200-3134-16 | 06 | 12 | 4 | | 4002-7306-01 | 06 | 04 | 2 | | 4425-3758-02 | 09 | 11 | 1 | | 4640-1108-02 | 01 | 28 | 1 | |
| 1200-3134-16 | 08 | 17 | 1 | | 4002-7318-01 | 01 | 47 | 1 | | 4425-3761-01 | 09 | 10 | 1 | | 4640-1109-03 | 03 | 34 | 1 | |
| 1200-3134-16 | 08 | 17 | 2 | | 4425-0104-02 | 09 | 43 | 1 | | 4425-3766-13 | 09 | 12 | 1 | | 4640-1111-01 | 01 | 18 | 1 | |
| 1200-3134-16 | 09 | 28 | 4 | | 4425-0152-02 | 04 | 12 | 2 | | 4425-3770-01 | 09 | 06 | 4 | | 4640-1113-02 | 01 | 04 | 1 | |
| 1273-3003-01 | 10 | 07 | 4 | | 4425-0152-02 | 07 | 08 | 1 | | 4425-3772-01 | 10 | 15 | 1 | | 4640-2021-01 | 01 | 36 | 1 | |
| 1273-3516-01 | 05 | 01 | 2 | | 4425-0753-01 | 09 | 41 | 1 | | 4425-3799-01 | 09 | 40 | 1 | | 4640-2024-01 | 01 | 31 | 1 | |
| 1273-3516-01 | 08 | 01 | 1 | | 4425-1059-12 | 01 | 10 | 2 | | 4425-3840-01 | 03 | 02 | 4 | | 4640-2026-01 | 01 | 30 | 2 | |
| 1273-3516-01 | 08 | 01 | 2 | | 4425-2064-02 | 11 | 01 | 1 | | 4425-3842-01 | 03 | 04 | 4 | | 4640-2031-01 | 01 | 03 | 1 | |
| 1400-1134-02 | 01 | 08 | 2 | | 4425-3021-02 | 04 | 11 | 2 | | 4425-3935-01 | 02 | 37 | 1 | | 4640-3108-01 | 10 | 22 | 2 | |
| 4002-0751-01 | 04 | 18 | 2 | | 4425-3021-02 | 07 | 09 | 1 | | 4425-3935-01 | 03 | 22 | 3 | | 4640-3108-01 | 11 | 04 | 2 | |
| 4002-0751-01 | 09 | 19 | 2 | | 4425-3024-01 | 04 | 10 | 2 | | 4425-3954-12 | 02 | 32 | 1 | | 4640-3109-03 | 11 | 07 | 1 | |
| 4002-3119-01 | 06 | 01 | 2 | | 4425-3024-01 | 07 | 11 | 1 | | 4425-3955-01 | 02 | 31 | 1 | | 4640-3304-02 | 04 | 02 | 1 | |

| PART NO. | FIG. | INDEX | QTY | | PART NO. | FIG. | INDEX | QTY | | PART NO. | FIG. | INDEX | QTY | | PART NO. | FIG. | INDEX | QTY | |
|---|---|---|---|---|---|---|---|---|---|---|---|---|---|---|---|---|---|---|---|
| 4640-3304-02 | 07 | 02 | 1 | | 9384-1900-57 | 12 | 09 | 32 | | | | | | | | | | | |
| 4640-3307-03 | 01 | 25 | 1 | | 9384-2010-21 | 12 | 10 | 40 | | | | | | | | | | | |
| 4640-3312-01 | 01 | 21 | 1 | | 9384-2010-31 | 12 | 11 | 16 | | | | | | | | | | | |
| 4640-3315-01 | 01 | 22 | 2 | | 9384-2800-36 | 12 | 12 | 3 | | | | | | | | | | | |
| 4640-3315-01 | 01 | 39 | 2 | | | | | | | | | | | | | | | | |
| 4640-3316-12 | 05 | 07 | 2 | | | | | | | | | | | | | | | | |
| 4640-3316-12 | 08 | 05 | 1 | | | | | | | | | | | | | | | | |
| 4640-3316-12 | 08 | 05 | 2 | | | | | | | | | | | | | | | | |
| 4640-3710-01 | 09 | 14 | 1 | | | | | | | | | | | | | | | | |
| 4640-3807-01 | 02 | 26 | 1 | | | | | | | | | | | | | | | | |
| 4640-3808-01 | 02 | 01 | 1 | | | | | | | | | | | | | | | | |
| 4640-3809-01 | 02 | 28 | 1 | | | | | | | | | | | | | | | | |
| 4640-3811-01 | 02 | 24 | 2 | | | | | | | | | | | | | | | | |
| 4640-3814-02 | 02 | 18 | 2 | | | | | | | | | | | | | | | | |
| 4640-3816-01 | 02 | 10 | 1 | | | | | | | | | | | | | | | | |
| 4640-3819-01 | 02 | 08 | 1 | | | | | | | | | | | | | | | | |
| 4640-3822-01 | 02 | 09 | 1 | | | | | | | | | | | | | | | | |
| 4640-3825-01 | 02 | 34 | 1 | | | | | | | | | | | | | | | | |
| 4640-3826-01 | 02 | 19 | 1 | | | | | | | | | | | | | | | | |
| 4640-3827-01 | 02 | 30 | 1 | | | | | | | | | | | | | | | | |
| 4640-3831-01 | 02 | 27 | 1 | | | | | | | | | | | | | | | | |
| 4640-3832-01 | 02 | 17 | 1 | | | | | | | | | | | | | | | | |
| 4640-3833-01 | 01 | 12 | 1 | | | | | | | | | | | | | | | | |
| 4640-3834-01 | 01 | 16 | 1 | | | | | | | | | | | | | | | | |
| 4640-3835-01 | 01 | 13 | 1 | | | | | | | | | | | | | | | | |
| 4640-3836-01 | 01 | 38 | 1 | | | | | | | | | | | | | | | | |
| 4640-3904-01 | 03 | 28 | 1 | | | | | | | | | | | | | | | | |
| 4640-3908-02 | 03 | 01 | 1 | | | | | | | | | | | | | | | | |
| 4640-3909-01 | 03 | 26 | 1 | | | | | | | | | | | | | | | | |
| 4640-3910-01 | 03 | 23 | 3 | | | | | | | | | | | | | | | | |
| 4640-3915-01 | 03 | 13 | 1 | | | | | | | | | | | | | | | | |
| 4640-3917-01 | 03 | 14 | 1 | | | | | | | | | | | | | | | | |
| 4640-3919-01 | 03 | 25 | 1 | | | | | | | | | | | | | | | | |
| 4640-3920-01 | 03 | 11 | 1 | | | | | | | | | | | | | | | | |
| 4640-3921-01 | 03 | 10 | 1 | | | | | | | | | | | | | | | | |
| 4640-3924-01 | 03 | 07 | 1 | | | | | | | | | | | | | | | | |
| 4640-3925-01 | 01 | 29 | 3 | | | | | | | | | | | | | | | | |
| 4640-3928-01 | 02 | 36 | 1 | | | | | | | | | | | | | | | | |
| 4640-3928-01 | 03 | 21 | 3 | | | | | | | | | | | | | | | | |
| 4640-3934-01 | 03 | 16 | 4 | | | | | | | | | | | | | | | | |
| 4640-3935-01 | 03 | 05 | 1 | | | | | | | | | | | | | | | | |
| 4640-3936-01 | 03 | 09 | 1 | | | | | | | | | | | | | | | | |
| 4640-3938-01 | 03 | 15 | 1 | | | | | | | | | | | | | | | | |
| 4640-6002-01 | 10 | 26 | 1 | | | | | | | | | | | | | | | | |
| 4640-6201-01 | 01 | 48 | 1 | | | | | | | | | | | | | | | | |
| 4640-7301-01 | 10 | 25 | 1 | | | | | | | | | | | | | | | | |
| 4640-7303-01 | 10 | 24 | 1 | | | | | | | | | | | | | | | | |
| 4640-7304-01 | 10 | 24 | 1 | | | | | | | | | | | | | | | | |
| 4640-7305-01 | 03 | 31 | 1 | | | | | | | | | | | | | | | | |
| 4640-7306-01 | 03 | 33 | 1 | | | | | | | | | | | | | | | | |
| 4640-7307-01 | 06 | 05 | 2 | | | | | | | | | | | | | | | | |
| 4640-7308-01 | 01 | 17 | 1 | | | | | | | | | | | | | | | | |
| 9313-1000-21 | 01 | 32 | 1 | | | | | | | | | | | | | | | | |
| 9314-1000-41 | 05 | 08 | 1 | | | | | | | | | | | | | | | | |
| 9314-1000-41 | 08 | 07 | 1 | | | | | | | | | | | | | | | | |
| 9314-1000-72 | 05 | 09 | 2 | | | | | | | | | | | | | | | | |
| 9314-1000-72 | 08 | 08 | 1 | | | | | | | | | | | | | | | | |
| 9314-1911-11 | 02 | 25 | 1 | | | | | | | | | | | | | | | | |
| 9314-2911-02 | 03 | 24 | 1 | | | | | | | | | | | | | | | | |
| 9321-2620-41 | 09 | 08 | 1 | | | | | | | | | | | | | | | | |
| 9321-2910-81 | 02 | 33 | 1 | | | | | | | | | | | | | | | | |
| 9335-1310-41 | 04 | 15 | 2 | | | | | | | | | | | | | | | | |
| 9352-6310-11 | 01 | 44 | 1 | | | | | | | | | | | | | | | | |
| 9384-1310-81 | 12 | 03 | 72 | | | | | | | | | | | | | | | | |
| 9384-1310-91 | 12 | 02 | 35 | | | | | | | | | | | | | | | | |
| 9384-1311-01 | 12 | 04 | 137 | | | | | | | | | | | | | | | | |
| 9384-1311-21 | 12 | 05 | 6 | | | | | | | | | | | | | | | | |
| 9384-1621-21 | 12 | 06 | 8 | | | | | | | | | | | | | | | | |
| 9384-1820-61 | 12 | 07 | 3 | | | | | | | | | | | | | | | | |
| 9384-1900-55 | 12 | 08 | 40 | | | | | | | | | | | | | | | | |




*Copyright*
*2000 MINOLTA Co., Ltd.*
*Printed in Japan*

4640-7995-21 00082830