FUSING SECTION

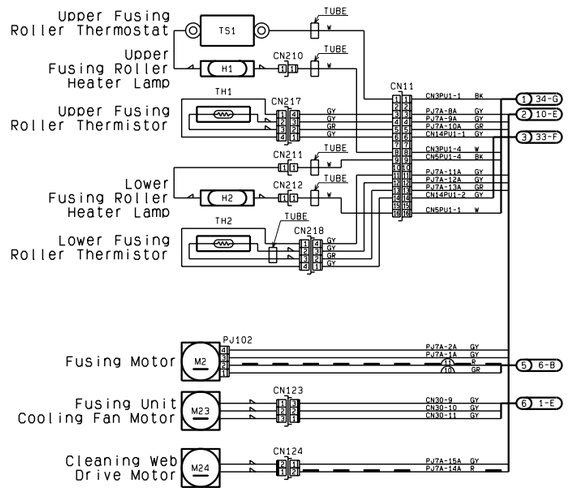

PAPER EXIT SECTION

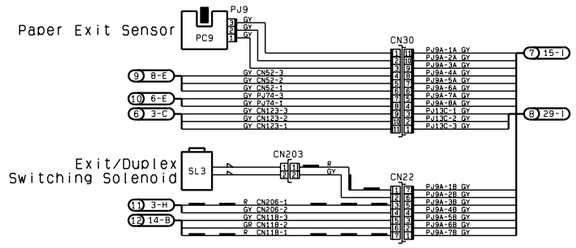

DUPLEX SECTION

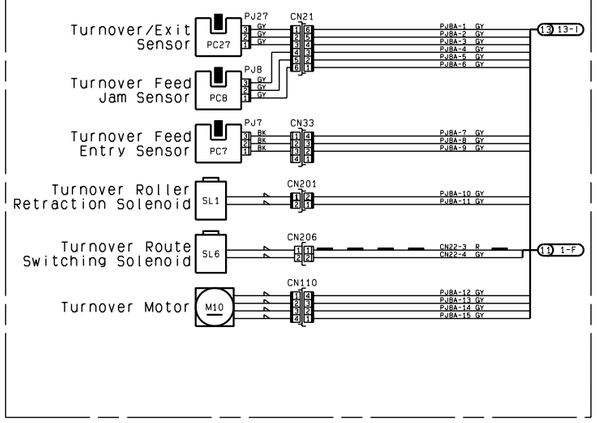

DEVELOPING SECTION

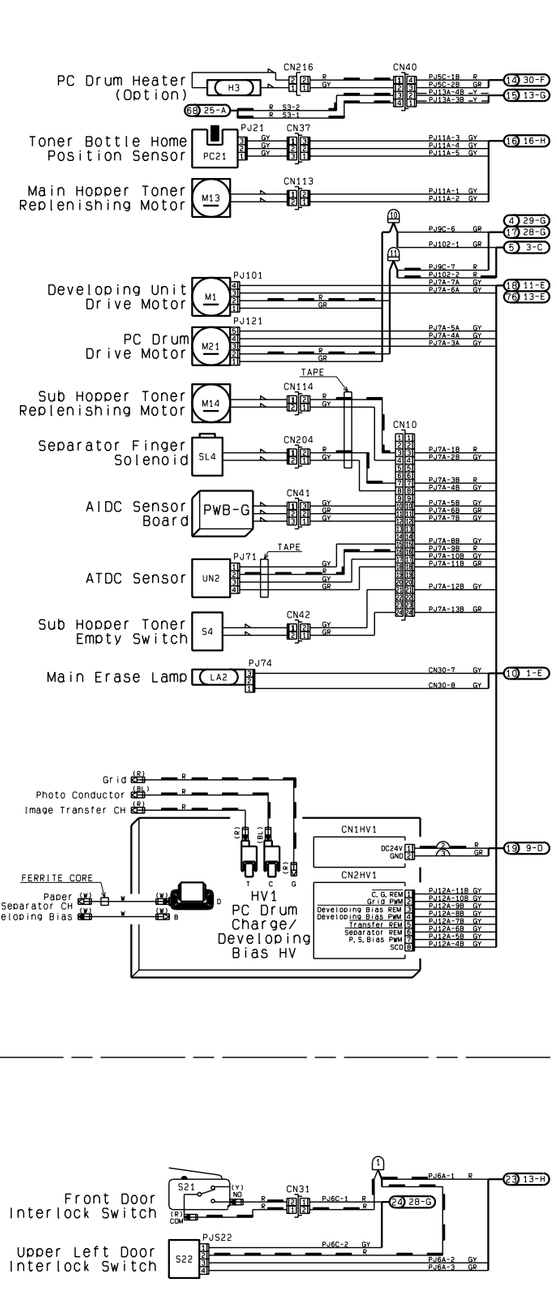

TRANSPORT SECTION

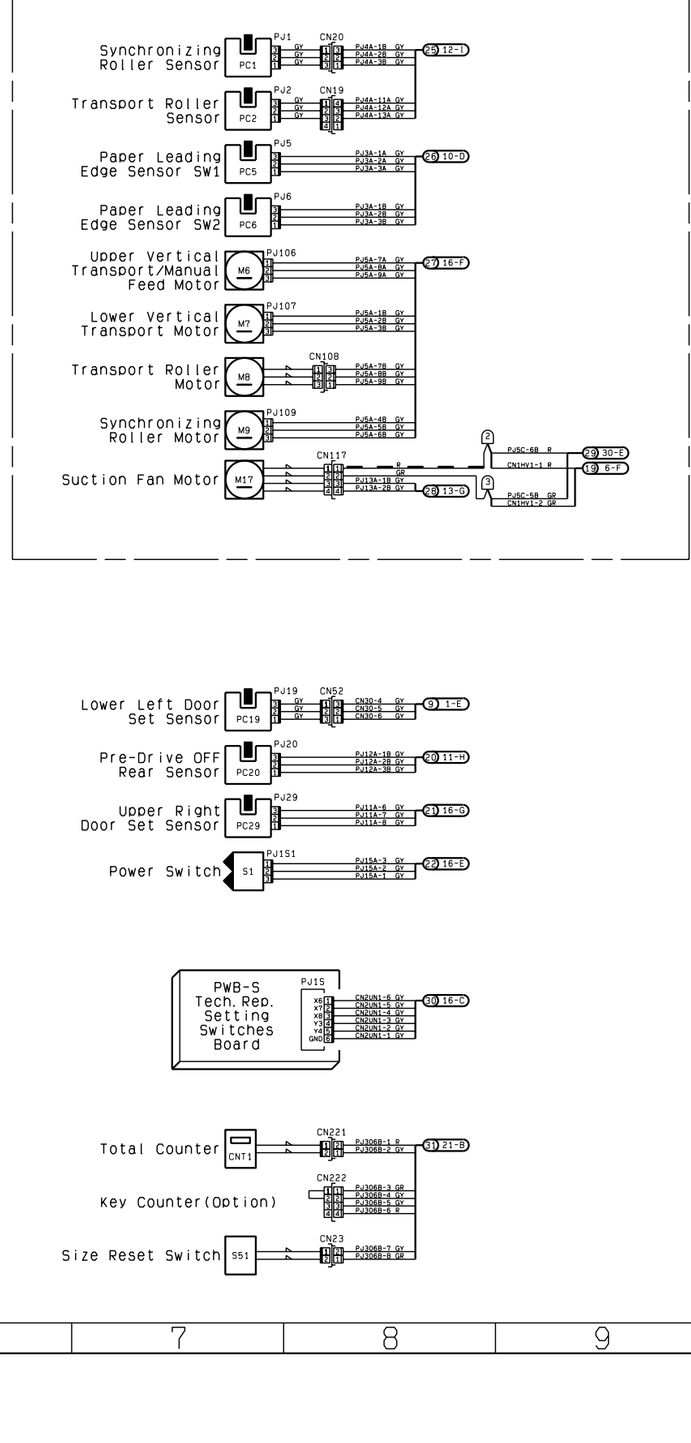

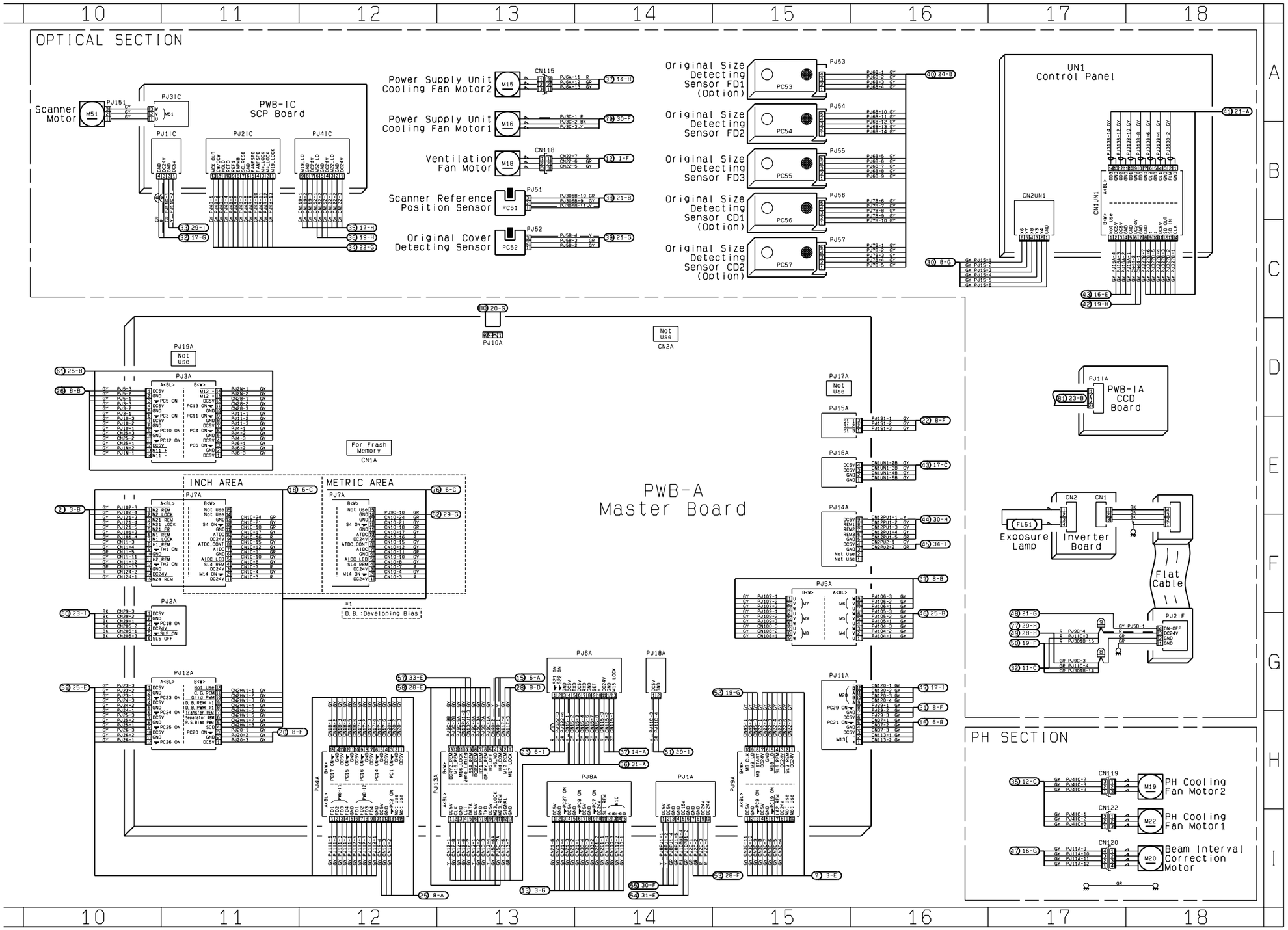

OPTICAL SECTION
Scanner Motor
PWB-IC SCP Board
Power Supply Unit Cooling Fan Motor2
Power Supply Unit Cooling Fan Motor1
Ventilation Fan Motor
Scanner Reference Position Sensor
Original Cover Detecting Sensor
Original Size Detecting Sensor FD1 (Option)
Original Size Detecting Sensor FD2
Original Size Detecting Sensor FD3
Original Size Detecting Sensor CD1 (Option)
Original Size Detecting Sensor CD2 (Option)
UN1 Control Panel
PWB-IA CCD Board
PWB-A Master Board
INCH AREA
METRIC AREA
For Frash Memory
D.B.:Developing Bias
Exposure Lamp
Inverter Board
Flat Cable
PH SECTION
PH Cooling Fan Motor2
PH Cooling Fan Motor1
Beam Interval Correction Motor

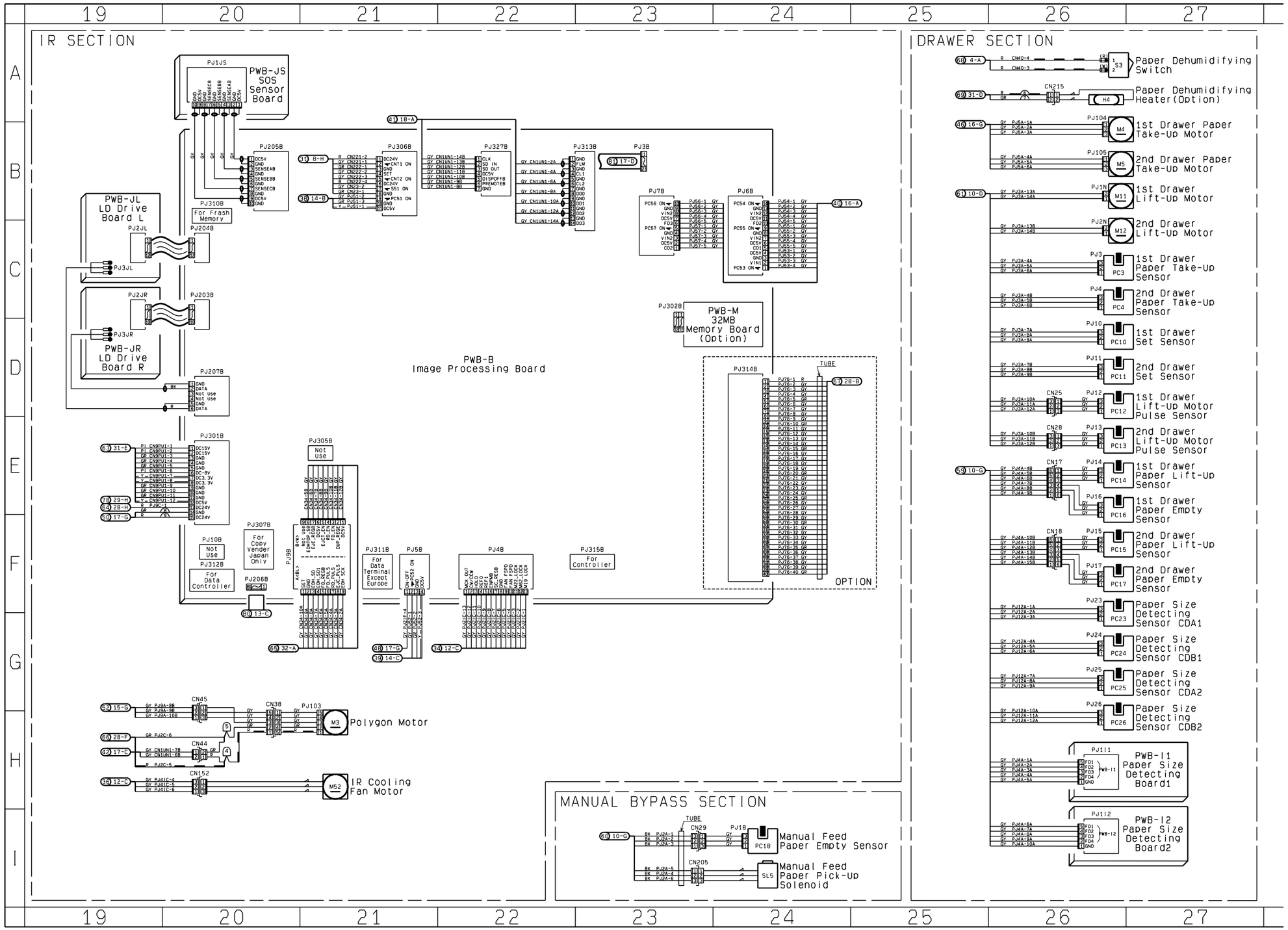
IR SECTION
PWB-JS SOS Sensor Board
PJ1JS
PJ205B
PJ306B
PJ327B
PJ313B
PJ3B
PJ7B
PJ6B
PWB-JL LD Drive Board L
PJ2JL
PJ204B
PJ3JL
PJ310B
For Frash Memory
PWB-JR LD Drive Board R
PJ2JR
PJ203B
PJ3JR
PJ207B
PJ301B
PJ305B
Not Use
PJ307B
For Copy Vender Japan Only
PJ10B
Not Use
PJ312B
For Data Controller
PJ206B
PJ98B
PJ311B
For Data Terminal except Europe
PJ5B
PJ4B
PJ315B
For Controller
PWB-B
Image Processing Board
PJ302B
PWB-M 32MB Memory Board (Option)
PJ314B
TUBE
OPTION
CN45
CN38
PJ103
M3
Polygon Motor
CN44
CN152
M52
IR Cooling Fan Motor
MANUAL BYPASS SECTION
TUBE
CN29
PJ18
PC18
Manual Feed Paper Empty Sensor
CN205
SL5
Manual Feed Paper Pick-Up Solenoid
DRAWER SECTION
S3
Paper Dehumidifying Switch
CN215
H4
Paper Dehumidifying Heater(Option)
PJ104
M4
1st Drawer Paper Take-Up Motor
PJ105
M5
2nd Drawer Paper Take-Up Motor
PJ1N
M11
1st Drawer Lift-Up Motor
PJ2N
M12
2nd Drawer Lift-Up Motor
PJ3
PC3
1st Drawer Paper Take-Up Sensor
PJ4
PC4
2nd Drawer Paper Take-Up Sensor
PJ10
PC10
1st Drawer Set Sensor
PJ11
PC11
2nd Drawer Set Sensor
CN25
PJ12
PC12
1st Drawer Lift-Up Motor Pulse Sensor
CN28
PJ13
PC13
2nd Drawer Lift-Up Motor Pulse Sensor
CN17
PJ14
PC14
1st Drawer Paper Lift-Up Sensor
PJ16
PC16
1st Drawer Paper Empty Sensor
CN18
PJ15
PC15
2nd Drawer Paper Lift-Up Sensor
PJ17
PC17
2nd Drawer Paper Empty Sensor
PJ23
PC23
Paper Size Detecting Sensor CDA1
PJ24
PC24
Paper Size Detecting Sensor CDB1
PJ25
PC25
Paper Size Detecting Sensor CDA2
PJ26
PC26
Paper Size Detecting Sensor CDB2
PJ111
PWB-I1
Paper Size Detecting Board1
PJ112
PWB-I2
Paper Size Detecting Board2

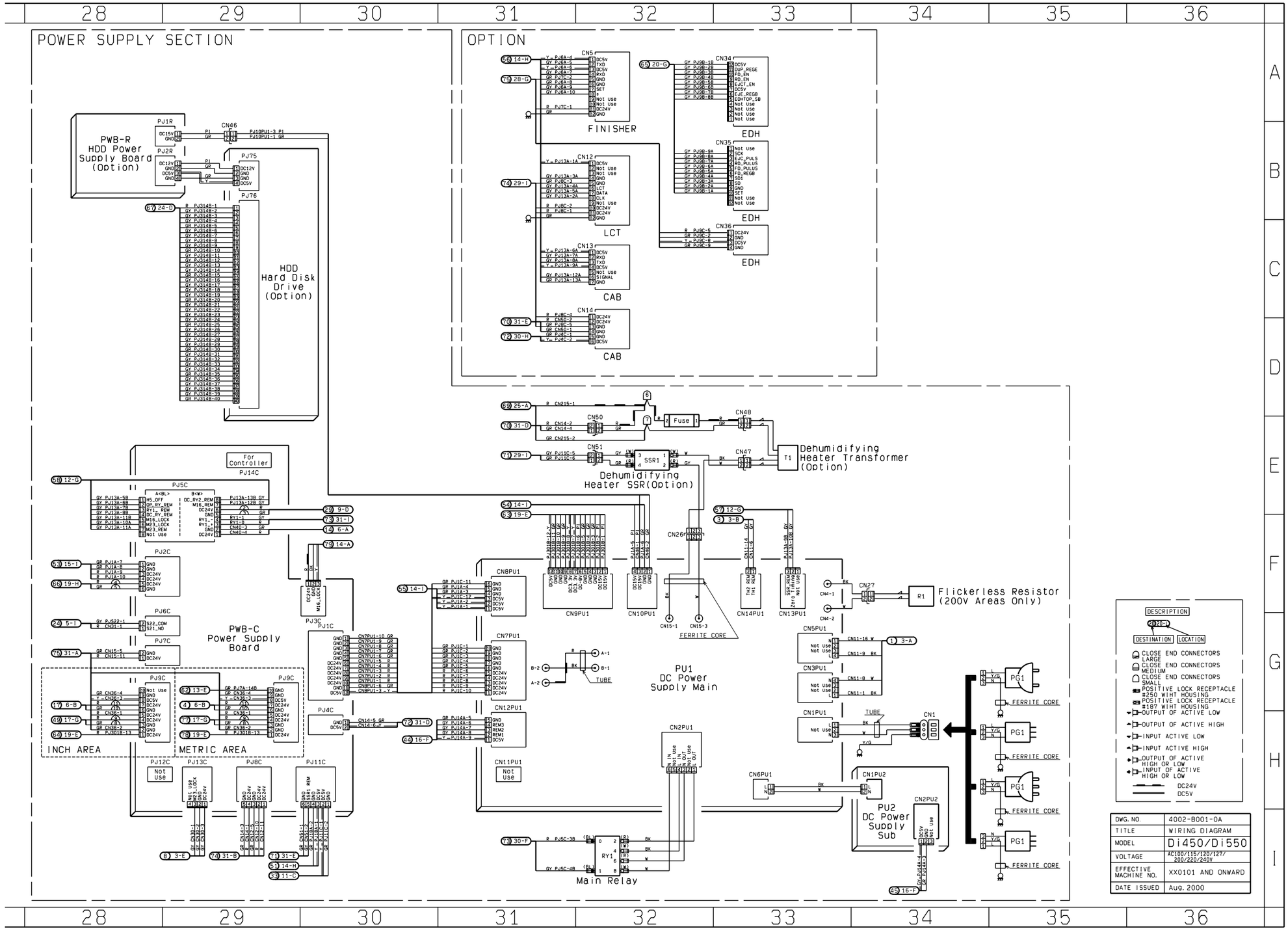

DWG. NO.	4002-B001-0A
TITLE	WIRING DIAGRAM
MODEL	Di450/Di550
VOLTAGE	AC100/115/120/127/ 200/220/240V
EFFECTIVE MACHINE NO.	XX0101 AND ONWARD
DATE ISSUED	Aug. 2000

ELECTRICAL PARTS LAYOUT

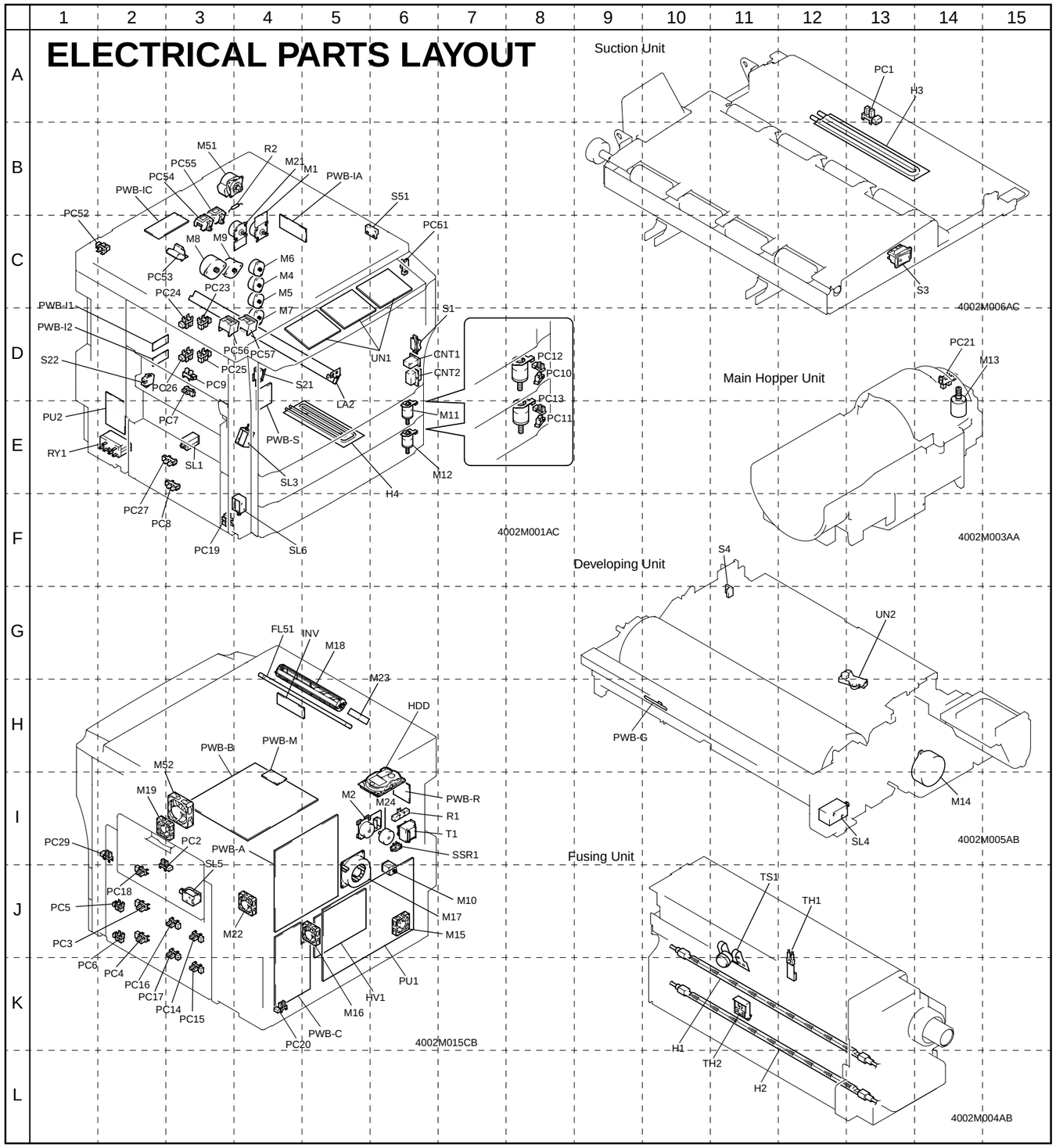

SYMBOL	PART NAME	LOCATION	GRID
CNT1	Total Counter	7-H	6-D
CNT2	Key Counter (OPTION)	—	6-D
FL51	Exposure Lamp	17-F	4~5-H
H1	Upper Fusing Roller Heater Lamp	2-A	10~13-J~L
H2	Lower Fusing Roller Heater Lamp	2-B	10~13-K~L
H3	PC Drum Heater (OPTION)	4~5-A	12~14-A~B
H4	Paper Dehumidifying Heater (OPTION)	26-A	4~5-E
HDD	Hard Disk Drive (OPTION)	29~30-B~E	5~6-I
HV1	PC Drum Charge/Developing Bias HV	4~5-F~G	5-J
INV	Inverter Board	17-E~F	4-H
LA2	Main Erase Lamp	4~5-E	3~5-C~D
M1	Developing Unit Drive Motor	4~5-C	4-C
M2	Fusing Motor	2-C	5~6-I
M3	Polygon Motor	21-H	—
M4	1st Drawer Paper Take-Up Motor	26-A~B	4-C
M5	2nd Drawer Paper Take-Up Motor	26-B	4-C
M6	Upper Vertical Transport/Manual Feed Motor	7-B~C	4-C
M7	Lower Vertical Transport Motor	7-C	4-D
M8	Transport Roller Motor	7-C	3-C
M9	Synchronizing Roller Motor	7-D	3~4-C
M10	Turnover Motor	2-I	6-I~J
M11	1st Drawer Lift-Up Motor	26-B	6-E
M12	2nd Drawer Lift-Up Motor	26-C	6-E
M13	Main Hopper Toner Replenishing Motor	4~5-B	14-D~E
M14	Sub Hopper Toner Replenishing Motor	4~5-C~D	14-H~I
M15	Power Supply Unit Cooling Fan Motor 2	13-A	6-J
M16	Power Supply Unit Cooling Fan Motor 1	13-A~B	5-J
M17	Suction Fan Motor	7-D	5-I~J
M18	Ventilation Fan Motor	13-B	4~5-G~H
M19	PH Cooling Fan Motor 2	18-H	2~3-I
M20	Beam Interval Correction Motor	18-I	—
M21	PC Drum Drive Motor	4~5-C	3~4-C
M22	PH Cooling Fan Motor 1	18-I	4-J
M23	Fusing Unit Cooling Fan Motor	2-C~D	5-H
M24	Cleaning Web Drive Motor	2-D	6-I
M51	Scanner Motor	10-A~B	3~4-B
M52	IR Cooling Fan Motor	21-H	3-I
PC1	Synchronizing Roller Sensor	7-A	13-A
PC2	Transport Roller Sensor	7-A~B	2~3-I~J
PC3	1st Drawer Paper Take-Up Sensor	26-C	2-J
PC4	2nd Drawer Paper Take-Up Sensor	26-C	2-J
PC5	Paper Leading Edge Sensor SW1	7-B	2-J
PC6	Paper Leading Edge Sensor SW2	7-B	2-J
PC7	Turnover Feed Entry Sensor	1~2-H	3-D
PC8	Turnover Feed Jam Sensor	2-G	3-E
PC9	Paper Exit Sensor	2-E	3-D
PC10	1st Drawer Set Sensor	26-D	8-D
PC11	2nd Drawer Set Sensor	26-D	8-E
PC12	1st Drawer Lift-Up Motor Pulse Sensor	26-D	8-D
PC13	2nd Drawer Lift-Up Motor Pulse Sensor	26-E	8-E
PC14	1st Drawer Paper Lift-Up Sensor	26-E	3-J
PC15	2nd Drawer Paper Lift-Up Sensor	26-F	3-K
PC16	1st Drawer Paper Empty Sensor	26-E~F	3-J
PC17	2nd Drawer Paper Empty Sensor	26-F	3-J
PC18	Manual Feed Paper Empty Sensor	24-I	2-J
PC19	Lower Left Door Set Sensor	7-E~F	3-F
PC20	Pre-Drive OFF Rear Sensor	7-F	4-K

SYMBOL	PART NAME	LOCATION	GRID
PC21	Toner Bottle Home Position Sensor	4~5-B	14-D
PC23	Paper Size Detecting Sensor CDA1	26-F~G	3-D
PC24	Paper Size Detecting Sensor CDB1	26-G	3-D
PC25	Paper Size Detecting Sensor CDA2	26-G	3-D
PC26	Paper Size Detecting Sensor CDB2	26-H	3-D
PC27	Turnover/Exit Sensor	2-G	2~3-E
PC29	Upper Right Door Set Sensor	7-F	2-I
PC51	Scanner Reference Position Sensor	13-B	6-C
PC52	Original Cover Detecting Sensor	13-C	2-C
PC53	Original Size Detecting Sensor FD1 (✻1)	15-A	3-C
PC54	Original Size Detecting Sensor FD2	15-A~B	3-C
PC55	Original Size Detecting Sensor FD3 (✻2)	15-B	3-B~C
PC56	Original Size Detecting Sensor CD1	15-B~C	3~4-D
PC57	Original Size Detecting Sensor CD2 (✻2)	15-C	4-D
PU1	DC Power Supply Main	31~33-F~H	5~6-J~K
PU2	DC Power Supply Sub	34-H~I	2-D~E
PWB-A	Master Board	10~16-D~I	4~5-I~J
PWB-B	Image Processing Board	20~24-B~F	3~5-I
PWB-C	Power Supply Board	28~30-E~I	4~5-J~K
PWB-G	AIDC Sensor Board	4~5-D	10-H
PWB-I1	Paper Size Detecting Board 1	26~27-H	2-D
PWB-I2	Paper Size Detecting Board 2	26~27-I	2-D
PWB-IA	CCD Board	17~18-D~E	4-C
PWB-IC	SCP Board	10~12-A~B	2~3-C
PWB-JL	LD Drive Board L	19-B~C	—
PWB-JR	LD Drive Board R	20-C~D	—
PWB-JS	SOS Sensor Board	20-A	—
PWB-M	Memory Board (OPTION)	23~24-C~D	4-I
PWB-N	DC Motor Drive Board	—	—
PWB-R	HDD Power Supply Board (OPTION)	28~29-B	6-I
PWB-S	Tech. Rep. Setting Switches Board	7~8-G~H	4-D~E
R1	Flickerless Resistor (✻3)	34-F	6-I
R2	Drum Charge Resistor	—	3~4-B
RY1	Main Relay	32-I	2-E
S1	Power Switch	7-F~G	6-D
S3	Paper Dehumidifying Switch	26-A	13-C
S4	Sub Hopper Toner Empty Switch	4~5-E	11-G
S21	Front Door Interlock Switch	4~5-I	4-D
S22	Upper Left Door Interlock Switch	4-I	2-D
S51	Size Reset Switch	7-I	5~6-C
SL1	Turnover Roller Retraction Solenoid	1~2-H	3-E
SL3	Exit/Duplex Switching Solenoid	1~2-E~F	4-E
SL4	Separator Finger Solenoid	4~5-D	12-I
SL5	Manual Feed Paper Pick-Up Solenoid	24-I	3-J
SL6	Turnover Route Switching Solenoid	1~2-H	4-F
SSR1	Dehumidifying Heater SSR (OPTION)	32-E	6-I
T1	Dehumidifying Heater Transformer (OPTION)	33-E	6-I
TH1	Upper Fusing Roller Thermistor	2-B	12-J~K
TH2	Lower Fusing Roller Thermistor	2-B	11-K
TS1	Upper Fusing Roller Thermostat	2-A	11-J~K
UN1	Control Panel	17~18-A~C	4~6-C~D
UN2	ATDC Sensor	4~5-E	12~13-G~H

✻1: Optional for the U.S.A., Canada
✻2: Standard for the Other Areas (Except Korea, Taiwan)
✻3: 200V Areas Only

CONNECTORS LAYOUT

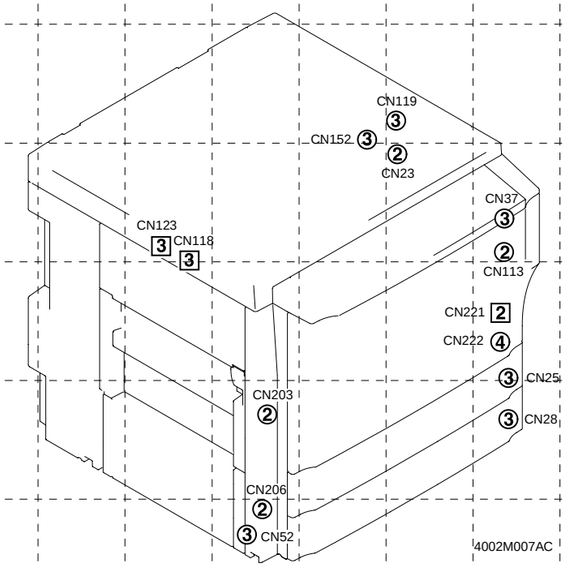

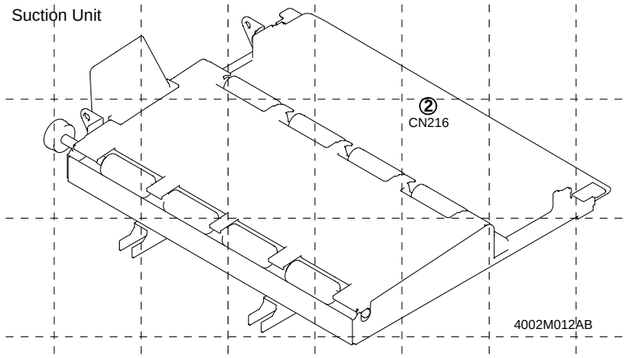

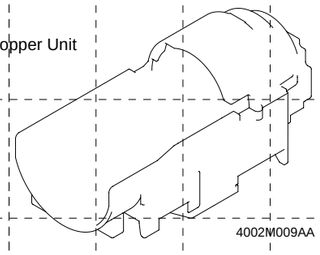

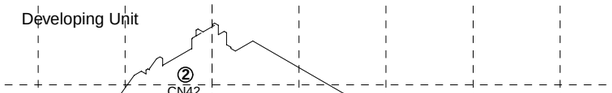

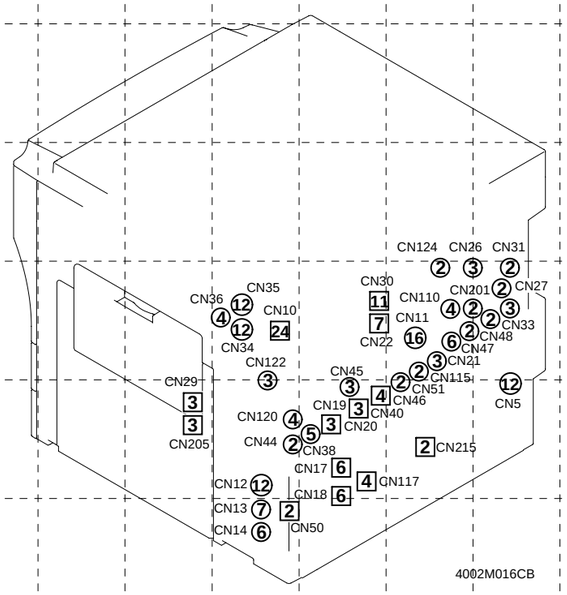

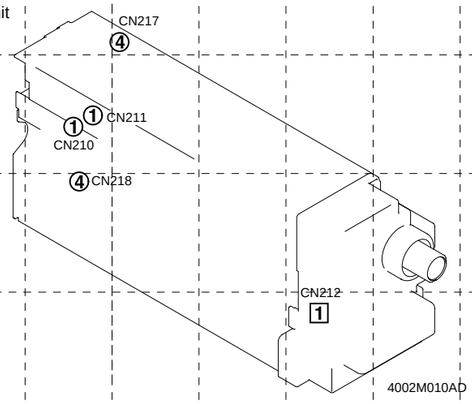

Description

Number of Pin
① Possible to confirm by removing external cover.
1 Not possible to confirm by removing external cover.

CN No.		LOCATION	GRID
CN5	12P	32-A	7-I~J
CN10	24P	5-D~E	4-I
CN11	16P	2~3-A~B	6-I
CN12	12P	32-B	4-J
CN13	7P	32-C	4-K
CN14	6P	32-D	4-K
CN17	6P	26-E	5-J
CN18	6P	26-F	5-J~K
CN19	4P	8-A~B	5-J
CN20	3P	8-A	5-J
CN21	6P	2-G	6-I
CN22	7P	2~3-F	5-I
CN23	2P	8-I	6-C
CN25	3P	26-D	7-D~E
CN26	3P	32-F	6~7-I
CN27	2P	34-F	7-I
CN28	3P	26-E	7-E
CN29	3P	23-I	3-J
CN30	11P	2~3-E	5-I
CN31	2P	5-I	7-I
CN33	4P	2-H	7-I
CN34	12P	33-A	4-I
CN35	12P	33-B	4-I
CN36	4P	33-C	4-I
CN37	3P	5-B	7-C
CN38	5P	20-H	5-J
CN40	4P	5-A	5-J
CN41	3P	5-D	9-G
CN42	2P	5-E	10-F
CN44	2P	20-H	4-J
CN45	3P	20-G~H	5-J
CN46	2P	29-B	5-J
CN47	2P	33-E	6-I
CN48	2P	33-E	6~7-I
CN50	2P	32-E	4-K
CN51	2P	32-E	6-I~J
CN52	3P	8-E~F	4-F
CN110	4P	2-I	6-I
CN113	2P	5-B	7-C
CN114	2P	5-C	13-H
CN115	3P	13-A	6-I
CN117	4P	8-D	5-J
CN118	3P	13-B	3-C~D
CN119	3P	17-H	6-B
CN120	4P	17-I	4-J
CN122	3P	17-I	4-I~J
CN123	3P	2-C~D	3-C
CN124	2P	2-D	6-I
CN152	3P	20-H	5-B~C
CN201	2P	2-H	6~7-I
CN203	2P	2-E~F	4-E
CN204	2P	5-D	12-H
CN205	3P	23-I	3-J

CN No.		LOCATION	GRID
CN206	2P	2-H	4-F
CN210	1P	2-A	10-J
CN211	1P	2-B	10-J
CN212	1P	2-B	13-L
CN215	2P	26-A	6-J
CN216	2P	5-A	13-B
CN217	4P	2-B	11-I
CN218	4P	2-B~C	10-K
CN221	2P	8-H	7-D
CN222	4P	8-I	7-D