SERVICE BULLETIN

■ PROBLEM	● FUNCTION	○ SAFETY
	○ SERVICEABILITY	○ OTHERS
□ OTHERS	○ PERFORMANCE	○ CORRECTION
	○ SAFETY REGULATION	○ OTHERS

MODEL NAME : Di620
MODEL CODE : 1155
NO. : 012
DATE : 981007
SUBJECT : TAKE-UP MISFEED IN C-304L

PROBLEM: In the C-304L, there is a possibility that the paper feed motor may be driven erroneously (backward), causing a take-up misfeed to occur.
CAUSE: There is a bug in the software program.
SOLUTION: The software program of IC2A (01) on P.W. Board-A has been changed.

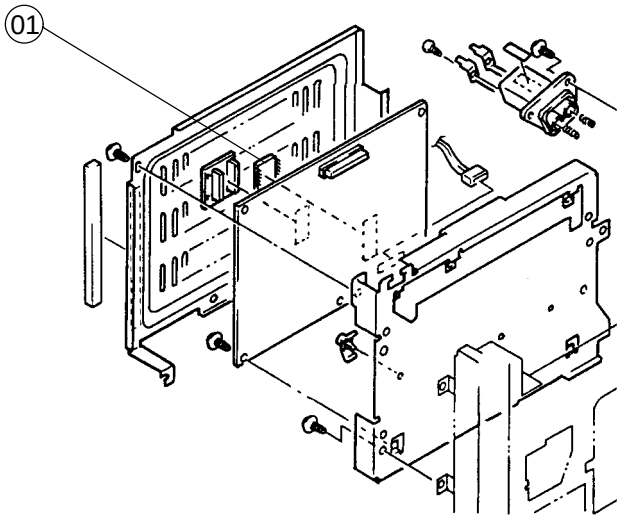

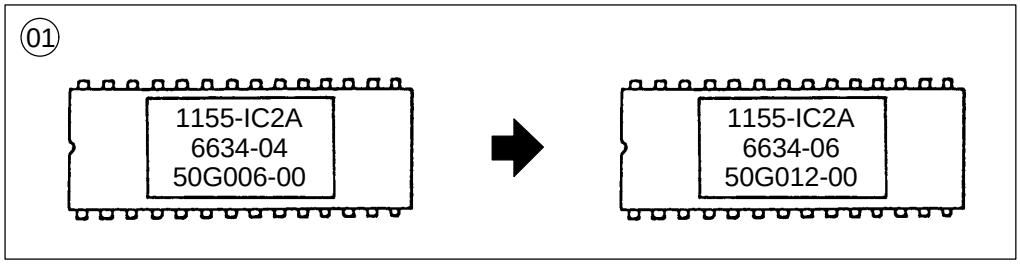

NO.	BEFORE MODI. F-IND	BEFORE MODI. PART NO.	AFTER MODI. PART NO.	AFTER MODI. F-IND	PART NAME	QTY →	I	SE/NO.	AREA
01	36-31AA	1155-6634-04	1155-6634-06	36-31AB	IC	1	1 Y	001539	0000