SERVICE BULLETIN

REVISED EDITION

☐ PROBLEM	○ FUNCTION	○ SAFETY
	○ SERVICEABILITY	○ OTHERS
■ OTHERS	○ PERFORMANCE	○ CORRECTION
	○ SAFETY REGULATION	● OTHERS

MODEL NAME : Di620
MODEL CODE : 1155
NO. : 015
DATE : 981106
SUBJECT : PM, SB, AND EXCLUSIVE PARTS FOR Di520

Di520 will be marketed as a sister model of Di620. Since Di520 uses almost all the same parts as Di620, the Parts Manual and Service Bulletins for Di520 will be handled as follows.

Parts Manual

Please refer to the Parts Manual for Di620.

Service Bulletin

The model name used in the header will remain “Di620.” The information unique to a particular model will be identified with the model name appearing within the text. Serial numbers are assigned throughout the two models.

Exclusive Parts

Exclusive Parts for Di520 are :
1) Front Door-LWR (01)
2) Label (02)
3) Harness (03)
4) IC (04)

Fig. 1

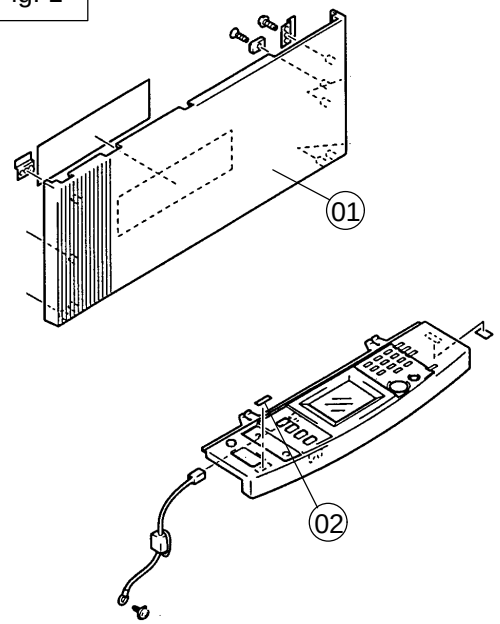

Fig. 36

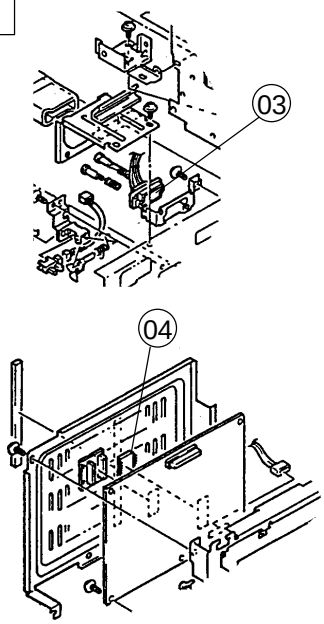

NO.	BEFORE MODI. F-IND	BEFORE MODI. PART NO.	AFTER MODI. PART NO.	AFTER MODI. F-IND	PART NAME	QTY →	I	SE/NO.	AREA
01			1155-1041-01	01-12CA	FRONT DOOR-LWR	1	Y	- - - - - -	0400
02			1155-7341-01	01-03BA	LABEL DI520	1	Y	- - - - - -	2704
03			1155-6863-01	36-50BA	HARNESS	1	Y	- - - - - -	0000
04			1155-6645-01	36-31BA	IC	1	Y	- - - - - -	0000

Remarks: For the Service Manual, use that of the Di620. For parts with different cleaning/replacement cycles between Di620 and Di520, use the following Di520 Maintenance Schedule.

■ PAPER TAKE-UP/TRANSPORT SECTION K=1,000 Copies

PM Parts	Maintenance Cycle (K) Clean	Maintenance Cycle (K) Replace	Part No.	QTY	Reference Page
Paper Take-Up Roll		300	1075-3051-01	3	D-13
Paper Feed Roll (*)		300	1075-3051-01	3	D-13
Paper Separator Roll (*)		300	1075-0162-02	3	D-13
Paper Empty Sensor	160				D-28
Paper Take-Up Clutch		1600	9322-1310-71	3	D-12
Vertical Transport Rollers (White)	160	1600	1075-3068-01	3	D-15
Vertical Transport Rollers (Black)	160	1600	1075-3067-02	3	D-15
Transport Roller (Upper)	160	1600	1075-3552-01	1	D-18
Transport Roller (Lower)	160	1600	1155-3559-01	1	D-18
Synchronizing Roller (Upper)	160	1600	1075-3552-01	1	D-18
Synchronizing Roller (Lower)	160	1600	1155-3508-01	1	D-18
Paper Dust Remover	160	480	1074-3316-01	2	D-18
Suction Belt	160				D-22
Multi Bypass Unit Paper Take-Up Roll		300	1052-5224-01	1	D-23
Paper Feed Roll		300	1052-5224-01	1	D-23
Paper Separator Roll		300	1075-0163-02	1	D-23

NOTE: Replace the parts marked with * at the same time.

160



ADDITION

■ DEVELOPING SECTION

PM Parts	Maintenance Cycle (K) Clean	Maintenance Cycle (K) Replace	Part No.	QTY	Reference Page
Developer		320			D-56
Ds Positioning Collars (Front)	160	1280	1155-5044-01	1	D-55
			1155-5045-01	1	
Ds Positioning Collars (Rear)	160	1280	1155-5044-01	1	D-55
			1155-5045-01	1	
Developer Scattering Prevention Seal		320	1075-5001-03	1	D-55
Developer Side Seal (Front)	160	1280	1075-5086-01	1	D-54
Developer Side Seal (Rear)	160	1280	1075-5094-03	1	D-54
1st. Sleeve/Magnet Roller Holder (Front)		1280	1075-0759-02	1	D-51
1st. Sleeve/Magnet Roller Holder (Rear)		1280	1075-0760-01	1	D-51
2nd. Sleeve/Magnet Roller Holder (Front)		1280	1075-0761-03	1	D-51
2nd. Sleeve/Magnet Roller Holder (Rear)		1280	1075-0762-02	1	D-51
Bucket Roller Bushings		1280	1051-1603-01	2	D-51
Conveying/Developer Mixing Screw Bushing (Front)		1280	1065-5106-01	1	D-51
Conveying/Developer Mixing Screw Bushing (Rear)		1280	1075-5154-01	1	D-51
Duct	320				D-55
Developer Scattering Prevention Filter		320	1075-5088-01	1	D-56

■ DRUM CHARGE/IMAGE TRANSFER CORONAS

PM Parts	Maintenance Cycle (K)		Part No.	QTY	Reference Page
	Clean	Replace			
PC Drum Charge Corona Grid Mesh	160	640	1155-4056-01	2	D-48
PC Drum Charge Corona Housing	160				D-49
PC Drum Charge Corona Comb Electrode		320	1161-4053-01	2	D-48
PC Drum Charge Corona Comb Electrode Cleaners		320	1139-4257-01	4	D-48
Image Transfer/Paper Separator Corona Housing	160				D-50
Image Transfer/Paper Separator Corona Wires Assy.		160	1075-0772-01	1	D-50
Pre-Image Transfer Guide Plate	80				D-50

■ FUSING SECTION

160



ADDITION

PM Parts	Maintenance Cycle (K)		Part No.	QTY	Reference Page
	Clean	Replace			
Upper Fusing Roller		480	1075-5768-01	1	D-60
Upper Fusing Roller Bearings*1		960	1075-5771-01	2	D-60
Upper Fusing Roller Bushings		480	1075-5772-01	2	D-60
Lower Fusing Roller		480	1129-2021-01	1	D-61
Lower Fusing Roller Bearings		960	1300-4394-26	2	D-61
Upper Fusing Roller Drive Gear		480	1161-5773-01	1	D-60
Web Roller		320	1145-5801-01	1	D-63
Web Pressure Roller		960	1075-5751-01	1	D-63
Upper Paper Separator Fingers		960	1074-5701-01	5	D-61
Lower Paper Separator Fingers		960	1075-5757-01	5	D-61
Fusing Unit Entrance Guide Plate	160	960	1155-5718-01	1	D-60
Upper Fusing Roller Thermistor	480	960	9372-2710-31	1	D-62
Lower Fusing Roller Thermal Fuse	480				D-62
Upper Transport Roller	160				D-64
Lower Transport Roller	160				D-64

*1: Apply grease (HP-500) at 480K.

■ OPTICAL SECTION

PM Parts	Maintenance Cycle (K)		Part No.	QTY	Reference Page
	Clean	Replace			
Mirrors/Lens	160				D-36
Cooling Fan Filter (PH Section)	480				D-36
Cooling Fan Filter (IR Section)	480				D-36
Scanner Rail/Slider Bushings	160 *1				D-33
Original Glass	160				D-33

■ PC SECTION

PM Parts	Maintenance Cycle (K)		Part No.	QTY	Reference Page
	Clean	Replace			
PC Drum		*2			D-42
Cleaning Blade		160	1074-0904-01	1	D-45
Toner Antispill Seal		480	1074-0156-01	1	D-44
Main Erase Lamp	160			1	D-42
AIDC Sensor	160			1	D-44
PC Drum Paper Separator Fingers	80				D-43
PC Drum Ground Plate		480	1138-2535-01	1	D-46
Ozone Filter (Drum Charge)		480	1162-7823-01	1	D-46
			1155-4033-01	1	
Ozone Filter (Image Transfer)		480	1155-3625-01	1	D-47
			1155-3611-01	1	
Toner Collecting Bottle		*2	1075-5655-03	1	D-47
Cleaning Felt Pad		480	1162-5583-01	2	D-42

*1: Wipe these parts with a dry cloth, then lubricate them.
*2: Replace at 150 hours.

■ TURNOVER UNIT

PM Parts	Maintenance Cycle (K)		Part No.	QTY	Reference Page
	Clean	Replace			
Turnover Roller	320				D-65
Transport Roller (Upper)	320				D-65
Transport Roller (Lower)	320				D-65