SERVICE BULLETIN

☐ PROBLEM	○ FUNCTION	○ SAFETY
	○ SERVICEABILITY	○ OTHERS
■ OTHERS	○ PERFORMANCE	○ CORRECTION
	○ SAFETY REGULATION	● OTHERS

MODEL NAME : Di620
MODEL CODE : 1155
NO. : 018
DATE : 981125
SUBJECT : SHAPE OF THE GEAR CHANGE

To increase the strength, the shape of the Gear (01) in the Fusing Unit has been changed. Due to this change, the P/No. of the Fusing Unit (02 to 04) has been changed.

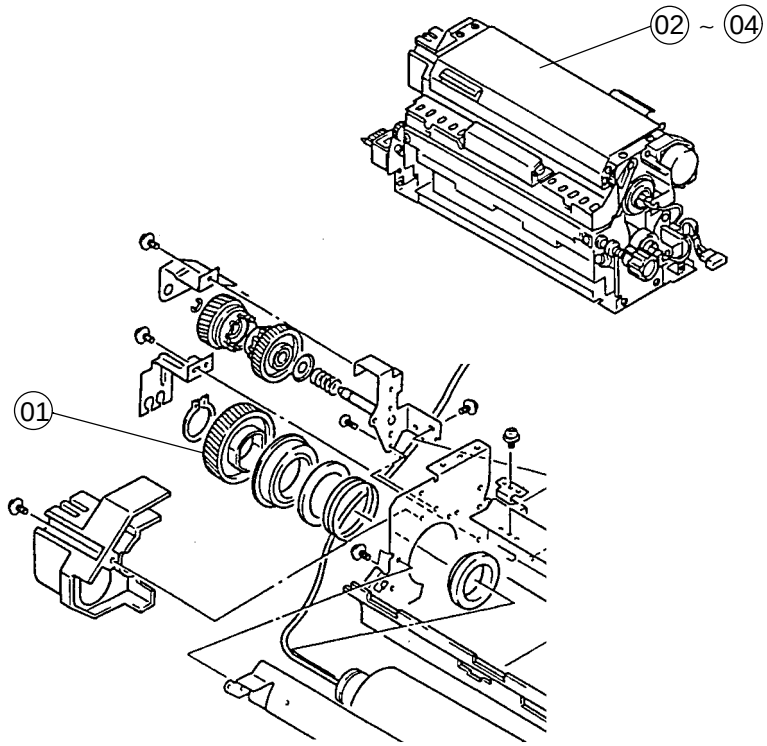

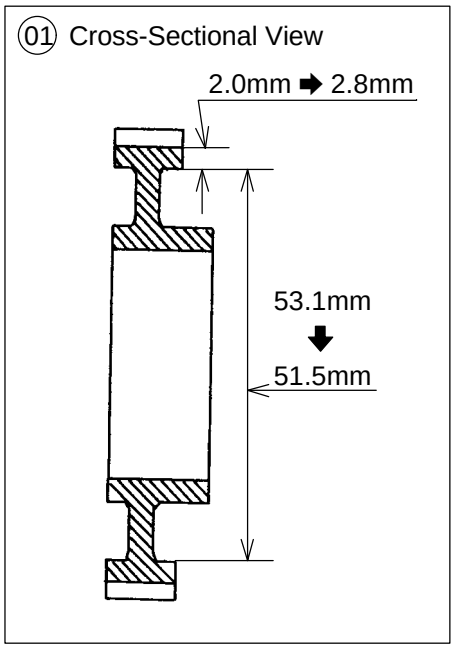

NO.	BEFORE MODI. F-IND	BEFORE MODI. PART NO.	AFTER MODI. PART NO.	AFTER MODI. F-IND	PART NAME	QTY →	QTY I	SE/NO.	AREA
01	30-16AA	1161-5773-01	1161-5773-02	30-16AB	GEAR 56T	1	1 Y	003179	0000
02	29-38AA	1155-0321-01	1155-0321-08	29-38AB	FUSING UNIT	1	1 Y	003179	0600
03	29-38BA	1155-0323-01	1155-0323-08	29-38BB	FUSING UNIT	1	1 Y	003179	2520
04	29-38CA	1155-0322-01	1155-0322-08	29-38CB	FUSING UNIT	1	1 Y	003179	2612