SERVICE BULLETIN

■ PROBLEM	● FUNCTION	○ SAFETY
	○ SERVICEABILITY	○ OTHERS
□ OTHERS	○ PERFORMANCE	○ CORRECTION
	○ SAFETY REGULATION	○ OTHERS

MODEL NAME : Di620
MODEL CODE : 1155
NO. : 018C
DATE : 981215
SUBJECT : STATUS MONITOR DISPLAY FAILURE

PROBLEM: In the machine equipped with the Pi6000, if a malfunction condition or paper jam occurs while the data from the personal computer is printed out, the machine conditions may not be indicated in the Status Monitor on the display of the PC.
CAUSE: There is a software bug.
SOLUTION: The software program of IC2W (02) and IC3W (01) on PWB-W has been changed.

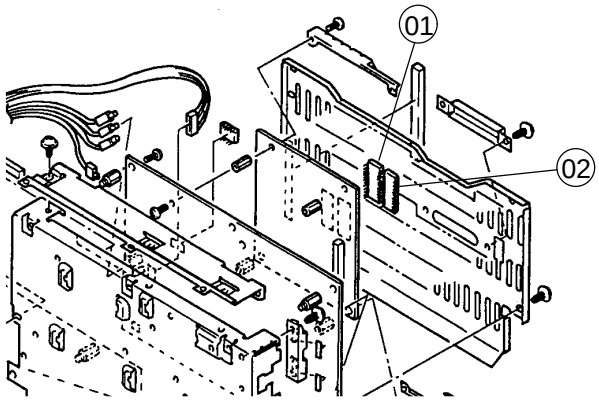

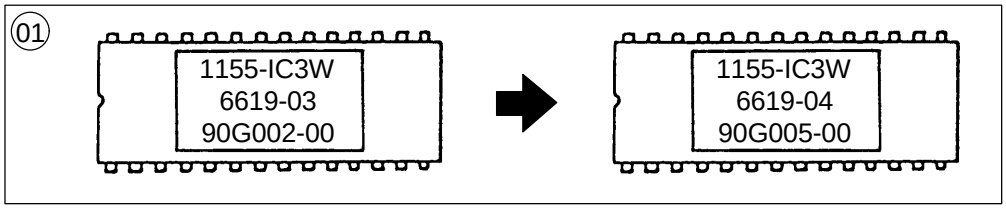

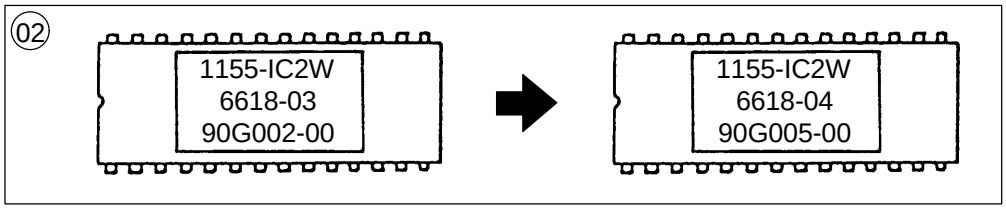

NO.	BEFORE MODI. F-IND	BEFORE MODI. PART NO.	AFTER MODI. PART NO.	AFTER MODI. F-IND	PART NAME	QTY →	QTY I	SE/NO.	AREA
01	36-62AB	1155-6619-03	1155-6619-04	36-62AC	IC	1	1 Y	001961	0000
02	36-63AB	1155-6618-03	1155-6618-04	36-63AC	IC	1	1 Y	001961	0000