SERVICE BULLETIN

☐ PROBLEM	○ FUNCTION	○ SAFETY
	○ SERVICEABILITY	○ OTHERS
■ OTHERS	○ PERFORMANCE	○ CORRECTION
	○ SAFETY REGULATION	● OTHERS

MODEL NAME : Di620
MODEL CODE : 1155
NO. : 019
DATE : 981215
SUBJECT : HOLDER CHANGE

To increase production efficiency, the film affixing face in the holder (01) has been changed from a curved face to a flat face, making the affixing of the polyester film (02) easier. Due to this modification, the dimensions of the polyester film (02) have been changed.

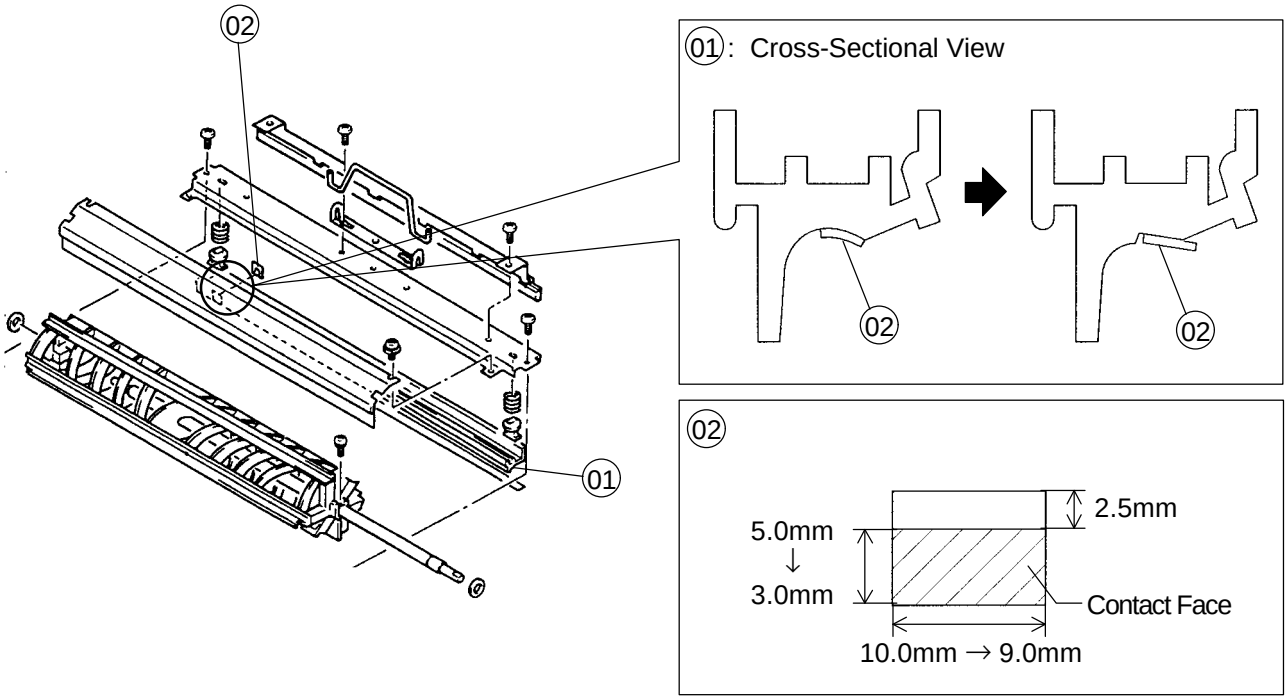

NOTE: The new holder (01) and polyester film (02) must be installed as a set in premodification machines.

NO.	BEFORE MODI. F-IND	BEFORE MODI. PART NO.	AFTER MODI. PART NO.	AFTER MODI. F-IND	PART NAME	QTY →		I	SE/NO.	AREA
01	18-50AA	1075-5066-02	1155-5066-12	18-50AB	HOLDER	1	1	S	003511	0000
02	18-03AA	1075-5100-01	1155-5086-12	18-03AB	POLYESTER FILM	1	1	S	003511	0000