# SERVICE BULLETIN

| | | |
|---|---|---|
| ■ PROBLEM | ○ FUNCTION | ○ SAFETY |
| | ○ SERVICEABILITY | ● OTHERS |
| □ OTHERS | ○ PERFORMANCE | ○ CORRECTION |
| | ○ SAFETY REGULATION | ○ OTHERS |

MODEL NAME : Di620
MODEL CODE : 1155
NO. : 028E
DATE : 990304
SUBJECT : COUNTERMEASURE FOR BLACK STREAKS WHEN EDH IS USED

PROBLEM: There is a possibility that black streaks in the feeding direction may occur on copies when the EDH is being used.
CAUSE: Dust sticks to the inner side of the EDH original glass.
SOLUTION: To prevent dust from entering, a sponge (01) and polyester film (02) have been newly made.

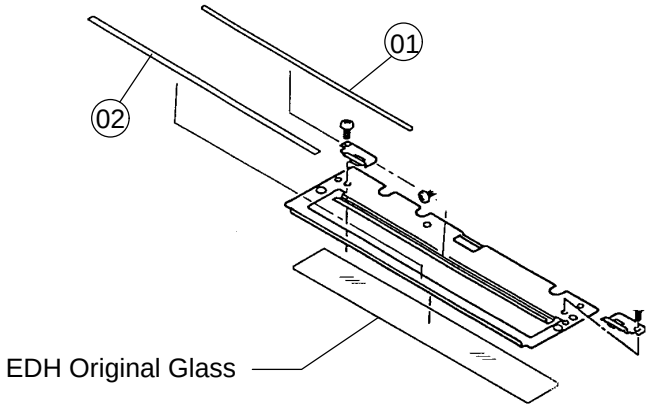


In connection with this change, the software program for IC26IB (03) on PWB-IB, IC21B (04, 05) and IC70B (06) have been changed to add a new function of “Density (ADF)” to p. 6/6 of the User’s Choice screen. (This function is valid only when the EDH is used and not when the original is placed manually.)

When Mode 1 is selected, the copier uses a gradation curve that cancels out low image density areas, which effectively prevents black streaks from occurring even when tiny dust particles stick to the EDH original glass.

Select the appropriate mode according to the need as detailed below:
1) Using ordinary originals (such as printouts from a word processor): Select mode 1.
2) To ensure better reproduction of faint originals: Select mode 2.

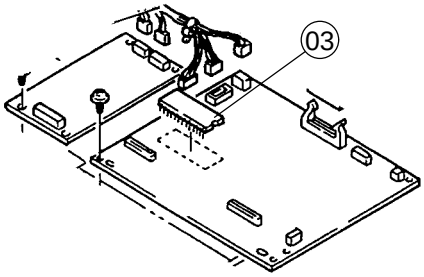


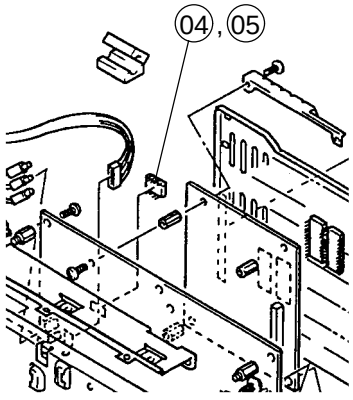

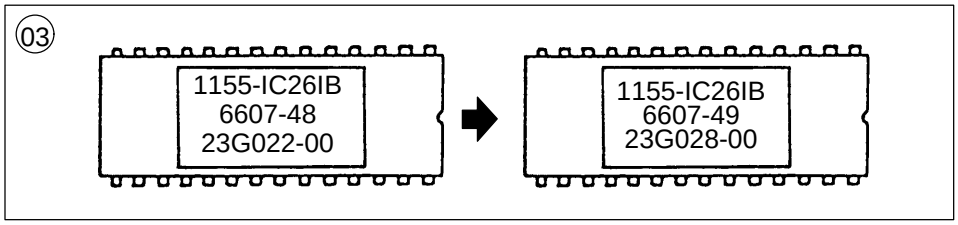


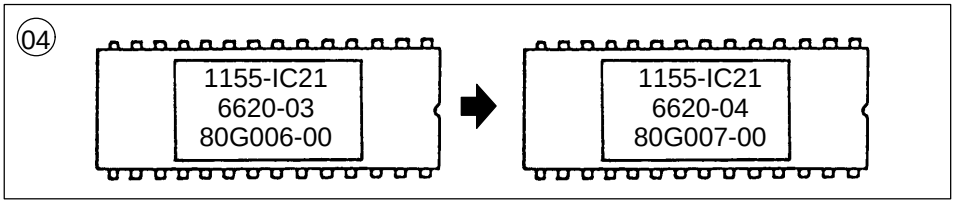


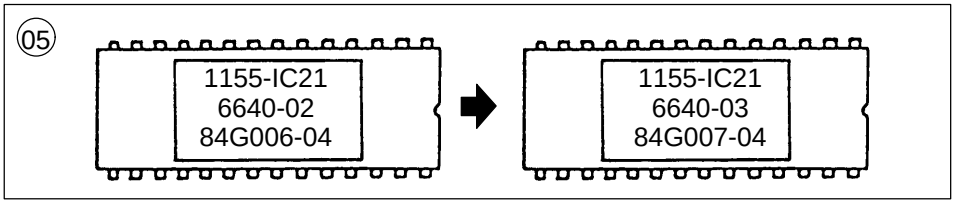


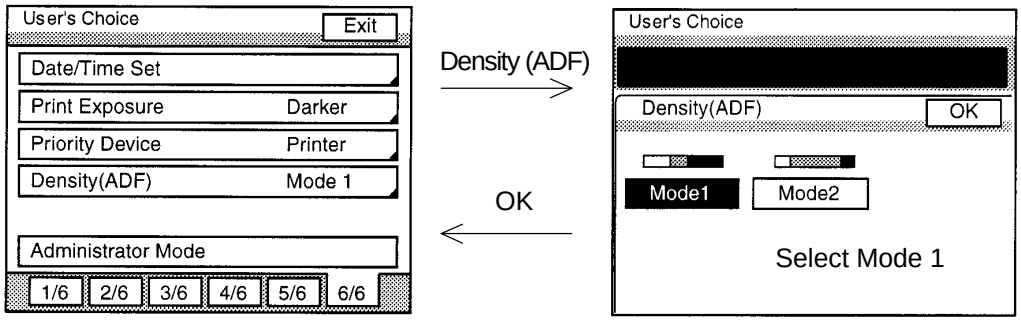


MODE 1: The copier uses a gradation curve that cancels out black streaks. (Default)
MODE 2: The copier uses the ordinary gradation curve.

NOTE 1: The memory program for the memory card IC (06) has been changed as a result of the change made for IC70B.

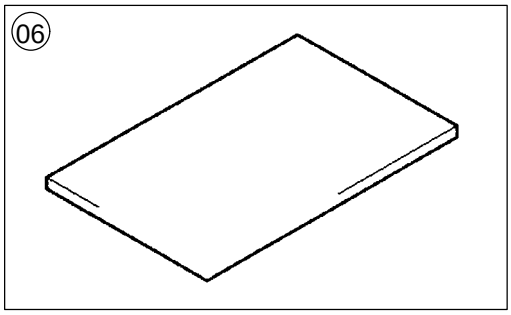


IC70B VERSION: 10G0-37-00 ➡ 10G0-44-00

NOTE 2: The software program for the language ROM (07, 08) has also been changed in the same way as for IC21B (04, 05) .

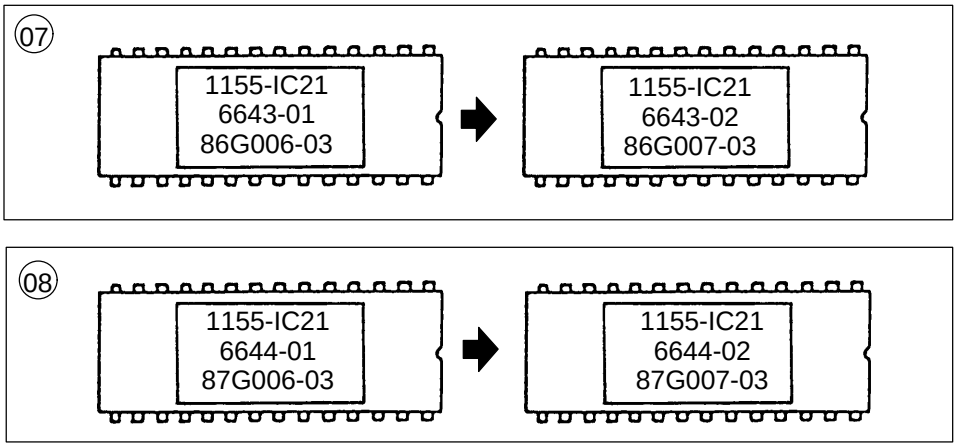


NOTE 3: The new IC26IB (03) and IC21B (04, 05, 07 or 08) must be installed as a set in premodification machines, and have data rewritten using the new memory card IC (06).

| NO. | BEFORE MODI. F-IND | BEFORE MODI. PART NO. | AFTER MODI. PART NO. | AFTER MODI. F-IND | PART NAME | QTY → | | I | SE/NO. | AREA |
|---|---|---|---|---|---|---|---|---|---|---|
| 01 | | | 1155-1630-01 | 03-48AA | SPONGE | | 1 | Y | 004516 | 0000 |
| 02 | | | 1155-1631-01 | 03-49AA | POLYESTER FILM | | 1 | Y | 004516 | 0000 |
| 03 | 11-32AB | 1155-6607-48 | 1155-6607-49 | 11-32AC | IC | 1 | 1 | S | 003161 | 0000 |
| 04 | 36-03AB | 1155-6620-03 | 1155-6620-04 | 36-03AC | IC | 1 | 1 | S | 003161 | 0715 |
| 05 | 36-03BB | 1155-6640-02 | 1155-6640-03 | 36-03BC | IC | 1 | 1 | S | 003451 | 2713 |
| 06 | 46-35AC | 1155-0753-03 | 1155-0753-04 | 46-35AD | JIG MEMORY CARD | 1 | 1 | S | 003161 | 0000 |
| 07 | | 1155-6643-01 | 1155-6643-02 | | IC | 1 | 1 | S | - - - - - - | 2706 |
| 08 | | 1155-6644-01 | 1155-6644-02 | | IC | 1 | 1 | S | - - - - - - | 2706 |