SERVICE BULLETIN

☐ PROBLEM	○ FUNCTION	○ SAFETY
	○ SERVICEABILITY	○ OTHERS
■ OTHERS	○ PERFORMANCE	○ CORRECTION
	○ SAFETY REGULATION	● OTHERS

HD KIT

MODEL NAME : Di620
MODEL CODE : 1155
NO. : 036
DATE : 990602
SUBJECT : BRACKET FOR PWB-R ADDED

To make it possible to install the HD kit in a machine which has had the printing speed increased, a new bracket (01) for PWB-R has been packed in the HD kit. In the European machine, the bracket (01) is not used because the HD kit was already included as standard equipment before the printing speed was increased.

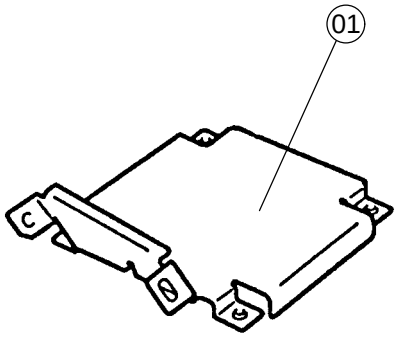

NO.	BEFORE MODI. F-IND	BEFORE MODI. PART NO.	AFTER MODI. PART NO.	AFTER MODI. F-IND	PART NAME	QTY →	I	SE/NO.	AREA
01			1155-2477-01		BRACKET	1	Y	000010	0000