SERVICE BULLETIN

■ PROBLEM	●	FUNCTION	○	SAFETY
	○	SERVICEABILITY	○	OTHERS
□ OTHERS	○	PERFORMANCE	○	CORRECTION
	○	SAFETY REGULATION	○	OTHERS

MODEL NAME : Di620
MODEL CODE : 1155
NO. : 037
DATE : 990609
SUBJECT : NOISE FROM THE CLEANING UNIT

PROBLEM: Noise can at times occur from the Cleaning Unit drive mechanism.
CAUSE: Variations in accuracy of the drive gear and associated parts result in varying distances between the shaft of the Toner Conveying Coil gear and that of gear A (that transmits drive from PC Drum Drive Motor M2).
SOLUTION: The following changes have been made:

1. A Toner Conveying Coil fixing holder (01) has been added.
2. A hole (ϕ3.7mm) has been drilled into the mounting bracket (02) that is used to secure the holder (01).
3. The dimensions of the Toner Conveying Coil (03) and the shaft on which gear A is mounted have been changed.

NOTE: The new gear A mounting shaft is valid effective with machines starting with Se/No. ××7436 and onward.

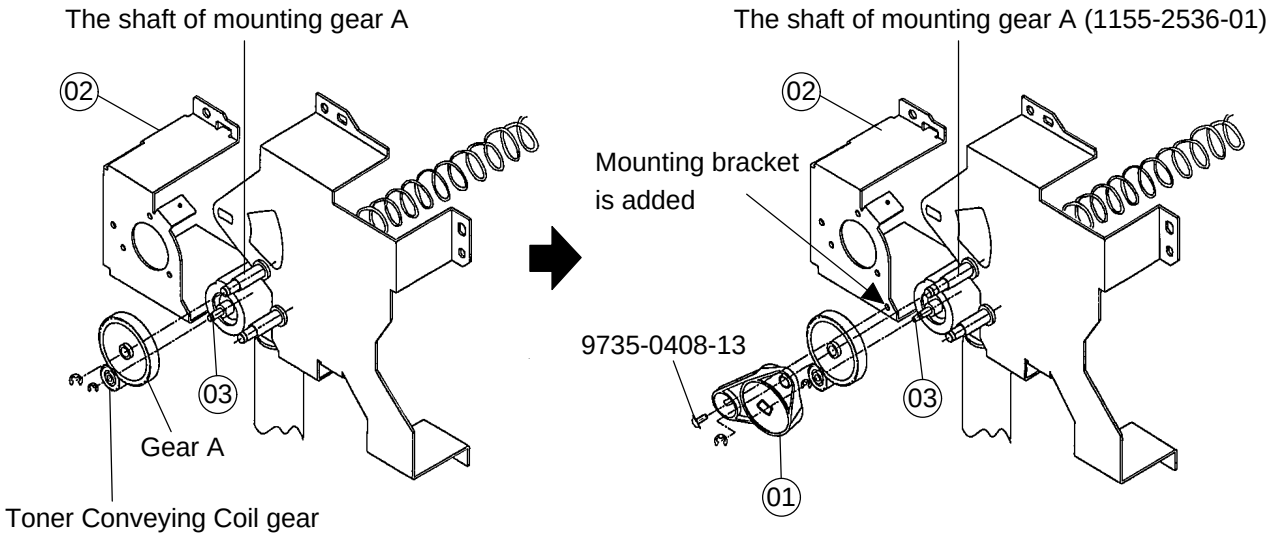

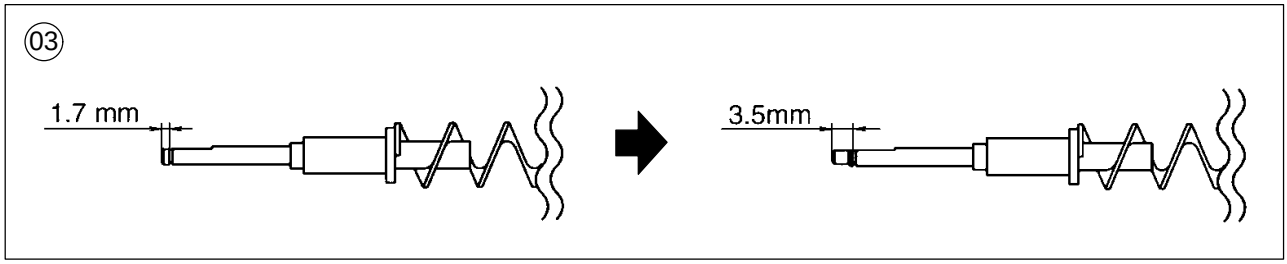

The shaft of mounting gear A

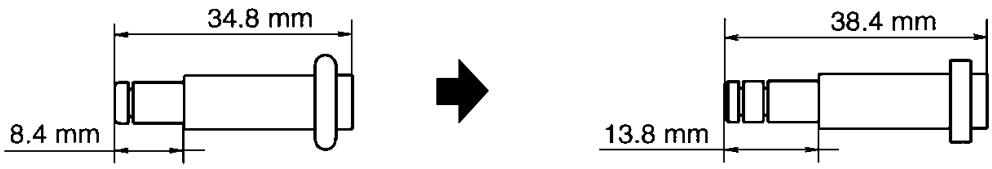

NO.	BEFORE MODI. F-IND	BEFORE MODI. PART NO.	AFTER MODI. PART NO.	AFTER MODI. F-IND	PART NAME	QTY →		I	SE/NO.	AREA
01	08-41AA	1155-2502-01	1155-2502-02	08-41AB	BRACKET	1	1	Y	007436	0000
02			1155-5652-01	08-44AA	HOLDER		1	N	007436	0000
03	21-03AA	1075-5506-01	1155-5506-01	21-03AB	CONVEYOR ROLLER	1	1	Y	007564	0000