PARTS MODIFICATION NOTICE

REF NO. : MO000101
DATE : 1999/12/07
MODEL NAME : Di620
MODEL CODE : 1155
PMN NO. : 044

MODEL NAME : Di620
SUBJECT : DIMENSIONS OF SHAFT CHANGE
KDB NO. : KB9900328

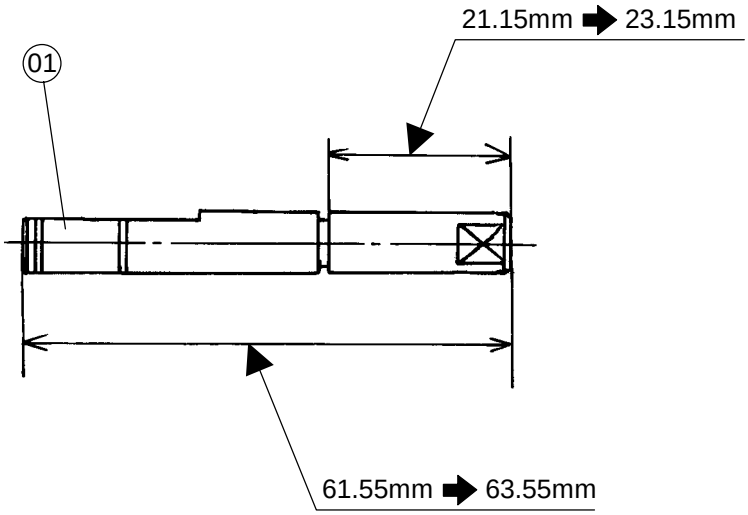

MODEL CODE	NO.	FIG	IND	BEFORE MODI. P/NO.	AFTER MODI. P/NO.	QTY →		I	PART NAME / SFIX	SE/NO.
1155	01	06	28	1155-5770-02	1155-5770-03	1	1	Y	SHAFT 000	XX10506