1159SBG000AA

EP1030/EP1030F
EP1031/EP1031F

GENERAL, MECHANICAL/ ELECTRICAL

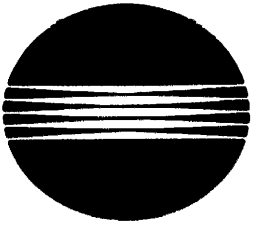

MINOLTA

SAFETY INFORMATION

ALL Areas

CAUTION

Danger of explosion if battery is incorrectly replaced.
Replace only with the same or equivalent type
recommended by the manufacturer.
Dispose of used batteries according
to the manufacturer s instructions.

Denmark only

ADVARSEL!

Lithiumbatteri - Eksplosionsfare ved fejlagtig handtering.
Udskiftning ma kun ske med batteri
af samme fabrikat og type.
Lever det brugte batteri tilbage til leverandmren.

Norway only

ADVARSEL

Eksplosjonsfare ved feilaktig skifte av batteri.
Benytt samme batteritype eller en tilsvarende
type anbefalt av apparatfabrikanten.
Brukte batterier kasseres i henhold til fabrikantens
instruksjoner.

Sweden only

VARNING

Explosionsfara vid felaktigt batteribyte.
Använd samma batterityp eller en ekvivalent
typ som rekommenderas av apparattillverkaren.
Kassera använt batteri enligt fabrikantens
instruktion.

Finland only

VAROITUS

Paristo voi räjähtää, jos se on virheellisesti asennettu.
Vaihda paristo ainoastaan laitevalmistajan suosittelemaan
tyyppiin. Hävitä Käytetty paristo valmistajan ohjeiden
mukaisesti.

1159SBG000BA

CONTENTS

GENERAL

1. SPECIFICATIONS ..... G-I
2. PRECAUTIONS FOR INSTALLATION G-6
3. PRECAUTIONS FOR USE G-7
4. HANDLING OF THE CONSUMABLES G-8
5. SYSTEM CONFIGURATION G-9

1159SBM000BA

MECHANICAL/ELECTRICAL

1. CROSS-SECTIONAL VIEW ..... M-I
2. COPY PROCESS M-2
3. DRIVE SYSTEM M-4
4. OPERATIONAL SEQUENCE M-5
5. PC DRUM M-8
6. IMAGING UNIT M-9
   - 6-1. Imaging Unit Drive M-10
   - 6-2. Toner Recycling M-11
   - 6-3. IU Fuse F1 ..... M-11
7. DEVELOPMENT ..... M-I 2
   - 7-1. ATDC Sensor M-13
   - 7-2. Magnet Roller M-15
   - 7-3. Developing Bias ..... M-I 6
   - 7-4. Doctor Blade M-17
   - 7-5. Magnet Roller Lower Filter M-17
8. CLEANING UNIT M-18
9. TONER HOPPER M-19
   - 9-1. Toner Replenishing ..... M-I 9
   - 9-2. Toner Replenishing Control M-20

IO. DRUM CHARGING M-21

11. IMAGE ERASE LAMP (EP1031/EP1031 F ONLY) M-22

CONTENTS

12. OPTICAL SECTION M-24

12-1. Exposure Lamp LA1 ..... M-25
12-2. AE Sensor M-26
12-3. Lamp Reflectors M-27
12-4. Aperture Plates M-27
12-5. Scanner and 2nd/3rd Mirror Carriage Movement M-28
12-6. 4th Mirror Movement (EP1031/EP1031F ONLY) M-30
12-7. Lens Movement (EP1031/EP1031F ONLY) M-31

13. MAIN ERASE LAMP M-32

14. IMAGE TRANSFER AND PAPER SEPARATION M-33

15. PAPER TAKE-UP/FEED SECTION M-34

15-I. Edge Guide and Trailing Edge Stop M-35
15-2. Drawer Positioning M-36
15-3. Paper Lifting Plate M-36
15-4. Paper Empty Detection M-37
15-5. Paper Separating Mechanism M-38
15-6. Paper Take-Up Roll M-39
15-7. Paper Take-Up Retry Control M-40

16. VERTICAL PAPER TRANSPORT M-41

17. SYNCHRONIZING ROLLERS M-42

17-I. Upper Synchronizing Roller Positioning M-43
17-2. Paper Dust Remover M-43
17-3. Synchronizing Roller Control M-44

18. PAPER TRANSPORT M-45

19. FUSING UNIT M-46

19-I. Fusing Temperature Control M-47
19-2. Fusing Rollers Pressure Mechanism M-48

20. EXIT UNIT M-49

20-1. Upper/Lower Separator Fingers M-49
20-2. Paper Exit Sensor M-50

21. MULTI BYPASS TABLE M-51

21-I. Paper Take-Up Mechanism M-52
21-2. Paper Separating Mechanism M-53

22. COOLING FAN M-54

23. OPTICAL SECTION COOLING FAN M-55

CONTENTS

24. SEMI-AUTOMATIC DOCUMENT HANDLER (SDH) M-56
24-1. Document Take-Up Mechanism M-56
24-2. Document Separating Mechanism M-56
24-3. Document Transport/Exit Mechanism M-57
24-4. SDH Mode M-58
25. MEMORY BACKUP M-5 9

GENERAL

1 SPECIFICATIONS

EP1030/EP1030F, EP1031/EP1031 F Specifications

TYPE	Desk Top Copier with Stationary Platen
PHOTOCONDUCTOR	Organic Photoconductor
COPYING SYSTEM	Electrostatic Dry Powdered Image Transfer to Plain Paper
PAPER FEEDING SYSTEM	2-Way Feeding Universal Tray (250 sheets) ·Multi Bypass Table (30 sheets)* *(EP1031/EP1031 F only)
EXPOSURE SYSTEM	Slit exposure
DEVELOPING SYSTEM	New Micro-Toning System
CHARGING SYSTEM	Comb Electrode DC Negative Charger with Scorotron Grid
IMAGE TRANSFER SYSTEM	Visible Image Transfer by means of a Single-Wire DC Negative Charger
PAPER SEPARATING SYSTEM	Natural separation from the small-diameter PC Drum because of the inherent strength in paper, plus DC bias
FUSING SYSTEM	Roller packed with heat insulator
PAPER CHARGE NEUTRALIZATION	Charge Neutralizing Brush
ORIGINAL SIZE	Inch Areas: 8-1/2" x 14" (Legal) Metric Areas: 210 × 297 mm (A4)

COPY PAPER

			Universal Tray (automatic take-up)	Multi Bypass Tray (30 sheets)
Copy Media	Plain paper (60 to 90 g/m²)		0	0
	OHP transparencies		X	0
	Thick paper (up to 110 g/m*)		X	○
	Postcards		×	○
Copy Paper Size	Max. (width x length)	Inch Areas	8-1/2" x 14"L	8-1/2" x 14 L
		Metric Areas	210 x 297 mm	210 x 297 mm
	Min. (width x length)	Inch Areas	5-1/2" × 8-1/2"L	4" x 5-3/4" mm
		Metric Areas	148 x 210 mm	98 x 140 mm

0: Acceptable x: Unacceptable

MULTIPLE COPIES : Up to 99 copies (in SDH mode)

WARMING-UP TIME

115V	9.9 sec.
120V	9.1 sec.
127V	7.5 sec.
220v	10.9 sec.
230V	9.9 sec.
240V	9.1 sec.

FIRST COPY SPEED

Inch Areas	6.4 sec. or less (8-1/2" x 11"L)
Metric Areas	6.5 sec. or less (A4L)

CONTINUOUS COPY SPEED (copies/min.)

Zoom ratio x 1 .OO, paper fed from Universal Tray

<Normal Mode>

Size		Area
A4L	13	Metric
A5L	13	
Legal L	13	Inch
Letter L	13	
Invoice L	13	

<SDH Mode>

Size		Area
A4L	13	Metric
A5L	13	
Legal L	12	h
Letter Ln	13 c	
Invoice L	13	

ZOOM RATIOS
<EP1031/EP1031F>

		Inch Areas	Metric Areas
Fixed Ratios	Full Size	x 1 .oo	
	Reductions	x 0.78	x 0.81
		x 0.64	x 0.70
	Enlargements	x 1.54	x 1.41
		x 1.29	xl.15
Variable Ratios	x 0.64 to x l . 5 6	(in x 0.01 increments)	

<EP1030/EP1030F> : Full size (X 1 .OO) only

LENS Through Lens (F = 7.5, f = 165 mm)

EXPOSURE LAMP : Halogen Frost Tube Lamp

FUSING TEMPERATURE 200°C/190°C

POWER/CURRENT CONSUMPTION (Copier only)

	115V	120V	127V	220V	230V	240V
Exposure Lamp (Rating)	80V 2oow	80V 2oow	80V 2oow	160V 2oow	160V 2oow	160V 2oow
Fusing Heater (Rating)	115v 850W	115v 850W	115v 850W	230V 850W	230V 850W	230V 850W
Max. power consumption	1040W	1120W	1220W	990W	1060W	1130W
In standby	290W	320W	360W	280W	300W	330W
Max. current consumption	9.3A	9.5A	9.9A	4.6A	4.7A	4.8A

POWER REQUIREMENTS : 115 to 127V, 60Hz
220 to 240V, 50/60Hz

ENVIRONMENTAL REQUIREMENTS

Temperature	10 to 35°C (50 to 95°F) (Temperature Gradient 10°C/h or less)
Humidity	15 to 85%RH (Humidity Gradient 20%RH/h or less)
Ambient Illuminance	300 lux or less
Inclination	1° or less off horizontal

Copier Dimensions (mm)

	Width	Depth	Height*
EP1031	558	451	281
EP1031F	558	456	357

	Width	Depth	Height*
EP1030	529	451	281
EP1030F	529	456	358

*Including SDH (For a copier not equipped with an SDH, up to the document surface level)

COPIER WEIGHT (excluding Copy Tray, starter, toner, and copy paper)
WITH SDH : 25 kg
WITHOUT SDH : 22 kg
ACCESSORIES : Operator s Manual, Setting-upInstructions, Exit Tray

SDH Specifications

NAME Semi-Automatic Document Handler (SDH)

TYPE Take-Up = Straight take-up from the top of the stack of documents
Transport = Roller transport
Ejection = Roller transport and U-turn ejection

INSTALLATION Mounted on top of copier

TYPE OF DOCUMENT : Plain paper (50 to 110 g/m^2)

DETECTABLE DOCUMENT SIZE A5L to 8-1/2" x 14

TRAY CAPACITY :
- Document Feeding Tray : 50 sheets (A4, 80 g/m^2 or less)
  30 sheets (A4, 80 g/m^2 or more)
- Document Exit Tray : 50 sheets (A4, 80 g/m^2 or less)

ALIGNMENT Centrally aligned

DOCUMENT PLACEMENT: Face down

MODE

POWER REQUIREMENTS : DC24V (supplied from copier)

DOCUMENTS WHICH CANNOT BE USED : The following types of documents, if used in the SDH, are very likely to cause trouble.

Type of Document	Possible Trouble
Documents stapled or clipped together	Take-up failure, damaged document, defective drive train due to jammed staples or clips.
Plastic transparencies	Take-up failure due to static electricity
Documents glued together	Take-up failure, damaged document
Documents folded, torn, or wrinkled	Damaged document, documents misfed due to being fed askew
Documents severely curled	Documents misfed due to being dog-eared or fed askew
Coated paper	Documents misfed due to being fed askew

DOCUMENTS FOR WHICH FEEDING CANNOT BE GUARANTEED : The following types of documents, if used in the SDH, may or may not cause trouble.

Type of Document	Possible Trouble
Paper to which Scotch tape has been applied	Take-up failure, skew
Documents pasted with cut paper	Torn pasted paper
Slightly curled documents	Dog-eared pages, ejection failure
Heat-sensitive paper for fax machines	Crease, ejection failure
Coated documents	Take-up failure
Translucent paper	Take-up failure, transport failure
Paper just fed out of copier	Take-up failure, transport failure
Paper weighing less than 50 g/m^2	Take-up failure, transport failure
Damp, untensile paper	Take-up failure, transport failure
Paper with an extremely rough surface (letterhead, etc.)	Take-up failure, transport failure
Pencil-written documents	Take-up failure, transport failure
Two-fold, Z-fold documents	Transport failure, folded leading edge
Documents of a nonstandard size with a width of 139.7 mm to **216** mm	Transport failure, distorted image.

2 PRECAUTIONS FOR INSTALLATION

■ Installation Site

To ensure safety and utmost performance of the copier, the copier should NOT be used in a place:

- Where it will be subject to extremely high or low temperature or humidity.
- Which is exposed to direct sunlight.
- Which is in the direct air stream of an air conditioner, heater or ventilator.
- Which puts the operator in the direct stream of exhaust from the copier.
- Which has poor ventilation.
- Where ammonia gas might be generated.
- Which does not have a stable, level floor,
- Where it will be subject to sudden fluctuations in either temperature or humidity. If a cold room is quickly heated, condensation forms inside the copier, resulting in blank spots in the copy.
- Which is near any kind of heating device.
- Where it may be splashed with water.
- Which is dirty or where it will receive undue vibration,
- Which is near volatile flammables or curtains,

■ Power Source

Use an outlet with a capacity of 115/120/127V, 13.2A or more, or 200/220/240V, 8.1 A or more.

- If any other electrical equipment is sourced from the same power outlet, make sure that the capacity of the outlet is not exceeded.
- Use a power source with little voltage fluctuation.
- Never connect by means of a multiple socket any other appliances or machines to the outlet being used for the copier.
- Make the following checks at frequent intervals:
  - Is the power plug abnormally hot?
  - Are there any cracks or scrapes in the cord?
  - Has the power plug been inserted fully into the outlet?
  - Does something, including the copier itself, ride on the power cord?
- Ensure that the copier does not ride on the power cord or communications cable of other electrical equipment, and that it does not become wedged into or underneath the mechanism.

■ Grounding

To prevent receiving electrical shocks in the case of electrical leakage, always ground the copier.

- Connect the grounding wire to:
  - The ground terminal of the outlet.
  - A grounding contact which complies with the local electrical standards.
- Never connect the grounding wire to a gas pipe, the grounding wire for a telephone, or a water pipe.

3 PRECAUTIONS FOR USE

To ensure that the copier is used in an optimum condition, observe the following precautions.

- Never place a heavy object on the copier or subject the copier to shocks.
- Insert the power plug all the way into the outlet.
- Do not attempt to remove any panel or cover which is secured while the copier is making copies.
- Do not turn OFF the Power Switch while the copier is making copies.
- Provide good ventilation when making a large number of copies continuously.
- Never use flammable sprays near the copier.
- If the copier becomes inordinately hot or produces abnormal noise, turn it OFF and unplug it.
- Do not turn ON the Power Switch at the same time when you plug the power cord into the outlet.
- When unplugging the power cord, do not pull on the cord; hold the plug and pull it out.
- Do not bring any magnetized object near the copier.
- Do not place a vase or vessel containing water on the copier.
- Be sure to turn OFF the Power Switch at the end of the workday or upon power failure.
- Use care not to drop paper clips, staples, or other small pieces of metal into the copier.

■ Operating Environment

The operating environmental requirements of the copier are as follows.

- Temperature: 10°C to 30° C with a fluctuation of 10° C per hour
- Humidity: 15% to 65% RH with a fluctuation of 10% RH per hour

■ Power Requirements

The power source voltage requirements are as follows.

- Voltage Fluctuation: AC1 15/120/127/220/230/240V
  ± 10% (Copying performance assured)
  -15% (Paper feeding performance assured)
  (*AC127V: $^{+6}_{-10}$ %)
- Frequency Fluctuation: 50/60 Hz ± 0.3%

4 HANDLING OF THE CONSUMABLES

Before using any consumables, always read the label on its container carefully.

- Use the right toner. The applicable copier model name is indicated on the Toner Bottle.
- Paper is apt to be easily damaged by dampness. To prevent absorption of moisture, store paper, which has been removed from its wrapper but not loaded into the drawer, in a sealed plastic bag in a cool, dark place.
- Keep consumables out of the reach of children,
- Do not touch the PC Drum with bare hands.
- Store the paper, toner, and other consumables in a place free from direct sunlight and away from any heating apparatus.
- The same sized paper is of two kinds, short grain and long grain. Short grain paper should only be fed through the copier crosswise, long grain paper should only be fed lengthwise.
- If your hands become soiled with toner, wash them with soap and water immediately.
- Do not throw away any used consumables (PC Drum, starter, toner, etc.). They are to be collected.

NOTE

Do not burn, bury in the ground, or throw into the water any consumables (PC Drum, starter, toner, etc.).

5 SYSTEM CONFIGURATION

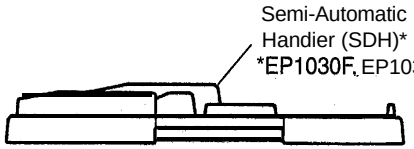

1159M040AA

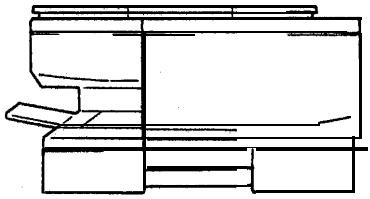

1159M041AA

MECHANICAL/ ELECTRICAL

1159SBM0100A

1 CROSS-SECTIONAL VIEW

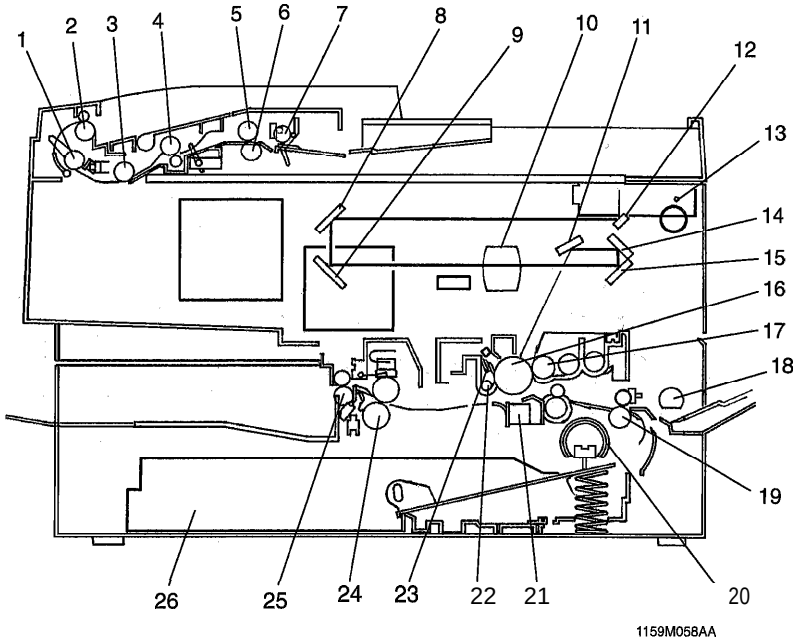

SDH: EP1030F, EP1031F only

1. Document Transport Roller 2
2. Document Exit Roller
3. Document Transport Roller 1
4. Document Registration Roller
5. Document Feed Roll
6. Document Separator Roll
7. Document Take-Up Roll

Copier

8. 2nd Mirror
9. 3rd Mirror
10. Lens
11. 6th Mirror
12. 1st Mirror
13. Exposure Lamp
14. 5th Mirror
15. 4th Mirror
16. PC Drum
17. Magnet Roller
18. Multi Bypass Take-Up Roll
19. Transport Roller
20. Paper Take-Up Roll
21. Image Transfer/Paper Separator Coronas
22. Main Erase Lamp
23. Cleaning Blade
24. Fusing Roller
25. Exit Roller
26. Universal Tray

2 COPY PROCESS

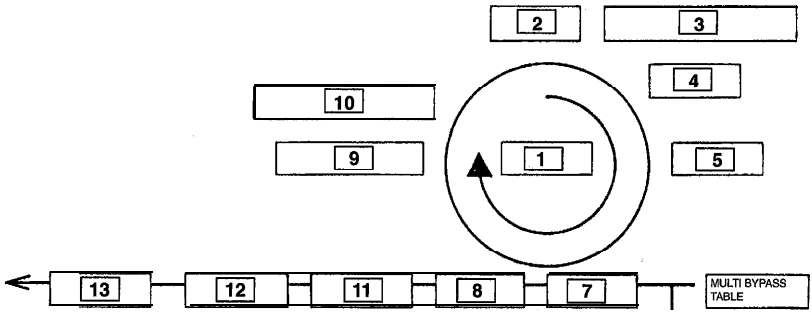

1. PC DRUM
2. DRUM CHARGING
3. IMAGE ERASE
4. EXPOSURE
5. DEVELOPING
6. PAPER FEEDING
7. IMAGE TRANSFER
8. PAPER SEPARATION
9. CLEANING
IO. MAIN ERASE
11. TRANSPORT
12. FUSING
13. PAPER EXIT

1. PC Drum

The PC Drum is an aluminum cylinder coated with a photosensitive semiconductor. It is used as the medium on which a visible developed image of the original is formed.

(For more details, see p. M-9.)

2. Drum Charging

The PC Drum Charge Corona Unit is equipped with a Comb Electrode and a Scorotron Grid to deposit a uniform negative charge across the entire surface of the PC Drum.

(For more details, see p. M-21 .)

3. Image Erase

Any areas of charge which are not to be developed are neutralized by lighting up LEDs.

(For more details, see p. M-22.)

4. Exposure

Light from the Exposure Lamp reflected off the original is guided to the surface of the PC Drum and reduces the level of the negative charges, thereby forming an electrostatic latent image.

(For more details, see p. M-24.)

5. **Developing**

Toner positively charged in the Developer Mixing Chamber is attracted onto the electrostatic latent image changing it to a visible, developed image. A DC negative bias voltage is applied to the Sleeve/Magnet Roller to prevent toner from being attracted onto those areas of the PC Drum which correspond to the background areas of the original.

(For more details, see p. M-12.)

6. Paper Feeding
Paper is fed either automatically from the Drawer, or manually via the Multi Bypass Table or Manual Bypass Table. Each Drawer has fingers that function to separate the top sheet of paper from the rest at take-up.

(For more details, see p. M-34.)

7. Image Transfer
The single-wire Image Transfer Corona Unit applies a DC negative corona emission to the underside of the paper, thereby attracting toner onto the surface of the paper.

(For more details, see p. M-33.)

8. Paper Separation
The paper, thanks to its inherent strength, is naturally separated from the small-diameter PC Drum. This is combined with the application of a positive DC bias with a comb electrode. The two methods ensure that the paper is definitely separated from the surface of the PC Drum.

(For more details, see p. M-33.)

9. Cleaning
Residual toner on the surface of the PC Drum is scraped off by the Cleaning Blade.

(For more details, see p. M-18.)

10. Main Erase Lamp
The Main Erase Lamp applies a positive DC charge to neutralize any surface potential remaining on the surface of the PC Drum after cleaning.

(For more details, see p. M-32.)

11. Transport
The paper is fed to the Fusing Unit by the Guide Plate.

(For more details, see p. M-45.)

12. Fusing
The developed image is permanently fused to the paper by a combination of heat and pressure applied by the Upper and Lower Fusing Rollers.

(For more details, see p. M-46.)

13. Paper Exit
After the fusing process, the paper is fed out by the Paper Exit Roller onto the Copy Tray.

(For more details, see p. M-49.)

1159SBM0300A

3 DRIVE SYSTEM

Main Drive Motor Ml of this copier is used to drive the Imaging Unit, paper take-up and transport mechanisms, and Fusing Unit. its drive is transmitted via gear trains as follows.

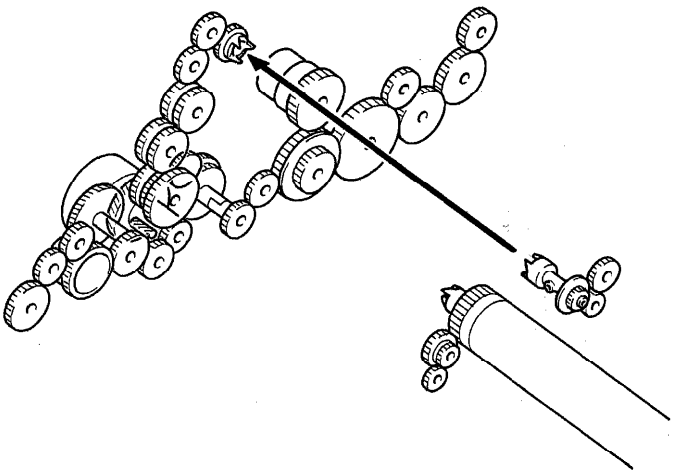

1159M042AA

4 OPERATIONAL SEQUENCE

*Figures given in ☐ in the following flowchart represent timer values in seconds.

A Power Switch S1 is turned ON.

S1 ON

- DC24V (PU1)
- DC5V
- Control panel
- Ozone Fan Motor M3 turns at full speed.
- Approx. 500ms → Ozone Fan Motor M3 turns at half speed.
- Approx. Is → Heat Roller
- Scanner Home Position Sensor PC11
  *Scanner Drive Motor M4 is energized to move it to the home position.
- Lens Home Position Sensor PC12
  *Lens Drive Motor M5 is energized to move it to the home position.
- Starter set sequence and ATDC automatic adjustment (After the warming-up cycle is completed)
  *Only when the Imaging Unit is new.
  Fuse is blown when the starter setup sequence is normally terminated.

B Fusing Unit temperature is detected at 200°C.

Fusing Thermistor THI detects 200°C.

- Heat Rollers
  *Fusing temperature control starts.

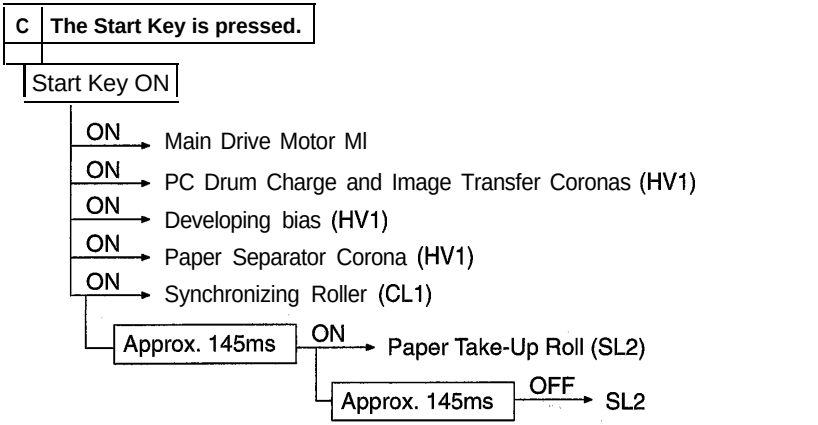
C
The Start Key is pressed.
Start Key ON
ON
Main Drive Motor Ml
ON
PC Drum Charge and Image Transfer Coronas (HV1)
ON
Developing bias (HV1)
ON
Paper Separator Corona (HV1)
ON
Synchronizing Roller (CL1)
Approx. 145ms
ON
Paper Take-Up Roll (SL2)
Approx. 145ms
OFF
SL2

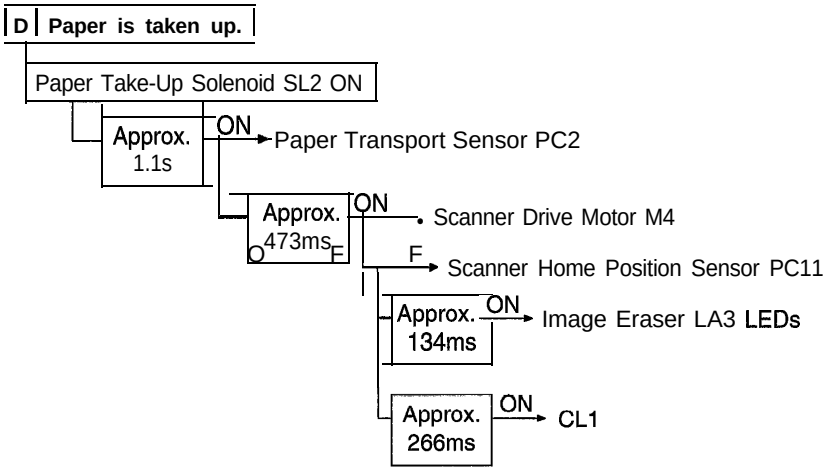
D
Paper is taken up.
Paper Take-Up Solenoid SL2 ON
Approx. 1.1s
ON
Paper Transport Sensor PC2
Approx. 473ms
ON
Scanner Drive Motor M4
F
Scanner Home Position Sensor PC11
Approx. 134ms
ON
Image Eraser LA3 LEDs
Approx. 266ms
ON
CL1

E **The Scanner completes the scan motion.**

Scanner starts the return motor

- Approx. 0.9 — ON → Scanner Home Position Sensor PC11
- OFF → Exposure Lamp LA1

F **The last paper moves past Paper Transport Sensor PC2.**

Paper Transport Sensor PC2 OFF

- Approx. — OFF → PC Drum Charge and Image Transfer Coronas (HV1)
- Approx. 2s — ON → Paper Exit Sensor PC3

G **Paper moves past Paper Exit Sensor PC3.**

Paper Exit Sensor PC3

- Approx. 350ms — OFF → Main Drive Motor M1
- OFF → PC Drum Charge

1151SBM0500A

5 PC DRUM

The photoconductive drum used in this copier is the organic photoconductor (OPC) type. The drum is made up of two distinct, semiconductive materials on an aluminum alloy base. The outer of the two layers is called the Charge Transport Layer (CTL), while the inner layer is called the Charge Generating Layer (CGL).

The PC Drum has its grounding point inside at its rear end. When the Imaging Unit is installed in the copier, the shaft on which the PC Drum Drive Coupling Gear is mounted contacts this grounding point.

Handling Precautions

This photoconductor exhibits greatest light fatigue after being exposed to light over an extended period of time. It must therefore be protected from light by a clean, soft cloth whenever the Imaging Unit has been removed from the copier. Further, use utmost care when handling the PC Drum to prevent it from being contaminated.

PC Drum Cross-Sectional View

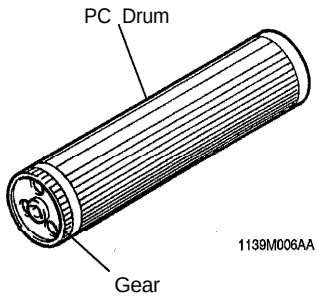

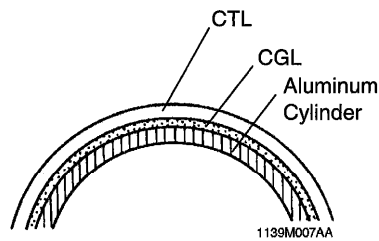

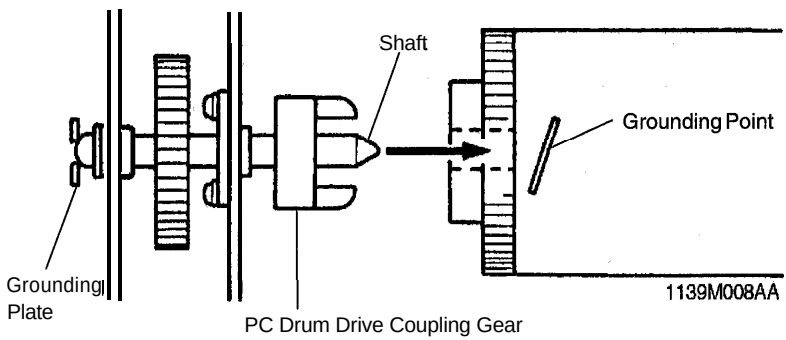

6 IMAGING UNIT

This copier is equipped with an Imaging Unit, or IU, which integrates a PC Drum, PC Drum Charge Corona, Developing Unit, Cleaning Unit, and Toner Recycling mechanism into one assembly. The Unit also includes the Upper Synchronizing Roller which facilitates clearing of a paper misfeed.

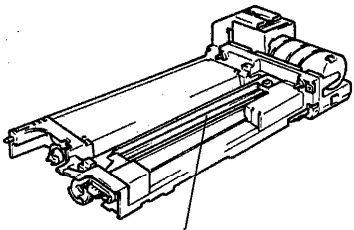

1159M043AA

PC Drum Charge Corona

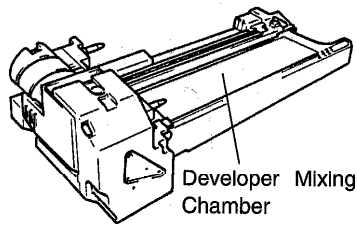

1159M044AA

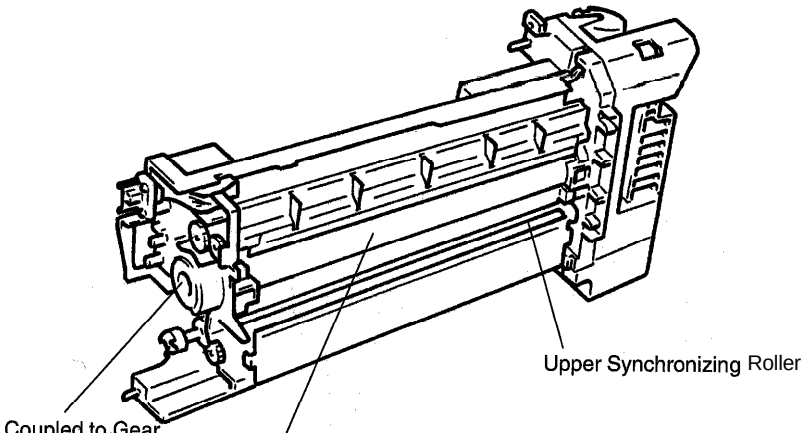

1159M045AA

1159SBM0601A

6-1. Imaging Unit Drive

Drive for the Imaging Unit is transmitted by one of the gears on the Unit. This particular gear is in mesh with the Imaging Unit Drive Gear in the copier.

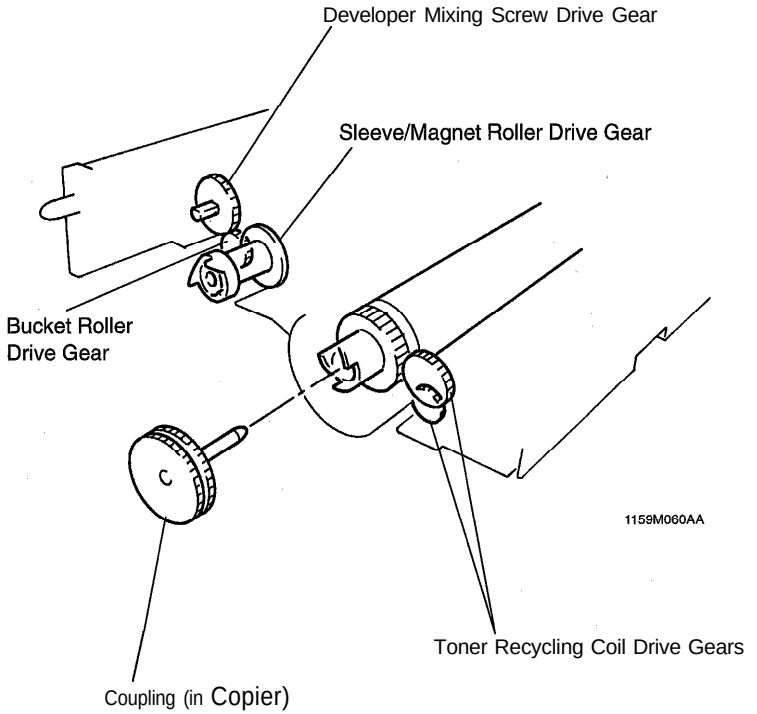

1159SBM0602A

6-2. Toner Recycling

The copier is provided with a toner recycling mechanism. The toner, which has been scraped off the surface of the PC Drum by the Cleaning Blade and collected in the Cleaning Unit, is conveyed by the two Toner Recycling Coils to the Toner Supply Port and, from there, it is returned back to the Developer Mixing Chamber of the Developing Unit.

One of the gears of the Toner Recycling mechanism (1) receives drive through a gear at the rear end of the PC Drum.

The gear on Toner Recycling Coil 1 receives drive through a gear at the rear end of the PC Drum. While, the gear on Toner Recycling Coil 2 receivesdrive through a train of three gears mounted on the mechanism from the Developing Unit to Hopper.

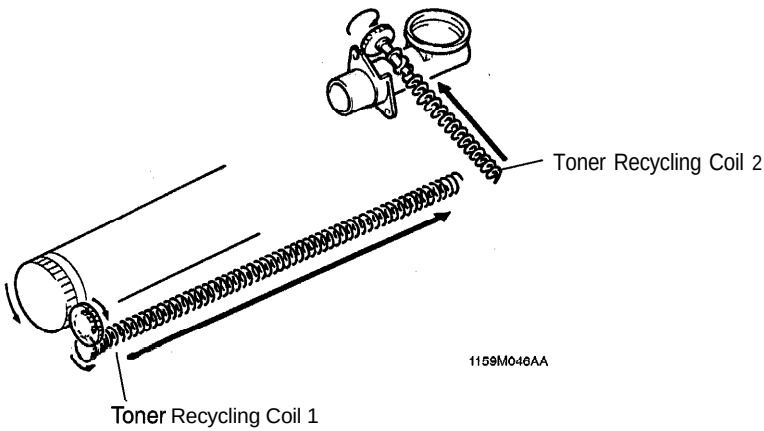

1159SBM0603A

6-3. IU Fuse F1

The Imaging Unit is provided with a fuse called IU Fuse F1. When a new Imaging Unit is installed in the copier and the Power Switch turned ON, an IU Set signal is output causing the copier to start the starter setup sequence and ATDC Sensor automatic adjustment.

When the starter setup sequence is completed normally, an IU Fuse Blow signal is output to blow F1. Once F1 is blown, the IU Set signals are no longer output. This means that the starter setup sequence and ATDC Sensor automatic adjustment will not be carried out when the Power Switch is thereafter turned ON.

	Control Signal	When Fuse is not Blown	When Fuse is Blown	WIRING DIAGRAM
F1	PWB-A PJ1 OA-5	H	L	2-B

1159SBM0700A

7 DEVELOPMENT

The Developing Unit built into the Imaging Unit performs the following functions:

- Mixes the toner and carrier well to ensure that a sufficient amount of toner is positively charged.
- Detects the toner-to-carrier ratio of the developer by means of the ATDC Sensor and replenishes the supply of toner as necessary.
- Detects a toner empty condition by means of the ATDC Sensor.
- Ensures that a proper amount of toner is attracted to the PC Drum by means of its Sleeve/Magnet Roller, Developing Bias, and Doctor Blade.

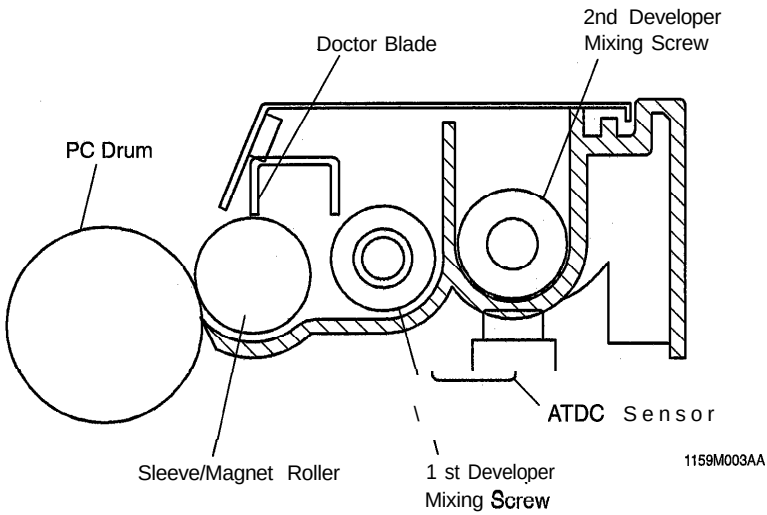

7-1. ATDC Sensor

ATDC Sensor UN3 installed on the underside of the Developer Mixing Chamber detects the varying toner-to-carrier ratio of the developer which flows over it in the Chamber. The copier CPU compares the detected ratio with the ratio set by the ATDC Detection Level Mode (Tech. Rep. Choice SCH-90) to control toner replenishment.

Set T/C (%)	ATDC Output Voltage (V)
4.0	2.65
4.5	2.57
5.0	2.48 (Standard)
5.5	2.40
6.0	2.32
6.5	2.32
7.0	2.15

The Toner Bottle is turned one turn (30 mg) to replenish the supply of toner for each Toner Replenishing signal.

If the toner-to-carrier ratio becomes lower than 2.5%, the copier inhibits the initiation of a new copy cycle (this feature can be enabled or disabled by a Tech. Rep. Choice function). When a ratio of 2.5% or more is recovered as a result of Auxiliary Toner Replenishing, the copier permits the initiation of a new copy cycle.

If the Front Door is swung open and closed with a T/C ratio of less than 4%, the copier initiates an Auxiliary Toner Replenishing sequence. (It stops the sequence as soon as a T/C ratio of 5% is reached.)

ATDC Sensor Automatic Adjustment

An automatic adjustment of the ATDC Sensor is made in the F8 Test Mode operation and when a new Imaging Unit is installed in the copier.

***When a New Imaging Unit is Installed in the Copier:**

Following the execution of the starter setup mode upon power-up, the copier CPU reads the output value of the ATDC Sensor and establishes the reading as the reference value.

***When F8 is Run after Starter Has Been Changed:**

Following the execution of the starter setup mode upon pressing of the Start Key, the copier CPU reads the output value of the ATDC Sensor and establishes the reading as the reference value.

NOTE: If an F8 operation is run at a time when the starter has not been changed, it can result in a wrong T/C reference value *being set by the copier. Avoid casual use of F8.*

If the setting value has been cleared because the RAM Board was replaced, set the value valid before the replacement for the ATDC Sensor adjustment data of the Adjust mode using the 10up/1up key.

Toner Empty Detection

The copier has no toner empty detecting sensor and, instead, the ATDC Sensor performs that function. The toner-empty condition is canceled after detection under any of the following conditions:

- The set T/C ratio has been recovered.
- After the Front Door has been swung open and closed.

(For details, see "9-2. Toner Replenishing Control on p.M-20.)

	Control Signal	Set T/C	Standard Output Voltage	WIRING DIAGRAM
UN3	PWB-A PJ 1 OA-2	4.0%	2.65	2-A
		4.5%	2.57	
		5.0%	2.48	
		5.5%	2.40	
		6.0%	2.32	
		6.5%	2.32	
		7.0%	2.15	

1159SBM0702A

7-2. Magnet Roller

The Magnet Roller of the Sleeve/Magnet Roller of this copier has the following magnetic characteristics,

The Sleeve Roller, onto which developer is attracted by the magnetic fields of force set up by the poles of the Magnet Roller, turns to convey the developer toward the point of development. It also means that developer fresh from the Developer Mixing Chamber is always brought to the point of development.

As we noted earlier, the Imaging Unit integrates the Developing Unit with the PC Drum into one body. Because of that, it is impossible to move the Developing Unit against the PC Drum, thereby providing a certain distance between the PC Drum and Sleeve/Magnet Roller. The Magnet Roller has therefore been made movable: the Bushing is pressed by compression springs thereby pressing the Positioning Collars on both ends of the Magnet Roller against the PC Drum. This ensures a given distance between the PC Drum and the Sleeve/Magnet Roller.

Magnetic Pole Positioning

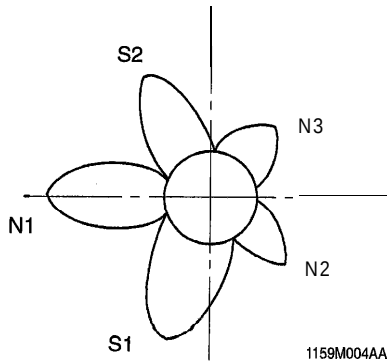

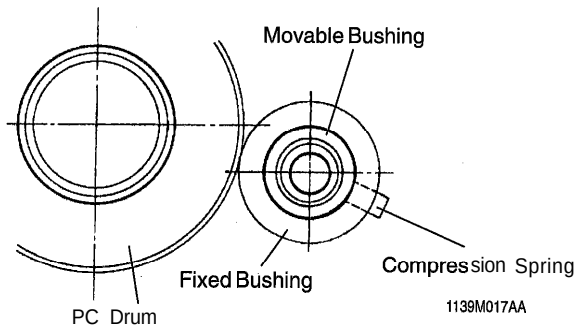

1159SBM0703A

7-3. Developing Bias

A negative voltage (Vb = Developing Bias voltage) is applied to the Sleeve Roller to prevent a foggy background on the copy. The amount of toner attracted onto the surface of the PC Drum depends on how much lower the PC Drum surface potential (Vi) is than Vb (i.e., the potential difference).

- When the potential difference is large, a greater amount of toner is attracted.
- When the potential difference is small, a smaller amount of toner is attracted.

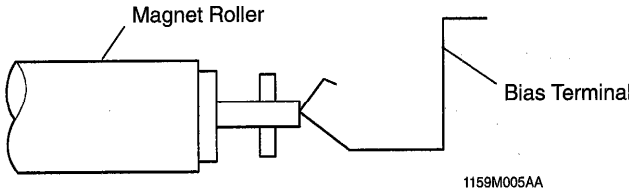

1159M005AA

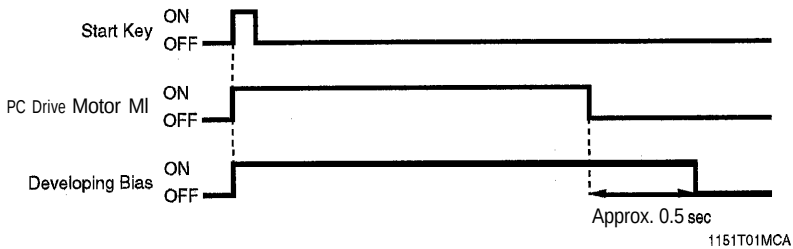

1151T01MCA

	Control Signal	ON	OFF	WIRING DIAGRAM
Developing Bias	PWB-A PJ8A-4	L	H	12-F

1159SBM0704A

7-4. Doctor Blade

The Doctor Blade installed over the Sleeve/Magnet Roller regulates the height of the developer brush on the surface of the Sleeve Roller. The Blade is perpendicular to the direction of movement of the Magnet Roller to minimize variations in the distance between the Doctor Blade and Magnet Roller as the Magnet Roller moves.

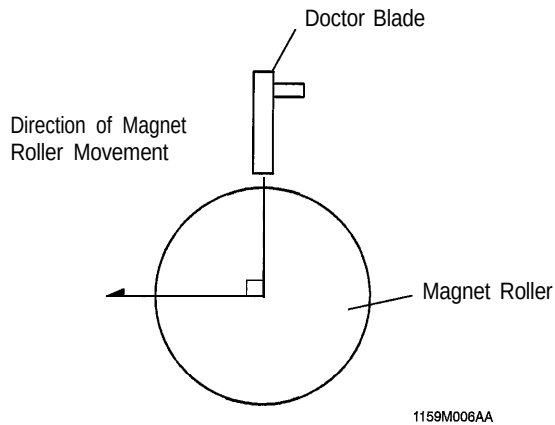

1159SBM0705A

7-5. Magnet Roller Lower Filter

There is a seal installed under the Magnet Roller to prevent insufficiently charged toner from spilling onto the mechanisms inside the copier and toner particles from flying out.

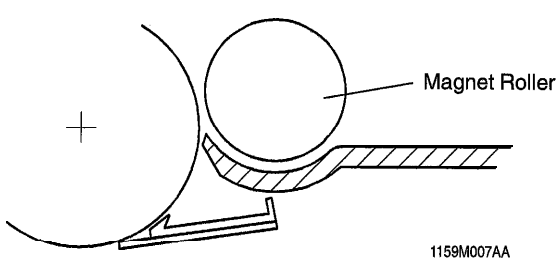

8 CLEANING UNIT

The Cleaning Blade is pressed tightly against the surface of the PC Drum and scrapes off any toner remaining on the surface after image transfer and paper separation have been completed.

The Cleaning Blade is moved back and forth to prevent the PC Drum from deteriorating and the Cleaning Blade from warping away from the surface of the PC Drum.

There is a Toner Antispill Mylar affixed to the Imaging Unit. It prevents toner scraped off the surface of the PC Drum from falling down onto the surface of the copy paper or the paper path.

In addition, a Side Seal is affixed to both ends of the Imaging Unit on both sides of the Cleaning Blade. They prevent toner from spilling from both ends of the Cleaning Blade.

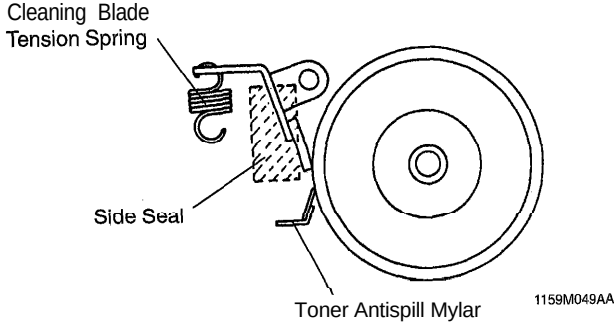

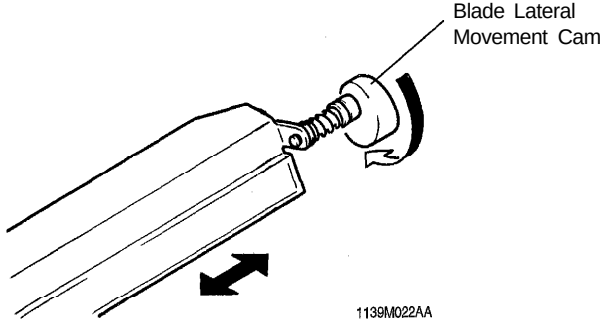

1159SBM0900A

9 TONER HOPPER

The Toner Hopper is integrated into the Imaging Unit. To replace an empty Toner Bottle, the user first needs to swing the Toner Bottle Holder out 20° to the front. The Holder pivots about the Toner Supply Port as it is swung out or in, which effectively prevents toner from spilling when the Holder is swung out or in.

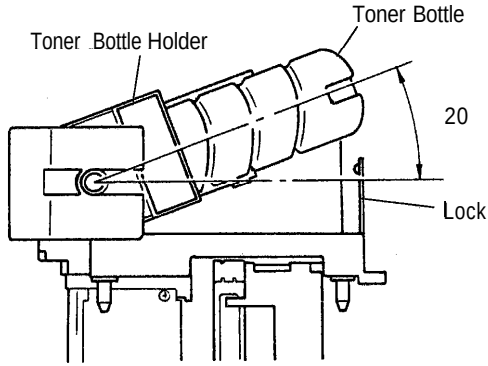

1159M039AA

1159SBM0901A

9-1. Toner Replenishing

Drive from Main Drive Motor M1 is transmitted via the Magnet Roller to the Bottle Drive Gear in the gear box. There is a holder installed on the Bottle Drive Gear, coupling the Toner Bottle to the Bottle Drive Gear. This ensures that the Bottle Drive Gear turns with the Toner Bottle. When Toner Replenishing Solenoid SL1, fitted to the gear box, is energized, it turns the Toner Bottle one complete turn, The spiral groove cut in the Toner Bottle effectively prevents toner from remaining in the bottle.

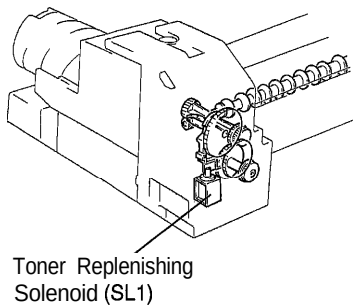

1159M057AA

9-2. Toner Replenishing Control

When Power is Turned ON

- If the toner-to-carrier ratio (T/C) data stored in memory when power was last turned OFF is "less than –1%" of the set level, the copier is set into the auxiliary toner replenishing sequence after it has completed warming up.

During a Copy Cycle

- The copier detects T/C at the start of exposure for each copy cycle and, if the reading is lower than the set level, it replenishes the supply of the amount of toner equivalent to one complete turn of the Toner Bottle, (1 St-stage replenishing).
- When the copier goes through 1st-stage replenishing four times, it replenishes the supply of the amount of toner equivalent to three complete turns of the Toner Bottle (2nd-stage replenishing).
- After carrying out 2nd-stage replenishing five times, the copiertakes a reading of the T/C ratio. If the reading is less than -1% of the set level, the copier is set into the auxiliary toner replenishing sequence. (Auxiliary toner replenishing = Two turns of Toner bottle x max. 10 times)
- If the T/C reading is less than -1% of the set level after the auxiliary tonereplenishing sequence, it results in a toner-empty condition.

10 DRUM CHARGING

The PC Drum Charge Corona has a Scorotron grid to deposit a negative DC charge evenly across the surface of the PC Drum. The grid voltage (VG) applied to the grid mesh is -59OV ±20V.

The Corona Unit has a Comb Electrode which minimizes the amount of ozone produced. The conventional wire type corona unit produces a large amount of ozone due to corona discharge in radial directions. The comb electrode type, on the other hand, discharges only toward the Grid Mesh, meaning a reduced amount of ozone is produced.

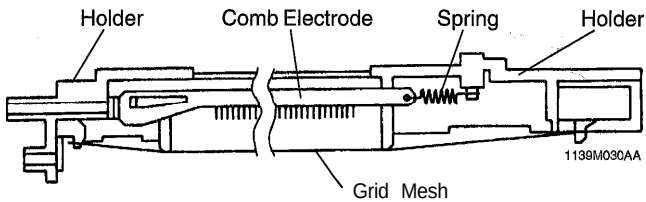

<Normal Mode>

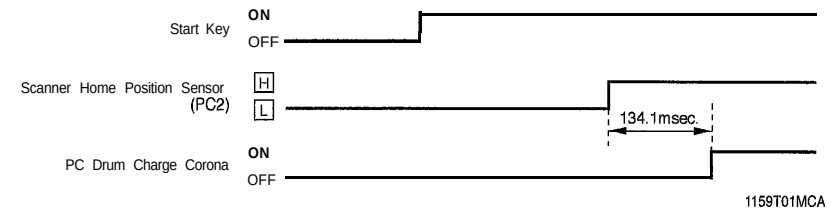

<SDH Mode>

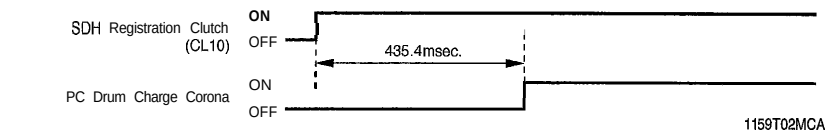

	Control Signal	ON	OFF	WIRING DIAGRAM
PC Drum Charge Corona	PWB-A PJ8A-4	L	H	12-F

	Control Signal	WIRING DIAGRAM
Grid Voltage (VG)	PWB-A PJ8A-3	12-F

11 IMAGE ERASE LAMP (EP1031/EP1031F only)

To prevent a black band from occurring across both the leading and trailing edges, and along the front and rear edges, of the electrostatic latent image, LEDs of Image Erase Lamp LA3 are turned ON before development takes place, thereby reducing to a minimum the unnecessary potential on the surface of the PC Drum.
Because of the light path involved, this copier has this edge erasing cycle between drum charging and exposure.

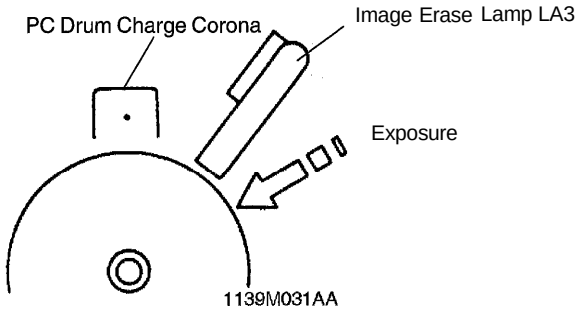

- Image Eraser LEDs are turned ON and OFF according to the zoom ratio.

Zoom Ratio	□	□	□		□	□	□
×0.95 ~	OFF	OFF	OFF		OFF	OFF	OFF
×0.87 ~ x0.94	ON	OFF	OFF		OFF	OFF	ON
x0.75 ~ x0.86	ON	ON	OFF		OFF	ON	ON
×0.64 ~ ×0.74	ON	ON	ON		ON	ON	ON

	Control Signal	ON	OFF	WIRING DIAGRAM
LA3	PWB-A PJ18A-1~4	L	H	2-c

12 OPTICAL SECTION

As the Scanner is moved by Scanner Motor M5, the light from Exposure Lamp LA1 is reflected off the original and guided through the Six Mirrors onto the surface of the PC Drum to form the electrostatic latent image.

The image is enlarged or reduced as necessary by moving the Lens and mirrors (EP1031/EP1031F only).

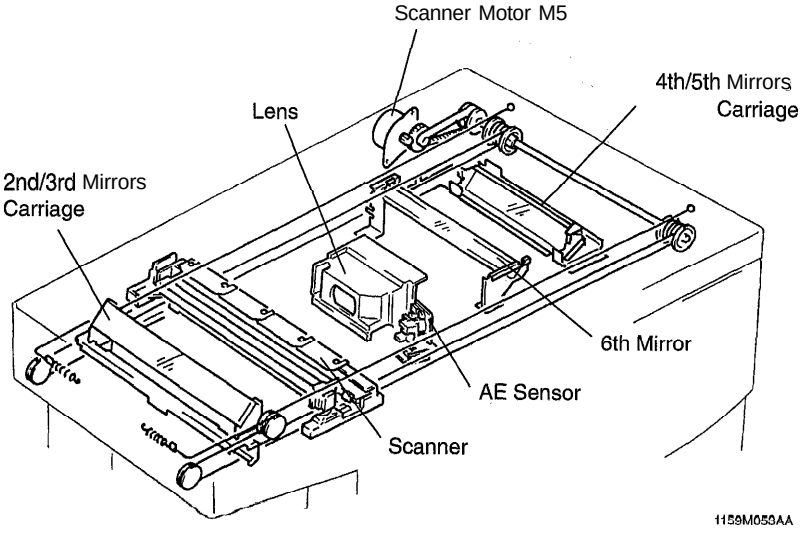

12-1. Exposure Lamp LA1

An AC halogen lamp is used as Exposure Lamp LA1.

As the exposure level is adjusted on the control panel, the delay time from the zero-cross signal of the AVR Trigger signal from PWB-A changes to increase or decrease the LA1 voltage, thereby changing the image density.

Manual EXP Setting	9	8	7	6	5	4	3	2	1
Lamp Voltage Difference (V)	-8	-5	-3	-1	Reference	+1	+3	+5	+8

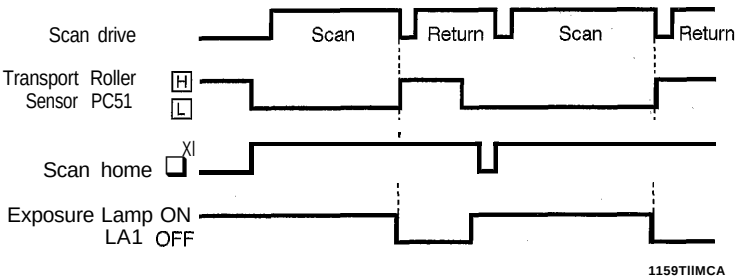

	Control Signal	ON	OFF	WIRING DIAGRAM
AVR Trigger Signal (LA1)	PWB-A PJ7A-5	L	H	7-B

12-2. AE Sensor

In the Auto Exposure Mode, the AE Sensor on AE Sensor Board PWB-H measures the intensity of the light reflected off the original, which results in the black/white ratio of a 210-mm-wide area from the reference position of the original being measured, According to this measurement, the Exposure Lamp voltage is automatically increased or decreased so that copies of consistent quality are produced.

The output from the AE Sensor is applied to PWB-A which, in turn, varies the delay time from the zero-cross signal of the AVR Trigger signal from it to vary accordingly the LA1 voltage.

Original Density (B/W Ratio)	High	Low
Intensitv of Reflected Liaht	Low	High
PWB-H Output	High	Low
AVR **Delay**	Shorter	Longer
LA1 Voltaae	Increased	Decreased

	Control Signal	**ON**	**OFF**	**WIRING DIAGRAM**
PWB-H (AE Sensor)	PWB-A PJ16A-2	L	H	7-c
AVR Trigger Signal (LA1)	PWB-A PJ7A-5	L	H	7-B

1159SBM1203A

12-3. Lamp Reflectors

The Main Reflector ensures that light from Exposure Lamp LA1 exposes all areas of the original. The Auxiliary Reflector functions to reflect light onto the areas that LA1 cannot illuminate when an original that does not lie flat on the Original Glass (such as a book) is being used. This reduces shadows which would otherwise be transferred to the copy.

The Main Reflector is of aluminum, while the Auxiliary Reflector is aluminum to which film has been deposited. In addition, reflectors of the same material as the Main Reflector are installed on both ends of the frame to compensate for the reduced intensity of light around both ends of the Exposure Lamp.

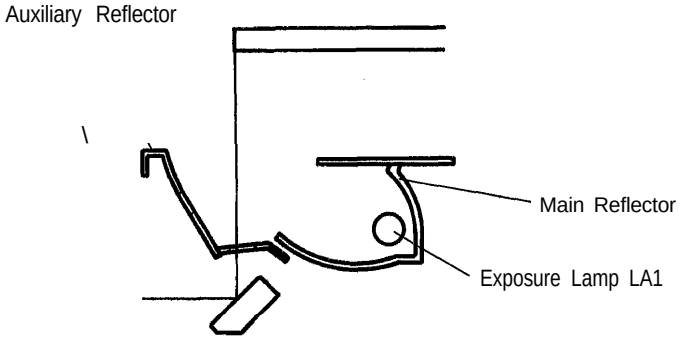

1151M021AA

1151SBM1204A

12-4. Aperture Plates

Four Aperture Plates are moved to the front and rear to ensure even light distribution.

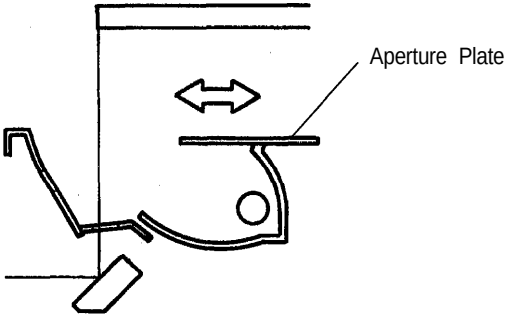

1151M020AA

1159SBM1205A

12-5. Scanner and 2nd/3rd Mirror Carriage Movement

- Scanner Drive Motor M4, a stepping motor, drives the Scanner Drive Cables fitted at the front and rear of the copier to move the Scanner and Mirrors Carriage.
- The speed of the Scanner varies for different zoom ratios (EP1031/EP1031F only).
- Scanner Home Position Sensor PC11 detects the Scanner at its home position. If the Scanner is not at the home position when the copier is turned ON, M4 is energized to move the Scanner to the home position.

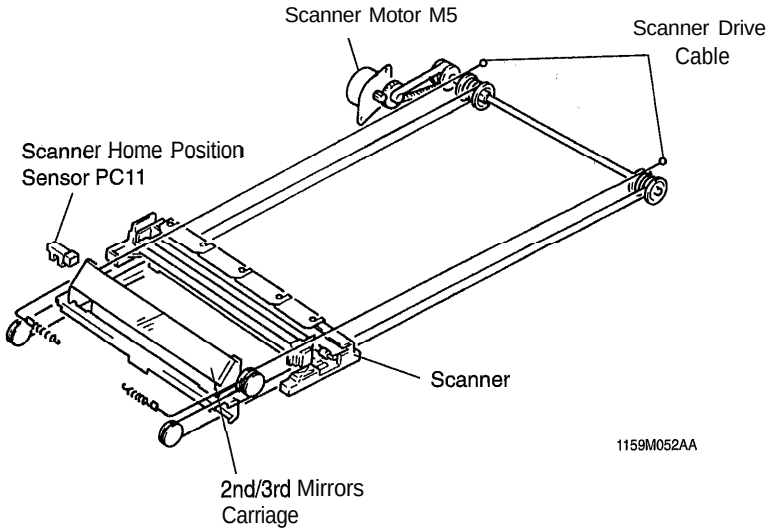

The Scanner starts its scan motion when the Start key is pressed. When the copier is turned ON, it does not know where the Scanner is located and so it moves the Scanner up to the point equivalent to 6 pulses towards the paper exit end from Scanner Home Position Sensor PC11. If the Scanner is located beyond PC1 1 towards the exit end, the copier moves the Scanner in the scan direction (to the right of PC11) and, when the Scanner has moved for several pulses, the copier brings the Scanner back to the point equivalent to 6 pulses to the left of **PC11 .** When the Start key is pressed, the copier moves the Scanner at a low speed until it blocks PC1 1. Then, phase-shifted motor drive pulses (1, 2, 4, and 5 of PWB-11 A) are applied to M4 to accelerate the Scanner. The speed of the Scanner is changed by varying the width of the pulse applied to the motor (EP1031, EP1031 F only).

	Control Signal	Blocked	Unblocked	WIRING DIAGRAM
PC11	PWB-A PJ16A-5	L	H	5-D

SDH Mode

When the Start key is pressed, the copier moves the Scanner up to a point equivalent to 43 pulses to the left (paper exit end) of **PC11 .**

1159SBM1206A

12-6. 4th Mirror Movement (EP1031/EP1031 F only)

- The 4th Mirror is moved to the right and left as the eccentric cam located on the bottom of Lens Drive Motor M5 is turned. It is moved to vary the conjugate distance for each zoom ratio selected for use.

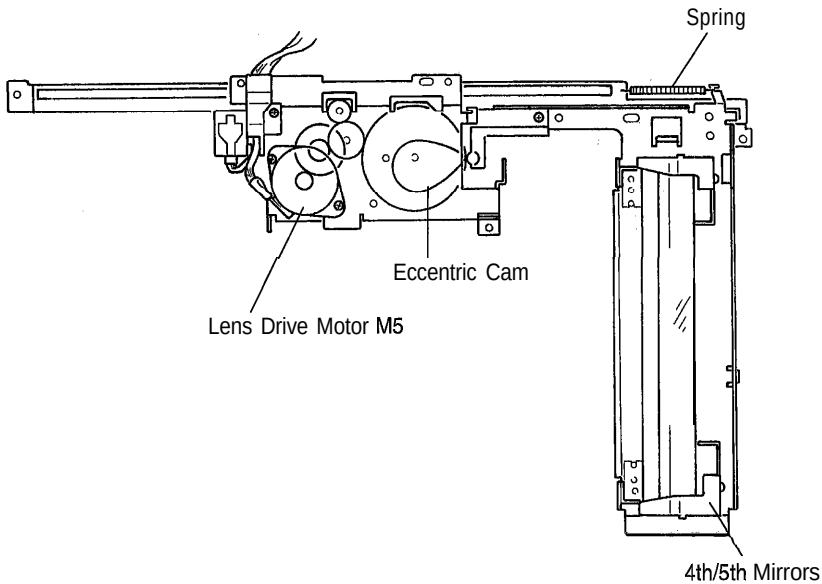

1159M051AA

	Control Signal	Energized	Deenergized	WIRING DIAGRAM
M5	PWB-A PJ16A-2	L	H	7-D

1159SBM1207A

12-7. Lens Movement (EP1031/EP1031 F only)

Lens Drive Motor M5, a stepping motor, is energized by the motor drive pulses sent from PWB-A to move the Lens a given distance via a gear train. There is a fixed-type Lens Aperture Cover provided at the rear of the Lens (on the 4th Mirror end). It limits the amount of light striking the surface of the PC Drum.

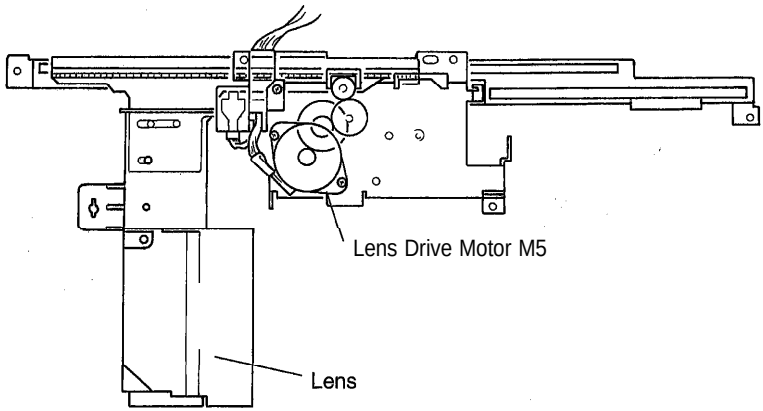

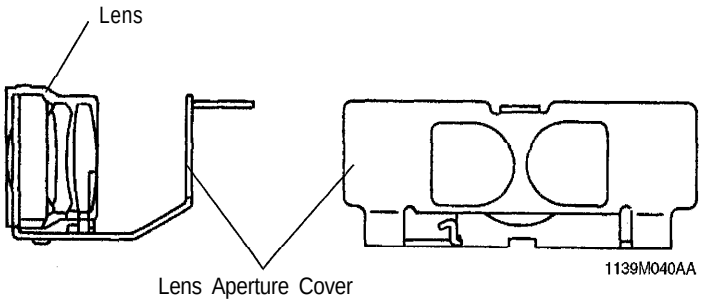

	Control Signal	Blocked	Unblocked	WIRING DIAGRAM
PC12	PWB-A PJ17A-2	L	H	5-D

1159SBM1300A

13 MAIN ERASE LAMP

Main Erase Lamp LA2 is turned ON to neutralize any surface potential remaining on the surface of the PC Drum after cleaning.

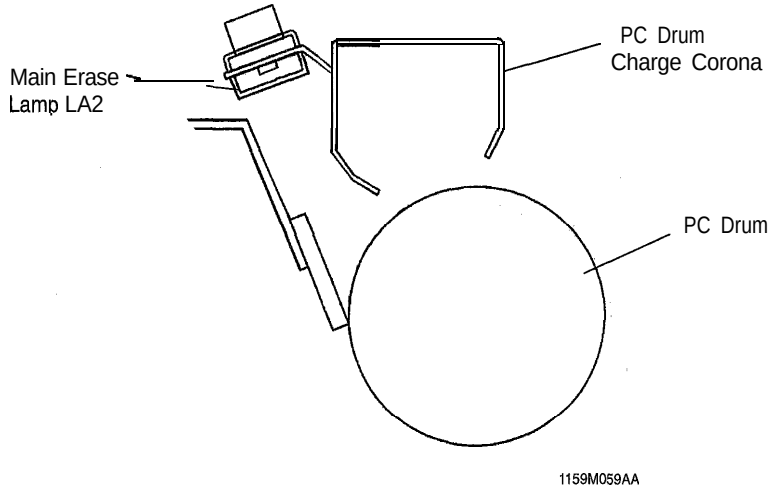

1159M059AA

The Main Erase Lamp is not a single lamp. A total of 40 LEDs are mounted on a board to make up LA2. The LA2 board is fitted with an acrylic cover to protect the LEDs from contamination.

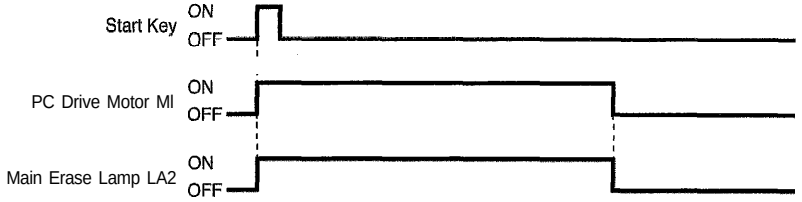

1151T06MCB

	Control Signal	ON	OFF	WIRING DIAGRAM
LA2	PWB-A	H	L	2-B

14 IMAGE TRANSFER AND PAPER SEPARATION

Image Transfer

The Image Transfer Corona applies a DC negative corona emission to the underside of the paper thereby attracting the positively charged toner onto the surface of the paper, The Image Transfer Guide Plate installed before the Image Transfer Corona restricts the entry angle of the paper to the PC Drum and, at the same time, ensures a given distance of the paper from the PC Drum so that the image is properly transferred onto the paper.

Paper Separation

This copier employs a natural paper separation method which owes its paper separating efficiency to the inherent strength in the paper and the small diameter PC Drum. In addition, a charge neutralizing plate is installed that applies a (+) 600V bias to prevent image noise from occurring due to static electricity discharge occurring at the time of paper separation.

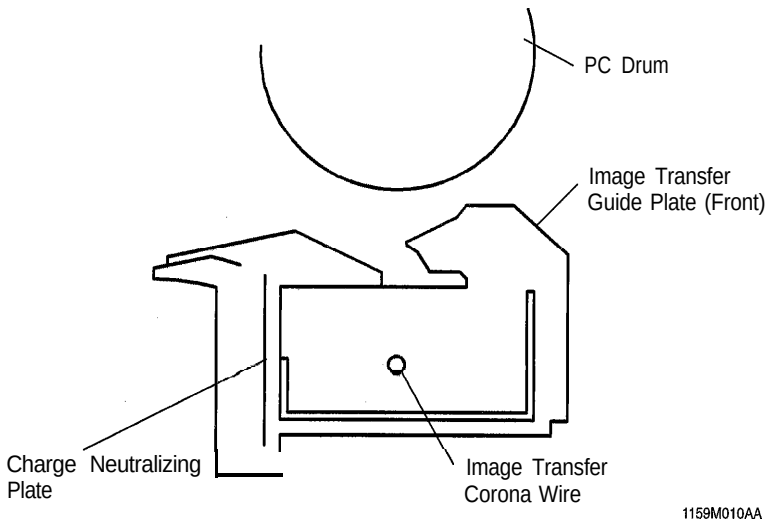

15 PAPER TAKE-UP/FEED SECTION

The copier is equipped with a Universal Tray that is slid out to the front of the copier. It can hold up to 250 sheets of paper.

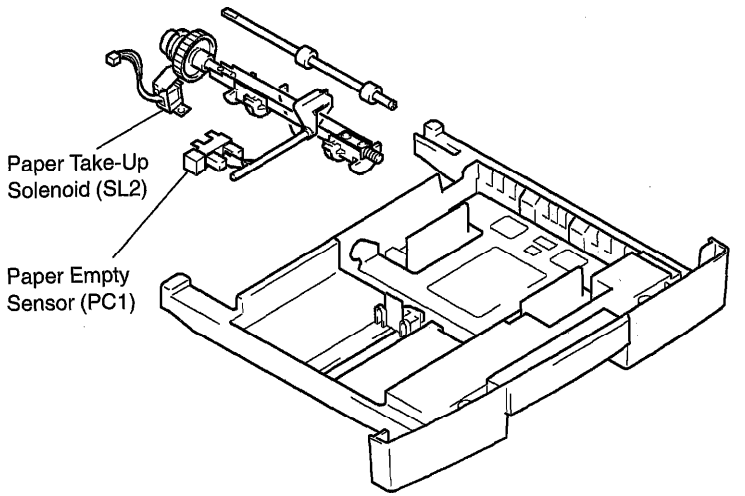

1159M014AA

Paper Sizes That Can be Loaded

<Inch Area>

- 5-1/2" × 8-1/2" ~ 8-1/2" × 14"

<Metric Area>

- A5T ~ A4T

15-I. Edge Guide and Trailing Edge Stop

The Drawer is a universal type allowing the user to slide freely the Edge Guide and Trailing Edge Stop to accommodate paper of different sizes.

The Edge Guide and Trailing Edge Stop can be locked into position by meshing the notches in the Lock Lever with those in the Drawer.

Trailing Edge Stop

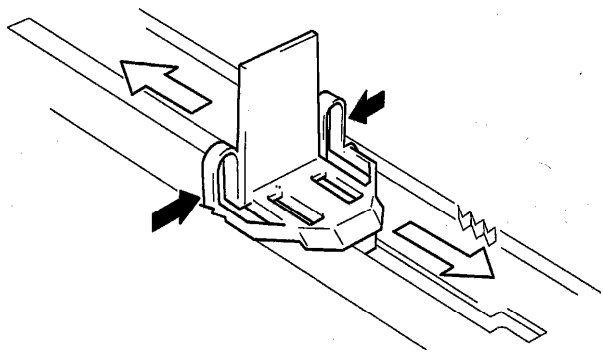

1159M015AA

Edge Guide

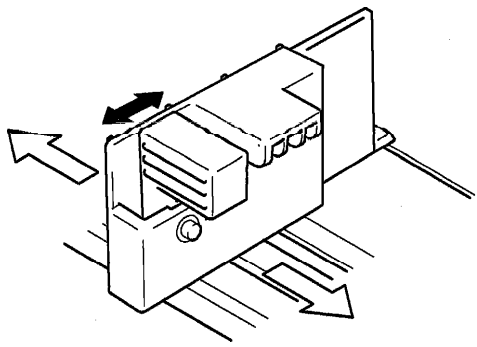

1159M016AA

1159SBM1502A
15-2. Drawer Positioning

The tray is positioned by fitting the slit in its frame into the positioning plate on the paper take-up unit and pressing the side faces on both ends of the tray front cover against the flat surface of the base bracket.
The tabs on both sides at the front of the tray ensure that the tray clicks into position.

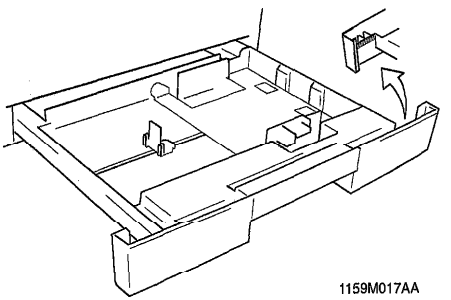

1159M017AA

Rear End

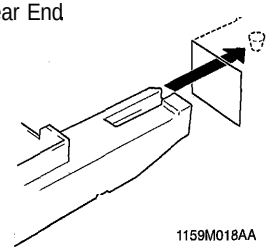

1159M018AA

Front End

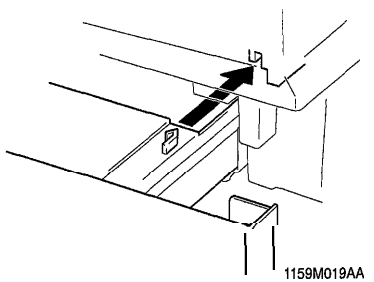

1159M019AA

1159SBM1 503A
15-3. Paper Lifting Plate

When the lock lever installed on the backside of the tray on the papertake-up end moves past the protrusion at the center of the copier rail, it unlocks the lock lever, allowing the two springs to push up the Paper Lifting Plate.

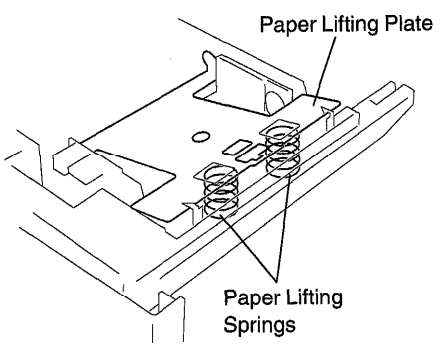

1159M020AA

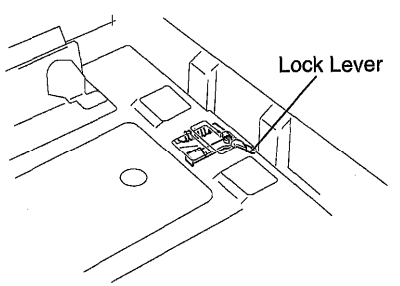

1159M023AA

15-4. Paper Empty Detection

When the Drawer runs out of paper, the Actuator for the Paper Empty Sensor drops into the cutout in the Paper Lifting Plate. This activates the Paper Empty Sensor and the copier will know that the Drawer has run out of paper.

Also, there is a possibility of the Actuator activating the Sensor by flexing of a sheet of paper as it is taken up and fed in. To prevent this false detection of a paper-empty condition, the paper empty detection is enabled only when the Paper Take-Up Roll is in the retracted position. (See 15-6. Paper Take-Up Roll for the retracted position of the Paper Take-Up Roll.)

<Control>

	Control Signal	Blocked	Unblocked	WIRING DIAGRAM
PC1	PWB-A PJ2A-2	L	H	10-F

15-5. Paper Separating Mechanism

The tray has fingers that separate the top sheet of paper from the rest of the paper stack at paper take-up, The Fingers are fitted to the right front and rear corners of the Drawer. When the Paper Take-Up Roll starts turning to take up the top sheet of paper, its turning force is directly transmitted to the top sheet of paper as it is in direct contact with the Paper Take-Up Roll. That force overcomes the block of the Fingers, causing the top sheet of paper to ride over the Fingers and be fed out of the Drawer into the copier.

As to the second sheet of paper, the paper transport force obtained through friction with the top sheet of paper is weak and does not allow the second sheet of paper to ride over the block of the Fingers. Hence, the second sheet of paper remains stationary with the rest of the paper stack in the Drawer.

When there are only two sheets of paper left in the Drawer, the bottom sheet can be fed with the top one if the friction of the Paper Lifting Plate is weak. The Friction Plate affixed to the Paper Lifting Plate prevents this from happening.

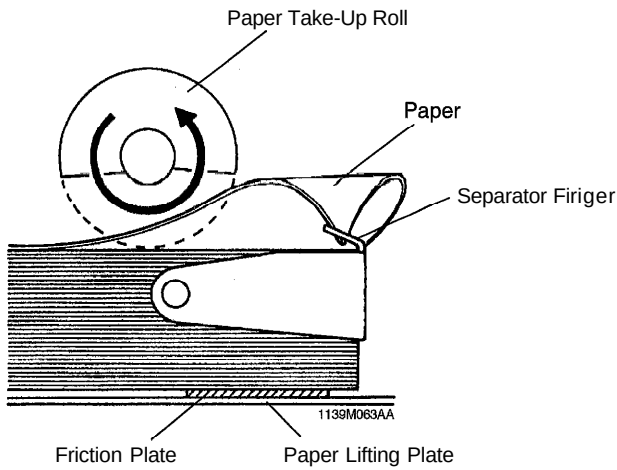

15-6. Paper Take-Up Roll

Since the Paper Lifting Plate is raised at all times by the Paper Lifting Springs, paper is wedged in the mechanism when the Drawer is slid out of the copier if the Paper Take-Up Roll is round in shape. So the Take-Up Roll is semicircular and the circular part of the Roll is positioned on top at times other than take-up. For convenience, we call this position of the Paper Take-Up Roll the retracted position.

The Paper Take-Up Roll is grooved to keep good friction even under heavy loading.

The Paper Take-Up Roll is driven when the Paper Take-Up Solenoid (SL2) is energized. The Roll is turned one complete turn for each single sheet of paper.

The Paper Transport Sensor (PC2) is used to detect whether a sheet of paper has been properly taken up or not.

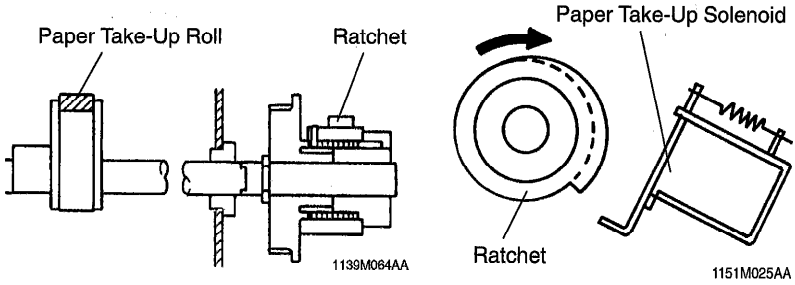

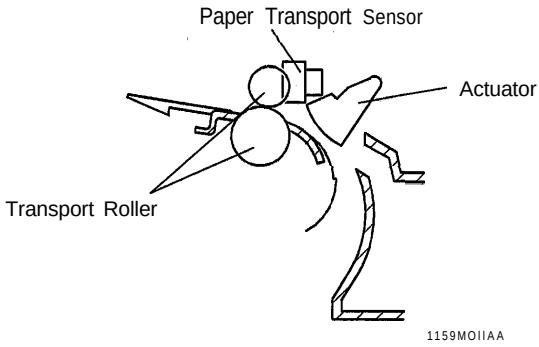

1159SBM1507A

15-7. Paper Take-Up Retry Control

To minimize the occurrence of a paper misfeed due to a slippery Paper Take-Up Roll, the Paper Take-Up Solenoid is energized a second time if a sheet of paper fails to reach the Paper Take-Up Detecting Sensor within T_1 sec. after the solenoid has been deenergized. The solenoid is energized a second time 0.36 sec. after the above-mentioned period of 0.95 sec. has elapsed. (This is referred to as the paper take-up retry function.)

A misfeed results if the sheet of paper does not reach the Paper Take-Up Detecting Sensor even after three paper take-up sequences.

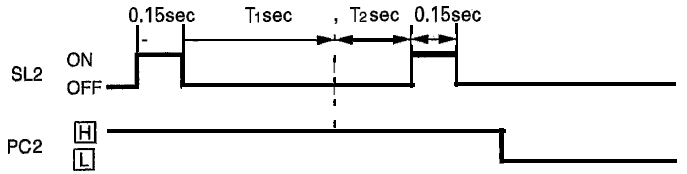

1159T07MCA

(Sec)

	T_1	T_2
Trav	0.95	0.36
Multi Bypass Table	0.29	0.22

16 VERTICAL PAPER TRANSPORT

The sheet of paper taken up by the Paper Take-Up Roll from the tray is fed along the paper guide to the Transport Rollers.

The Transport Rollers receive drive from Main Drive Motor Ml, turning at all times whenever Ml remains energized.

Paper Transport Sensor PC2 located at the Transport Rollers detects a sheet of paper taken up and fed in from the tray or Multi Bypass Table.

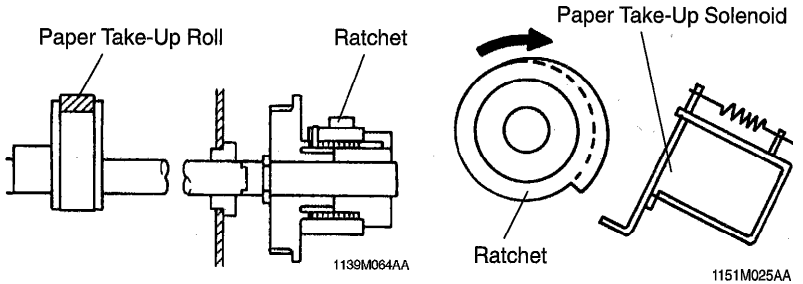

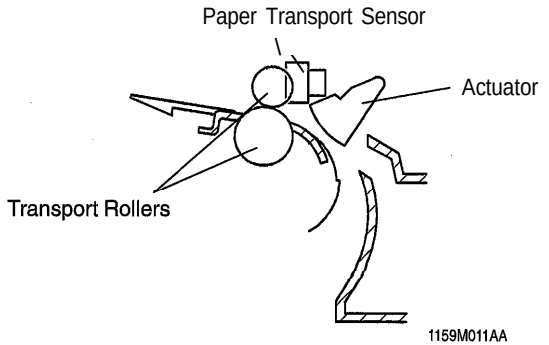

<Control>

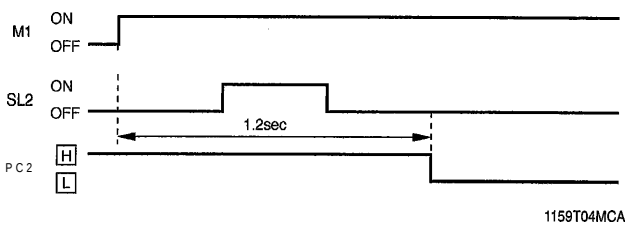

	Control Signal	Energized	Deenergized	WIRING DIAGRAM
M1	PWB-A PJ4A-4	L	H	2-I
SL2	PWB-A PJ6A-2	L	H	10-E
	Control Signal	**Blocked**	**Unblocked**	**WIRING DIAGRAM**
PC2	PWB-A PJ3A-2	L	H	2-D

17 SYNCHRONIZING ROLLERS

The Synchronizing Rollers, operating in phase with the Scanner scan motion and paper feeding, synchronize the leading edge of the copy paper accurately with the leading edge of the toner image on the PC Drum.

The Upper Synchronizing Roller is a metal roller covered with a polyvinyl chloride tubing, while the Lower one is a rubber roller.

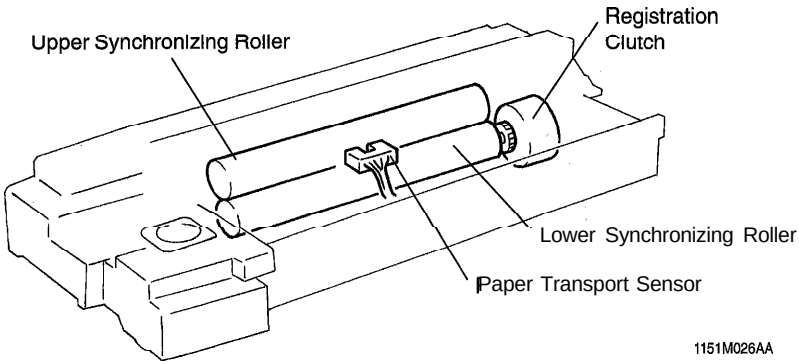

To facilitate clearing of misfeeds, the Upper Synchronizing Roller is installed in the Imaging Unit. It is fitted to the Guide Frame of the Imaging Unit and the Compression Springs at the front and rear ends press the Roller downward so that it makes contact with the Lower Synchronizing Roller. The Lower Roller is driven by the drive source a gear train transmits the rotation of the Lower Roller to the Upper Roller, thus ensuring good paper transport performance.

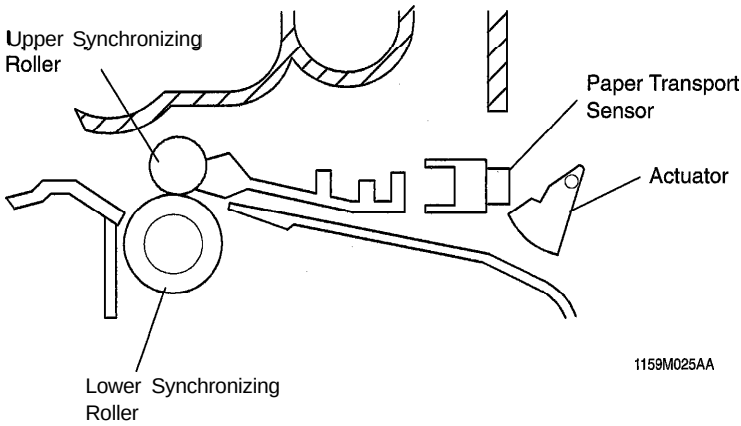

1159SBM1701A

17-I. Upper Synchronizing Roller Positioning

Since the Upper Synchronizing Roller is fitted to the Imaging Unit, it must be correctly positioned with reference to the Lower Synchronizing Roller when the Upper Half of the copier is swung down into the locked position. For this purpose, slits are cut in the lower copier frame and the Bushings of the Upper Synchronizing Roller fit into these slits.

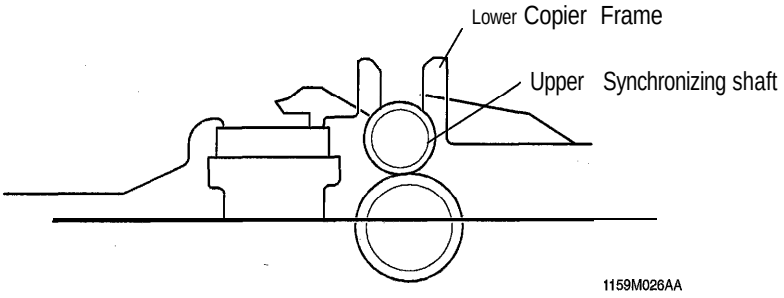

1159SBM1702A

17-2, Paper Dust Remover

The Paper Dust Remover is installed so that it makes contact with the Upper Synchronizing Roller, Since the Upper Synchronizing Roller is covered with a vinyl tubing, triboelectric charging occurs as the Rollerturns in contact with the Paper Dust Remover. As paper is then fed between the Synchronizing Rollers, the charges on the tubing attract paper dust from the paper. The dust is then transferred onto the Paper Dust Remover.

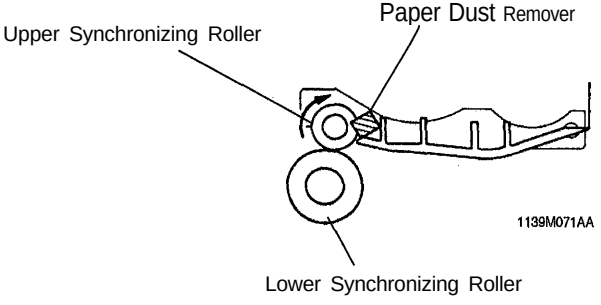

1159SBM1703A

17-3. Synchronizing Roller Control

The Synchronizing Rollers are started as Registration Clutch CL1 is energized upon reception of an Image Leading Edge signal from PWB-A.

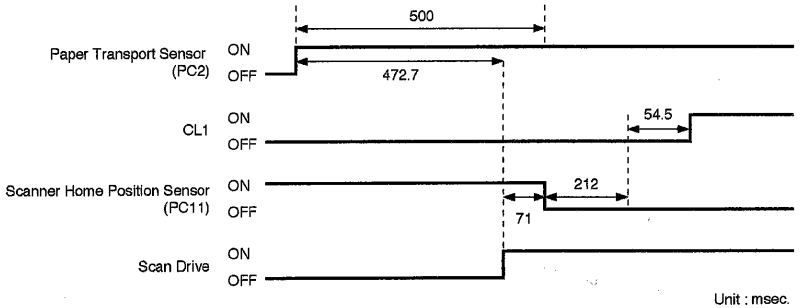

	Control Signal	Energized	Deenergized	WIRING DIAGRAM
CL1	PWB-A PJ7A-13	L	H	2-D

	Control Signal	Blocked	Unblocked	WIRING DIAGRAM
PC2	PWB-A PJ3A-2	L	H	2-D

18 PAPER TRANSPORT

After having gone through the imagetransferand paperseparation processes, the paper is then transported along the guide plate to the Fusing Unit. There is a resistor provided between the guide plate and frame to prevent void images.

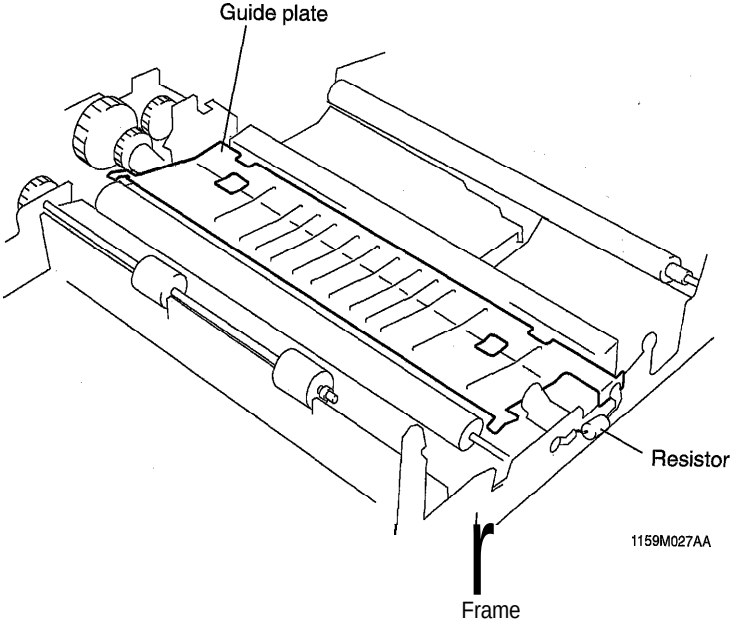

19 FUSING UNIT

The Upper Fusing Roller and Lower Fusing Roller together apply heat and pressure to the toner and paper to permanently fix the developed image to the paper.

Drive for the Upper Fusing Roller is transmitted from the Main Drive Motor to the Upper Fusing Roller Drive Gear. The Lower Fusing Roller is in contact with, and thus driven by, the Upper Fusing Roller.

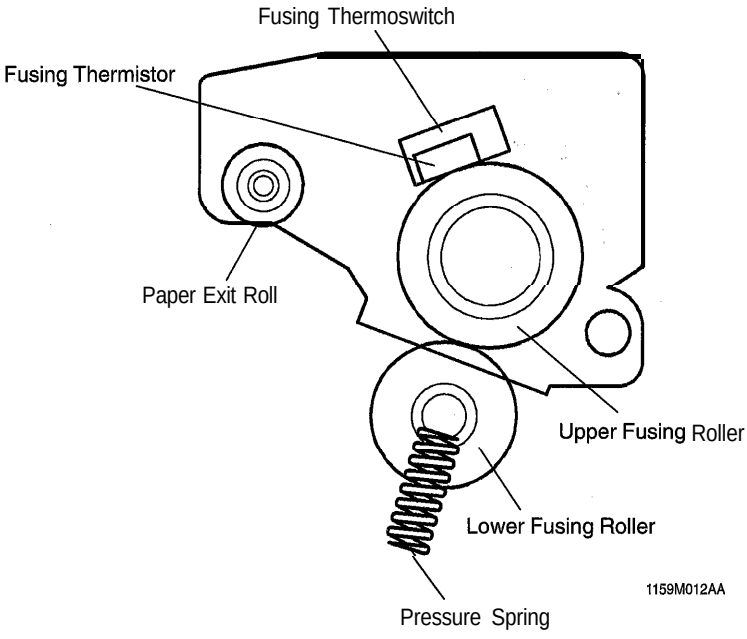

1159SBM1901A

19-1. Fusing Temperature Control

This copier employs a roller packed with heat insulator for the Upper Fusing Roller to shorten warming-up time. Fusing Thermistor TH1 fitted to the Upper Fusing Roller is used to keep an optimum fusing temperature at all times (controlled fusing temperature: 190°C).

In standby : Temperature control at 170° C is provided considering the heating speed by the heater and the time it takes the paper to enter the Fusing Unit.

During a copy cycle : Temperature is controlled at 200° C for the first 2 minute after the start of the copy cycle. If a multi-copy cycle runs over 2 minute, a 190°C control is provided after the 2-min. period.

TH1 is located at a point 20.9 mm to the rear with reference to the paper path reference position, thereby preventing low-temperature offset and insufficient fusing strength that could otherwise occur when small-size paper is fed through.

The Upper Fusing Roller is also provided with Fusing Thermoswitch TS1 that turns OFF to cut off the power line to the Fusing Unit when the roller gets abnormally hot.

Warming-up Time = Within 10 sec.

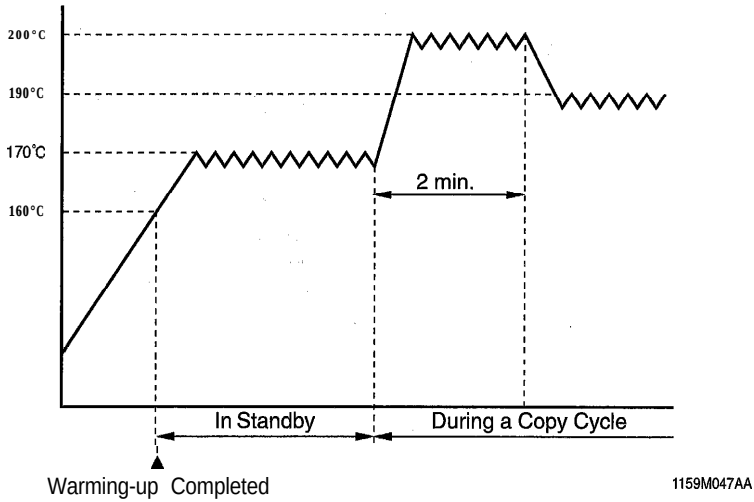

1159SBM1902A

19-2. Fusing Rollers Pressure Mechanism

Pressure Springs are installed at both ends of the Lower Fusing Roller. These springs contact the bearings mounted on both ends of the Lower Fusing Roller and exert pressure through the Lower Fusing Roller to the Upper Fusing Roller which is installed in the Fusing Unit.

The Fusing Unit is divided into an upper and a lower half, and the upper half can be swung open. The Upper Half of the copier, when locked in position, presses the upper half of the Fusing Unit down onto its lower half.

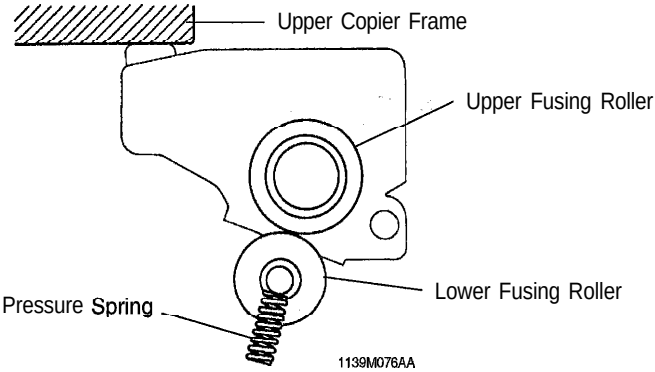

1159SBM2000A

20 EXIT UNIT

The Paper Exit Roller/Rolls feed the paper, to which the developed image has been fixed, out of the Fusing Unit onto the Copy Tray. The Charge Neutralizing Brush touches the surface of the sheet of paper being fed out of the Fusing Unit to neutralize any static charge left on it. The Upper and Lower Separator Fingers strip the paper from the surface of the Upper/Lower Fusing Roller,

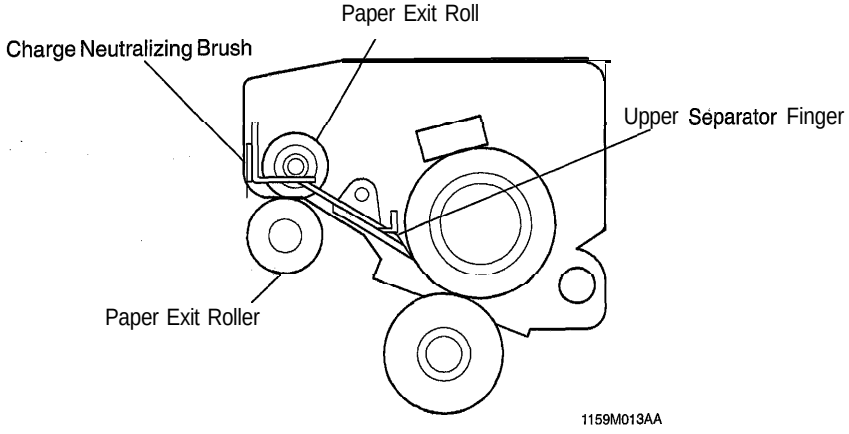

1159SBM2001A

20-I. **Upper/Lower Separator Fingers**

The Upper Fusing Roller is provided with two Separator Fingers which are laid out as shown below.

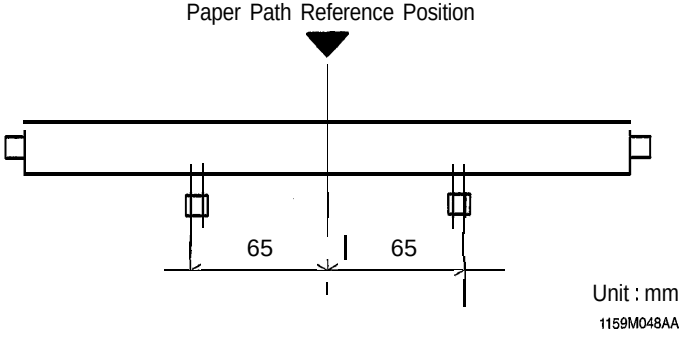

1159SBM2002A

20-2. Paper Exit Sensor

Paper Exit Sensor PC3 is located at the paper exit of the lower half of the copier, detecting the sheet of paper being fed out of the copier.

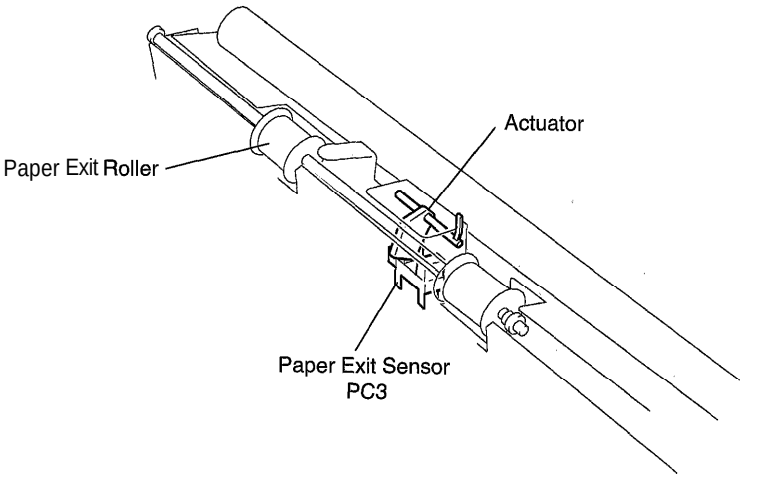

1159M028AA

	I Control Signal	Blocked	Unblocked	WIRING DIAGRAM
PC3	PWB-A PJ7A-10	L	H	2-F

21 MULTI BYPASS TABLE

The optional Multi Bypass Table permits the user to make multiple copies (up to 30) on paper that cannot be fed automatically via any built-in paper drawer of the copier.
*EP1031, EP1031 F only

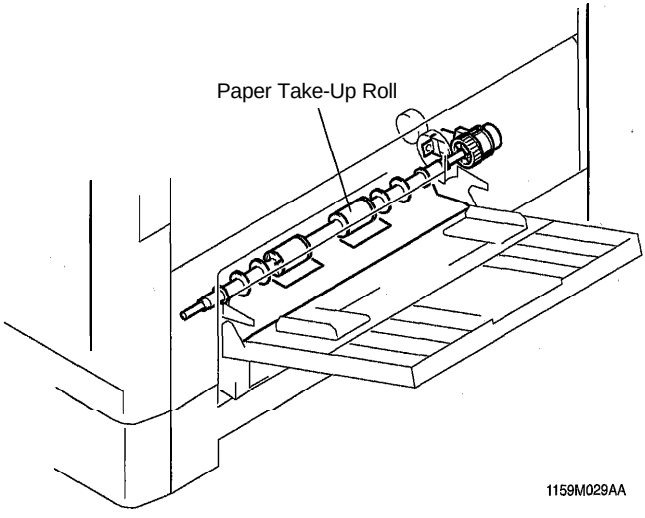

1159SBM2101A

21-1. Paper Take-Up Mechanism

The semi-circular portions of the Paper Take-Up Rolls are in the upper position in the standby state so that the rolls will not hamper proper loading of paper. When the Start key is pressed, Multi Bypass Paper Take-Up Solenoid SL3 is operated to press the Paper Take-Up Rolls against the paper stack for paper take-up.

In Standby

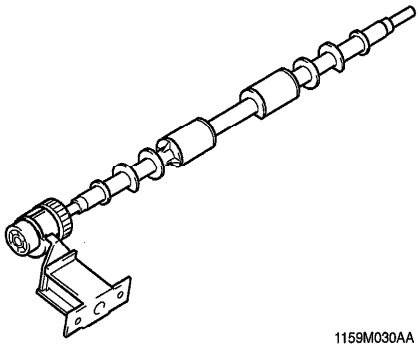

1159M030AA

At Take-Up

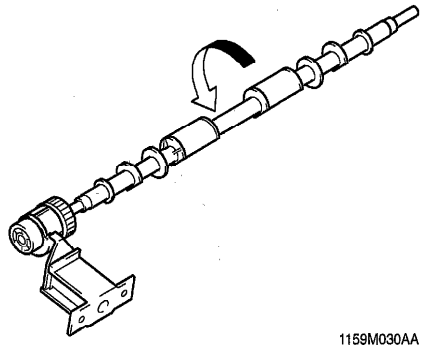

1159M030AA

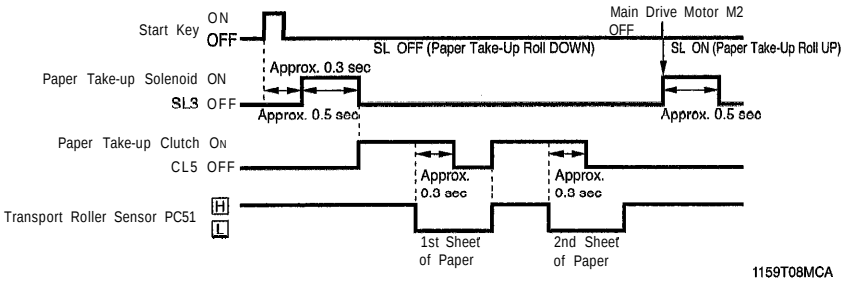

1159T08MCA

	Control Signal	Energized	Deenergized	WIRING DIAGRAM
SL3	PWB-A PJ5A-2	L	H	10-F

1159SBM2102A

21-2. Paper Separating Mechanism

The paper separating mechanism of the Multi Bypass Table uses a Paper Separator Pad affixed to the Multi Bypass Table directly under the Take-up Rolls. It ensures that only the top sheet of paper is fed in by properly separating the second sheet of paper from the top one.

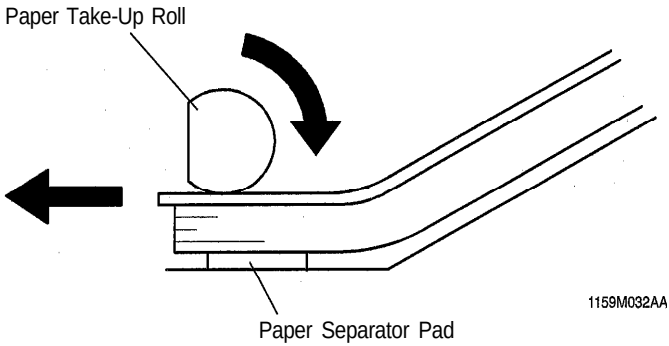

1159SBM2200A

22 COOLING FAN

Ozone produced by the PC Drum Charge Corona is drawn out of the copier by Ozone Fan Motor M3 and absorbed by the Ozone Filter.

M3 is turned either at high or low speed. It turns at low speed in the standby state and at high speed during a copy cycle to cool the inside of the copier.

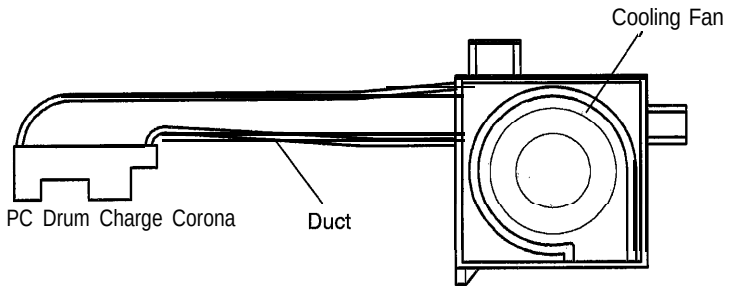

1159M037AA

	Control Signal	Energized	Deenergized		WIRING DIAGRAM
M3	PWB-A	PJ13A-1	H	L	2-E

23 OPTICAL SECTION COOLING FAN

Optical Section Cooling Fan Motor M2 blows outside air against the Original Glass which is heated by Exposure Lamp LA1.

The filter at the intake port of the fan motor prevents dust and dirt from entering the optical section of the copier.

M2 keeps on turning at all times except in the standby state (including when the Power Switch is turned ON).

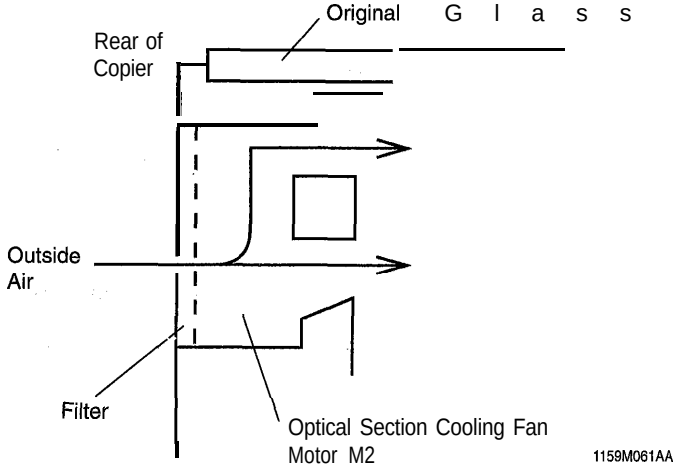

	Control Signal	Energized	Deenergized	WIRING DIAGRAM
M2	PWB-A PJ14A-1	L	H	5-E

EP1030F, EP1031F

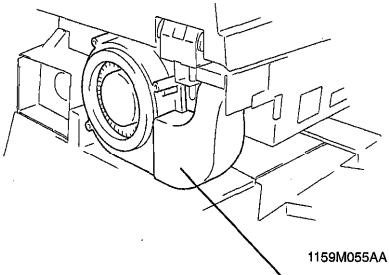

EP1030, EP1031

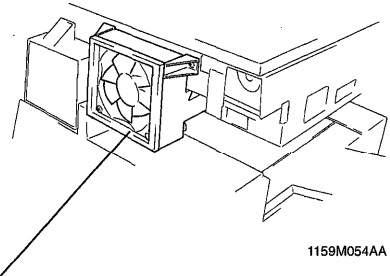

Optical Section Cooling Fan Motor M2

- Up to **50** sheets of A5 lengthwise to A4 lengthwise or 5-1/2" x 8-1/2" to 8-1/2" x 14 (inch areas) can be loaded in the SDH.

1159SBM2401A
24-1. Document Take-Up Mechanism

- The document take-up mechanism takes up the top sheet of a document set placed on the Document Feeding Tray and transports it up to the Registration Roller. The drive for this mechanism comes from SDH Drive Motor Ml 0.

1159SBM2402A
24-2. Document Separating Mechanism

- When two or more sheets of document are taken up by the Document Take-Up Roll, the document separating mechanism prevents the second and subsequent sheets from being fed further into the SDH. It consists of a Feed Roll, Separator Roll, and a torque limiter.
- When only one sheet is taken up, the turning torque of the Feed Roll is transmitted via the paper to the Separator Roll. However, since the stationary torque of the Separator Roll (torque limiter) is greater than the turning torque of the Feed Roll, the Separator Roll is driven by the Feed Roll to feed the paper onward.
- If two sheets are taken up at once, the Separator Roll remains stationary because of the stationary torque of the torque limiter, since the friction coefficient between the top sheet and second sheet is low. This means that the second and subsequent sheets are blocked, while only the top sheet is fed in.

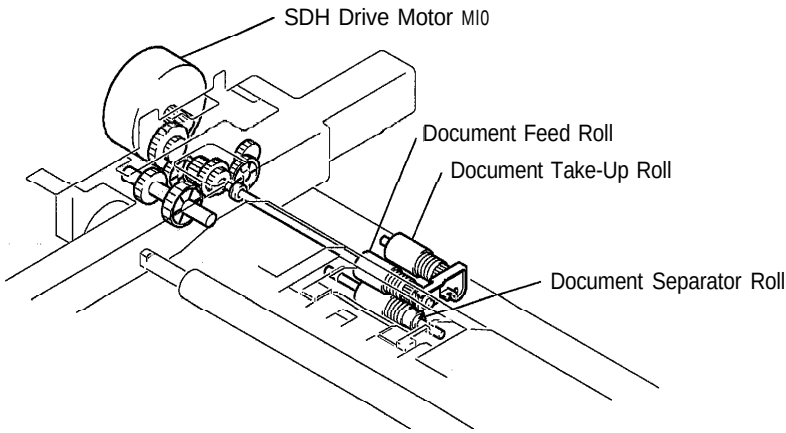

1159M034AA

	Control Signal	Energized	Deenergized	WIRING DIAGRAM
M10	PWB-A PJ1A-8	L	H	9-B

1159SBM2403A

24-3. Document Transport/Exit Mechanism

- The document transport mechanism transports the document, fed from the take-up section up to the Registration Roller, on to the exposure position along the guide plate.
- The document exit mechanism ejects the document transported by the transport mechanism out into the Document Exit Tray.

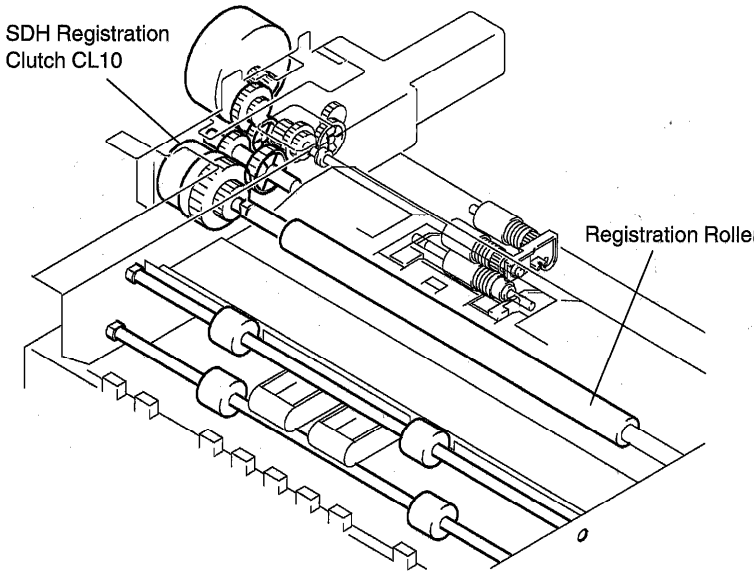

1159M035AA

- The rollers at the transport and exit mechanisms are driven by a gear train from SDH Drive Motor Ml 0, turned when Registration Clutch CL1 0 is energized.

	Control Signal	Energized	Deenergized	WIRING DIAGRAM
CL10	PWB-A PJIA-7	L	H	11-D

1159SBM2404A

24-4. SDH Mode

- When in the SDH mode, the Scanner is moved to, and fixed at, the SDH exposure position and scans the document as the document is transported above the Scanner.

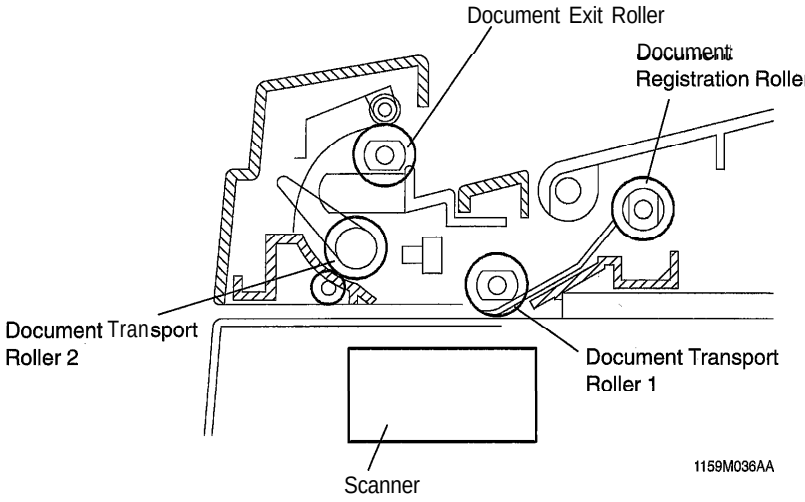

When feeding two sheets of Documents

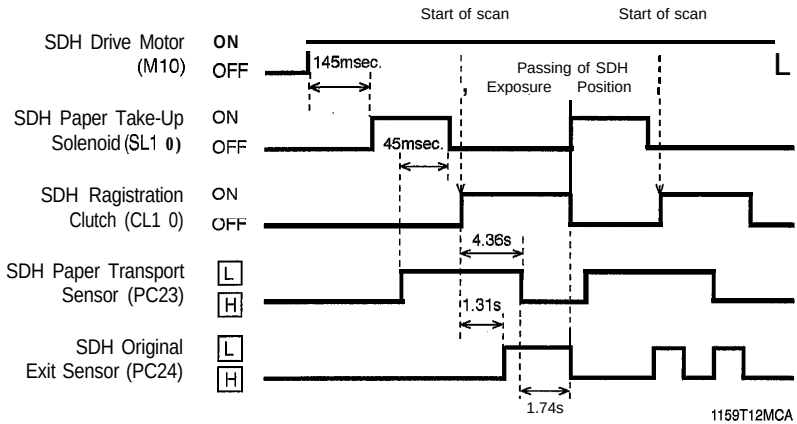

	Control Signal	Blocked	Unblocked	WIRING DIAGRAM
PC23	PWB-A PJ1A-10	L	H	11-c
PC24	PWB-A PJ1A-9	L	H	11-D

	Control Signal	Energized	Deenergized	WIRING DIAGRAM
MI0	PWB-A PJ1A-8	L	H	9-B
SL10	PWB-A	PJ1A-6	L H	11-c
CL10	PWB-A	PJ1A-7	L H	11-D

25 MEMORY BACKUP

Counter value and Data of Teck. Rep. Mode or User Mode are memorized into the IC3 (EEPROM) on the Master Board PWB-A.

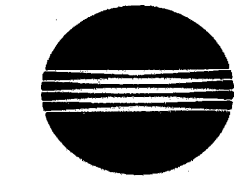

MINOLTA

Copyright
1997 MINOLTA Co., Ltd
Printed in Japan

Use of this manual should be strictly supervised to avoid disclosure of confidential information.

MINOLTA CO., LTD.

1159-7991-I 1 97074370
Printed In Japan