EP1031/1031F

PARTS MANUAL

MINOLTA

AREA CAHRT

AREA No.	AREA	AREA No.	AREA
0406	METRIC (EXCEPT EUROPE)	2505	115/120/127V
0702	EXCEPT USA/CANADA	2612	220/240V
0703	EXCEPT EUROPE	2619	220/240V (EXCEPT EUROPE)
2300	INCH	2704	USA/CANADA
2402	METRIC (EXCEPT JAPAN/EUROPE)	2706	EUROPE

We recommend that you cross out from your Parts Manuals those parts numbers which do not apply to your area so that no error is made when ordering parts.

CONTENTS

1. HOUSING 1
2. HOUSING (SDH) 3
3. PAPER TAKE-UP SECTION (SDH) 5
4. PAPER TRANSPORT SECTION (SDH) 7
5. EXPOSURE LAMP SECTION 9
6. OPTICAL FRAMES 11
7. LENS SECTION 13
8. OPTICAL DRIVE SECTION 15
9. IMAGING UNIT I 17
10. IMAGING UNIT II 19
11. IMAGING UNIT III 21
12. FUSING SECTION 23
13. FRAMES 25
14. PAPER TAKE-UP SECTION 27
15. PAPER TRANSPORT SECTION 29
16. PAPER TRAY UNIT 31
17. WIRING ACCESSORIES AND JIGS 33
18. SCREWS AND WASHERS 35
19. NUMERICAL INDEX 36
20. COMMONLY USED PARTS 39

SEPTEMBER 1997

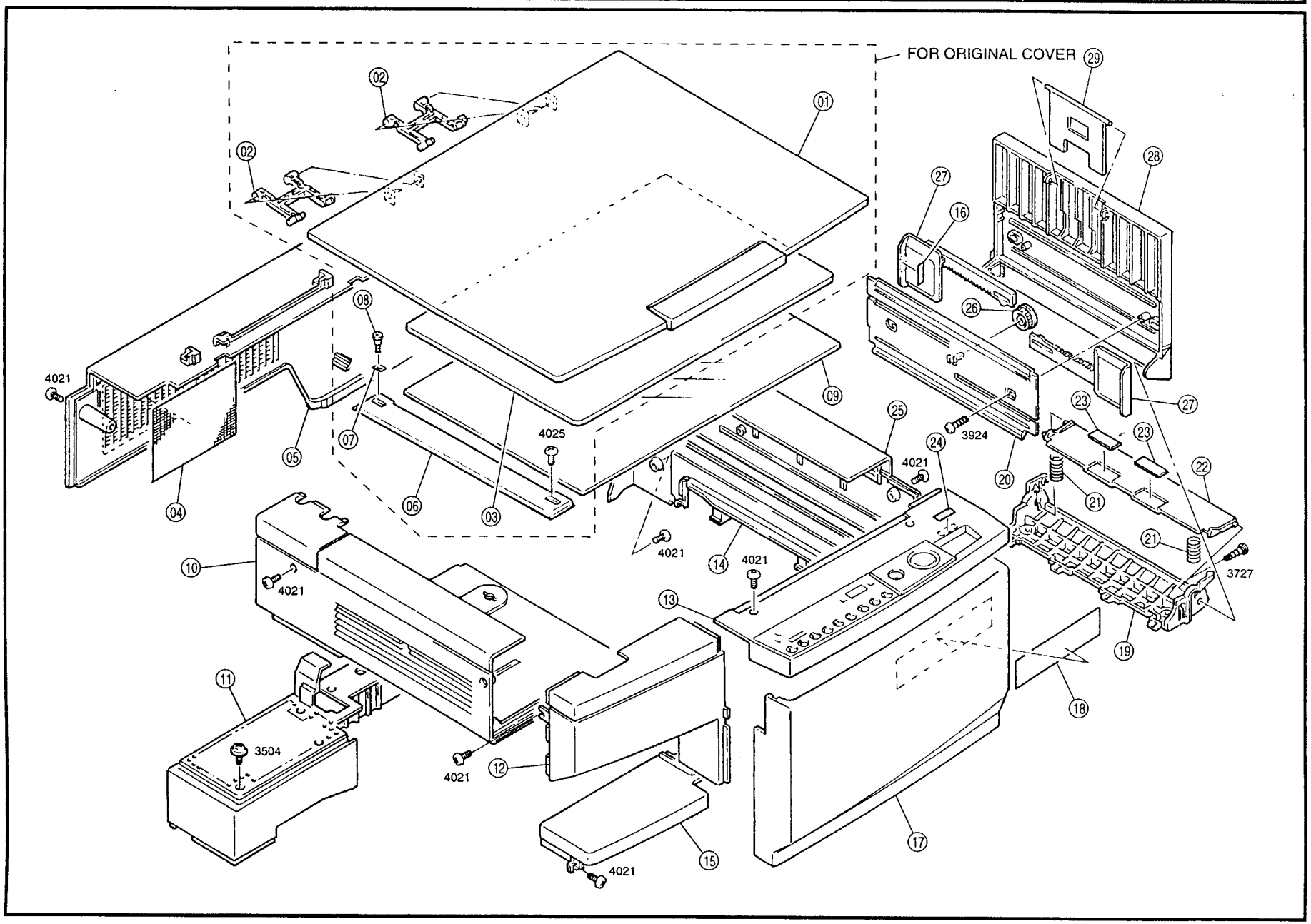
FOR ORIGINAL COVER
01
02
02
03
04
05
06
07
08
09
10
11
12
13
14
15
16
17
18
19
20
21
21
22
23
23
24
25
26
27
27
28
29
4021
4021
4021
4021
4021
4021
4025
3924
3727
3504

INDEX	PART NO.	PART NAME	QTY	AREA	REMARKS	INDEX	PART NO.	PART NAME	QTY	AREA	REMARKS
01AA	1159-1611-02	ORIGINAL COVER	1								
02AA	1159-1612-02	HINGE	2								
03AA	1159-1613-02	PAD	1								
04AA	1159-1010-01	FILTER	1								
05AA	1159-1005-02	REAR COVER	1								
06AA	1159-1608-01	WIDTH SCALE	1								
07AA	1053-3869-01	PLATE SPRING	1								
08AA	1065-1360-01	SHOULDER SCREW	1								
09AA	1159-1603-01	ORIGINAL GLASS	1								
10AA	1159-1004-02	LEFT COVER	1								
11AA	1159-2108-02	COVER	1								
12AA	1159-1002-02	LEFT COVER-FNT	1								
*13AA	1159-0382-01	CONTROL PANEL	1	2402							
*13BA	1159-0381-01	CONTROL PANEL	1	2300							
*13CA	1159-0380-01	CONTROL PANEL	1	2706							
14AA	1159-1006-02	RIGHT COVER-LWR	1								
15AA	1159-1009-01	COVER	1								
16AA	1159-7307-01	LABEL MAX	1								
17AA	1159-1001-02	FRONT COVER	1								
18AA	1139-7332-01	LABEL	1								
19AA	1159-3110-03	FRAME	1								
20AA	1159-3101-02	TABLE	1								
21AA	1159-3113-01	PRESSURE SPRING	2								
22AA	1159-3111-02	LIFTING PLATE	1								
23AA	1159-3115-01	FRICTION SHEET	2								
*24AA	1159-7327-01	LABEL 1031	1	2704							
*24BA	1159-7328-01	LABEL 1031F	1	2704							
25AA	1159-1003-02	RIGHT COVER-UPR	1								
26AA	1067-3026-01	GEAR 20T	1								
27AA	1159-3104-03	REGULATING PLATE	2								
28AA	1159-3102-02	TABLE	1								
29AA	1159-3103-02	GUIDE	1								

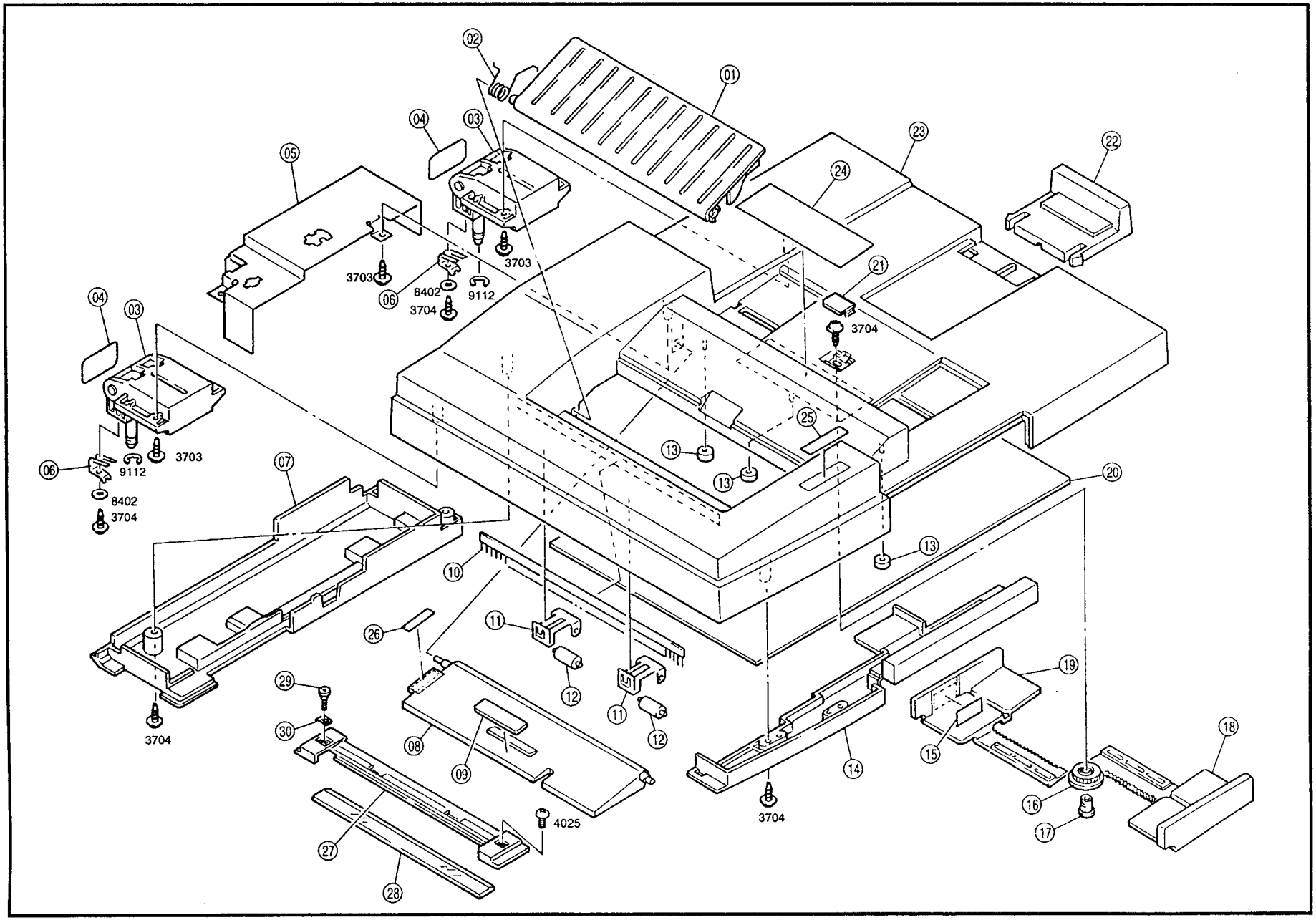
01
02
03
04
05
06
07
08
09
10
11
12
13
14
15
16
17
18
19
20
21
22
23
24
25
26
27
28
29
30
3703
3704
8402
9112
4025





INDEX	PART NO.	PART NAME	QTY	AREA	REMARKS	INDEX	PART NO.	PART NAME	QTY	AREA	REMARKS
01AA	1159-1824-01	GUIDE PLATE	1								
02AA	1159-1932-01	TORSION SPRING	1								
03AA	1159-1913-04	HINGE	2								
04AA	1159-1940-01	SEAL	2								
05AA	1159-1715-01	COVER	1								
06AA	1159-1728-01	PLATE SPRING	2								
07AA	1159-1830-01	REAR COVER-LWR	1								
08AA	1159-1801-03	LIFTING PLATE	1								
09AA	1045-5401-01	CORK	1								
10AA	1159-1936-01	NEUTRALIZING BRUSH	1								
11AA	1159-1911-01	PLATE SPRING	2								
12AA	1159-1812-01	ROLL	2								
13AA	1159-1937-01	COLLAR	3								
14AA	1159-1829-01	COVER	1								
15AA	1159-7309-01	LABEL MAX	1								
16AA	1159-1834-01	GEAR 20T	1								
17AA	1159-1833-01	BUSHING	1								
18AA	1159-1825-02	REGULATING PLATE	1								
19AA	1159-1826-02	REGULATING PLATE	1								
20AA	1159-1613-02	PAD	1								
21AA	1139-1039-01	COVER	1								
22AA	1159-1807-01	TABLE	1								
23AA	1159-1823-03	TOP COVER	1								
24AA	1159-7308-01	LABEL	1								
25AA	1159-7310-02	LABEL	1								
26AA	1159-1943-01	POLYESTER FILM	1								
27AA	1159-1602-02	WIDTH SCALE	1								
28AA	1159-1601-02	ORIGINAL GLASS	1								
29AA	1065-1360-01	SHOULDER SCREW	1								
30AA	1053-3869-01	PLATE SPRING	1								

3 PAPER TAKE-UP SECTION (SDH)

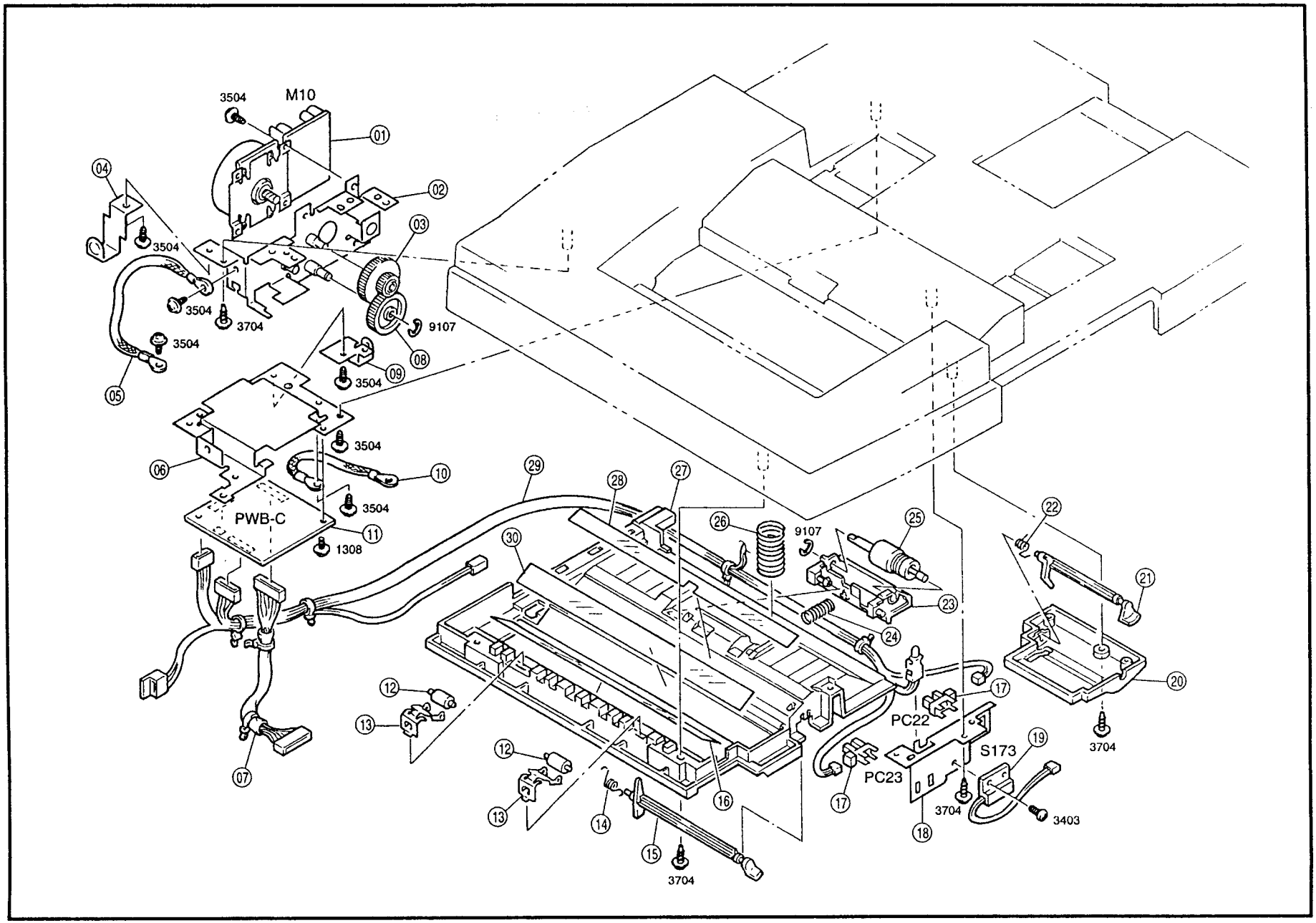





INDEX	PART NO.	PART NAME			QTY	AREA	REMARKS	INDEX	PART NO.	PART NAME	QTY	AREA	REMARKS
01AA	9314-2610-11	PWB-MOTOR	MAIN DRV	(M10)	1								
02AA	1159-0232-02	BRACKET			1								
03AA	1159-1814-01	GEAR 20/64T			1								
04AA	1159-1729-01	PLATE SPRING			1								
05AA	1159-6818-01	HARNESS			1								
06AA	1159-1713-01	BRACKET			1								
07AA	1159-6814-02	HARNESS			1								
08AA	1159-1836-01	GEAR 40T			1								
09AA	1159-1730-01	PLATE SPRING			1								
10AA	1159-6817-02	HARNESS			1								
11AA	1159-0103-01	PW BOARD-C	MAIN	(PWB-C)	1								
12AA	1159-1812-01	ROLL			2								
13AA	1159-1702-02	PLATE SPRING			2								
14AA	1159-1904-01	TORSION SPRING			1								
15AA	1159-1806-01	ACTUATOR			1								
16AA	1159-1931-01	GUIDE			1								
17AA	9335-1310-31	PHOTO INTERRUPTER		(PC22,23)	2								
18AA	1159-1708-01	BRACKET			1								
19AA	9334-2610-11	REED SWITCH	OPN/CLS	(S173)	1								
20AA	1159-1832-02	COVER			1								
21AA	1159-1817-01	ACTUATOR			1								
22AA	1159-1942-01	TORSION SPRING			1								
23AA	1159-1810-02	HOLDER			1								
24AA	1159-1908-01	PRESSURE SPRING			1								
25AA	1159-0161-02	SEPARATOR ROLLER			1								
26AA	1159-1901-02	PRESSURE SPRING			1								
27AA	1159-1822-03	CONVEYOR PLATE			1								
28AA	1159-1930-01	GUIDE			1								
29AA	1159-6815-01	HARNESS			1								
30AA	1159-1935-01	POLYESTER FILM			1								

4 PAPER TRANSPORT SECTION (SDH)

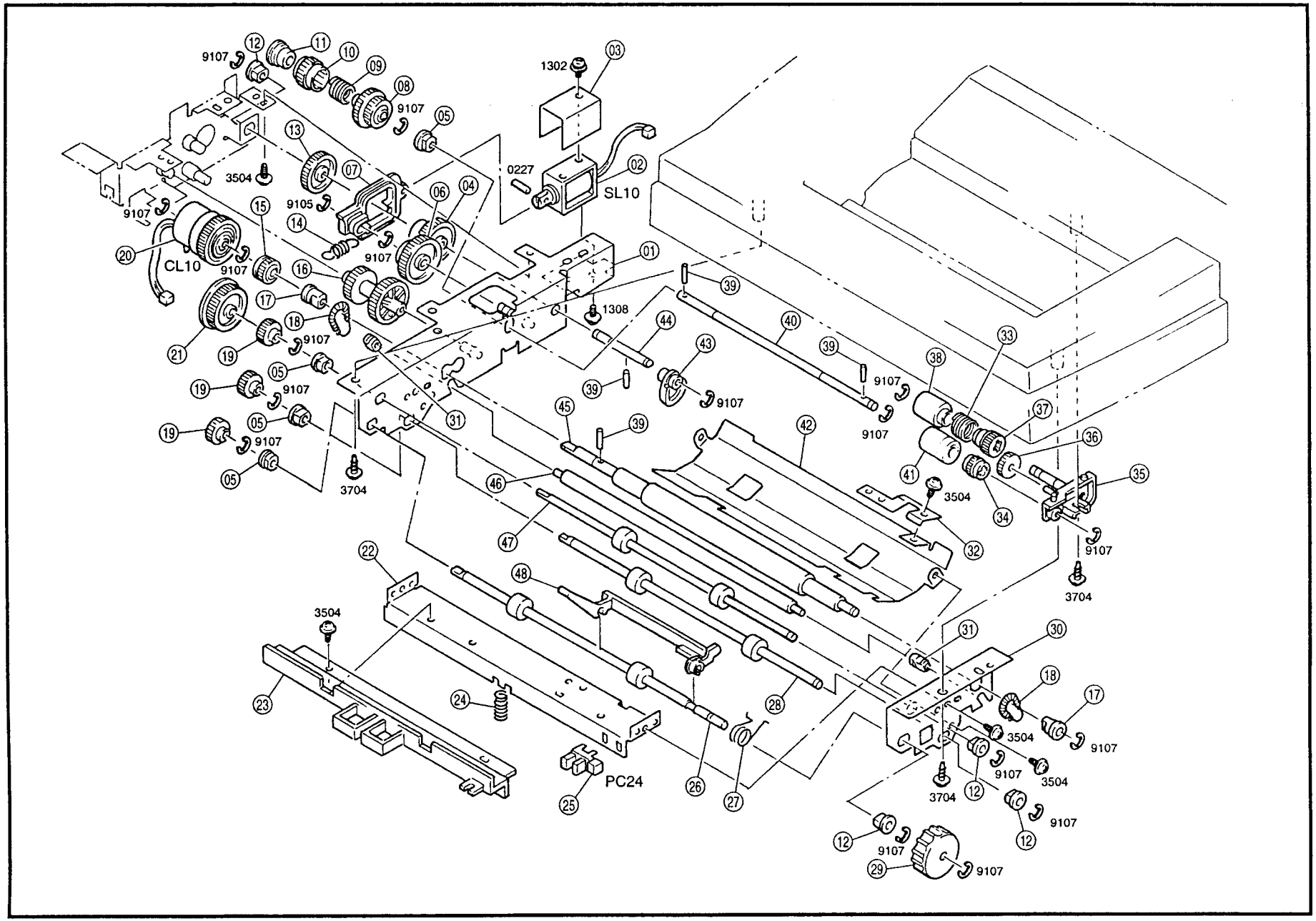





INDEX	PART NO.	PART NAME	QTY	AREA	REMARKS
01AA	1159-0231-01	REAR FRAME	1		
02AA	9321-2610-71	SOLENOID TAKE-UP (SL10)	1		
03AA	1159-1716-01	COVER	1		
04AA	1159-1835-02	GEAR	1		
05AA	1159-1938-01	BUSHING	4		
06AA	1067-1814-01	GEAR 15/32T	1		
07AA	1159-1804-01	LEVER	1		
08AA	1159-1821-01	GEAR 26/18T	1		
09AA	1159-1920-01	CLUTCH SPRING	1		
10AA	1038-4426-01	RATCHET WHEEL	1		
11AA	1159-1828-01	BUSHING	1		
12AA	1159-1837-01	BUSHING	4		
13AA	1159-1818-01	GEAR 26T	1		
14AA	1067-1907-01	TENSION SPRING	1		
15AA	1159-1820-01	GEAR 14T	1		
16AA	1159-1815-01	GEAR 32/32T	1		
17AA	1159-1910-01	BUSHING	2		
18AA	1159-1905-01	TENSION SPRING	2		
19AA	1159-1811-01	GEAR 14T	3		
20AA	9322-1511-21	CLUTCH REGIST (CL10)	1		
21AA	1159-1819-01	GEAR 30T	1		
22AA	1159-1701-02	REINFORCE PLATE	1		
23AA	1159-1831-01	COVER	1		
24AA	1067-1737-12	PRESSURE SPRING	1		
25AA	9335-1310-31	PHOTO INTERRUPTER EXIT (PC24)	1		
26AA	1159-1927-02	ROLLER	1		
27AA	1159-1912-01	TORSION SPRING	1		
28AA	1159-1928-01	ROLLER	1		
29AA	1066-1120-01	KNOB	1		
30AA	1159-1706-02	BRACKET	1		
31AA	1159-1939-01	BUSHING	2		
32AA	1159-1709-01	GROUND PLATE	1		
33AA	1067-3003-01	CLUTCH SPRING	1		
34AA	1067-1841-01	GEAR 23T	1		
35AA	1159-1827-01	HOLDER	1		
36AA	1159-1838-01	GEAR 34T	1		
37AA	1067-3005-01	GEAR 26T	1		
38AA	1159-1907-02	ROLLER	1		
39AA	1067-2501-01	PIN	4		
40AA	1159-1906-02	SHAFT	1		
41AA	1159-1941-02	ROLLER	1		
42AA	1159-1712-01	GUIDE PLATE	1		
43AA	1159-1802-02	CAM	1		
44AA	1159-1902-02	SHAFT	1		
45AA	1159-1925-01	ROLLER	1		
46AA	1159-1926-01	ROLLER	1		
47AA	1159-1933-01	ROLLER	1		
48AA	1159-1813-02	LEVER	1		

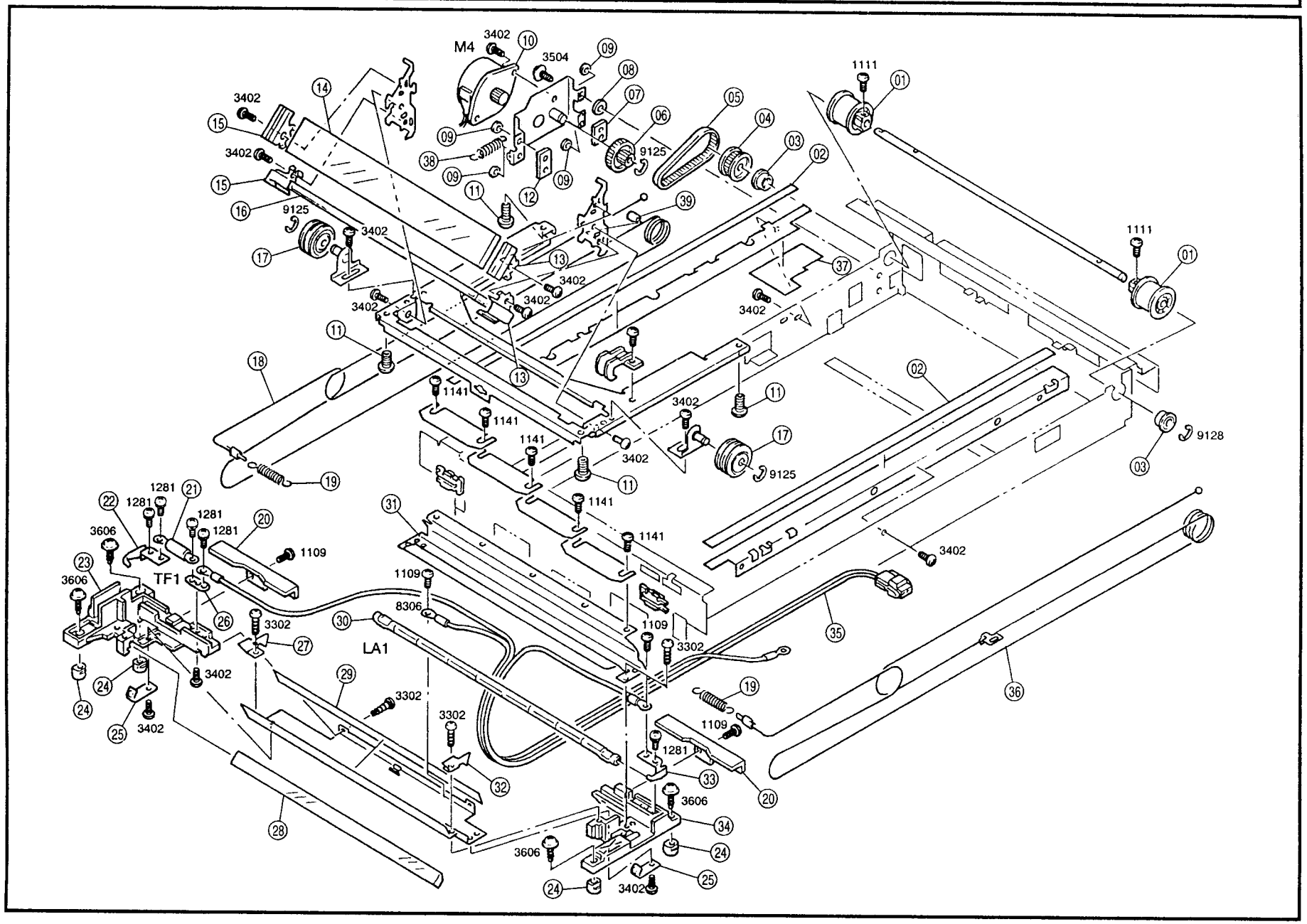
M4
3402
3504
1111
9125
9128
1141
1281
3606
1109
8306
3302
TF1
LA1





INDEX	PART NO.	PART NAME			QTY	AREA	REMARKS	INDEX	PART NO.	PART NAME	QTY	AREA	REMARKS
01AA	1159-7807-01	PULLEY			2								
02AA	1159-7859-01	TAPE			2								
03AA	1159-7862-01	BALL BEARING			2								
04AA	1159-7806-02	PULLEY 34T			1								
05AA	1159-7809-01	TIMING BELT			1								
06AA	1159-7808-01	PULLEY 17/45T			1								
07AA	1159-7854-01	RETAINING RING			1								
08AA	1159-7855-01	RETAINING RING			1								
09AA	1159-7856-02	RETAINING RING			4								
10AA	1159-7805-01	MOTOR	SCANNER	(M4)	1								
11AA	1159-7857-02	SLIDER			4								
12AA	1159-7853-01	RETAINING RING			1								
13AA	1159-7802-02	MIRROR HOLDER			2								
14AA	1159-7840-01	MIRROR			1								
15AA	1159-7801-02	MIRROR HOLDER			2								
16AA	1159-7839-01	MIRROR			1								
17AA	1139-1608-01	BALL BEARING			2								
18AA	1159-7825-01	WIRE			1								
19AA	1159-7803-01	PRESSURE SPRING			2								
20AA	1159-7826-02	COVER			2								
21AA	1159-7815-02	THERMAL FUSE	FUSE	(TF1)	1								
22AA	1159-7823-02	GROUND PLATE			1								
23AA	1159-7814-02	BASE FRAME			1								
24AA	1159-7844-01	SLIDER			4								
25AA	1159-7820-01	PLATE SPRING			2								
26AA	1159-7817-01	GROUND PLATE			1								
27AA	1159-7834-01	REFLECTOR			1								
28AA	1159-7838-01	MIRROR			1								
29AA	1159-7835-01	SEAL			1								
*30AA	1159-7818-01	TUBE LAMP	EXPOSURE	(LA1)	1	2505							
*30BA	1159-7819-01	TUBE LAMP	EXPOSURE	(LA1)	1	2612							
31AA	1159-7821-02	REFLECTOR			1								
32AA	1159-7833-01	REFLECTOR			1								
33AA	1159-7822-02	GROUND PLATE			1								
34AA	1159-7813-02	BASE FRAME			1								
35AA	1159-7816-01	HARNESS			1								
36AA	1159-7824-01	WIRE			1								
37AA	1159-7847-01	POLYESTER FILM			1								
38AA	1159-7849-01	TENSION SPRING			1								
39AA	1159-3014-01	COLLAR			1								

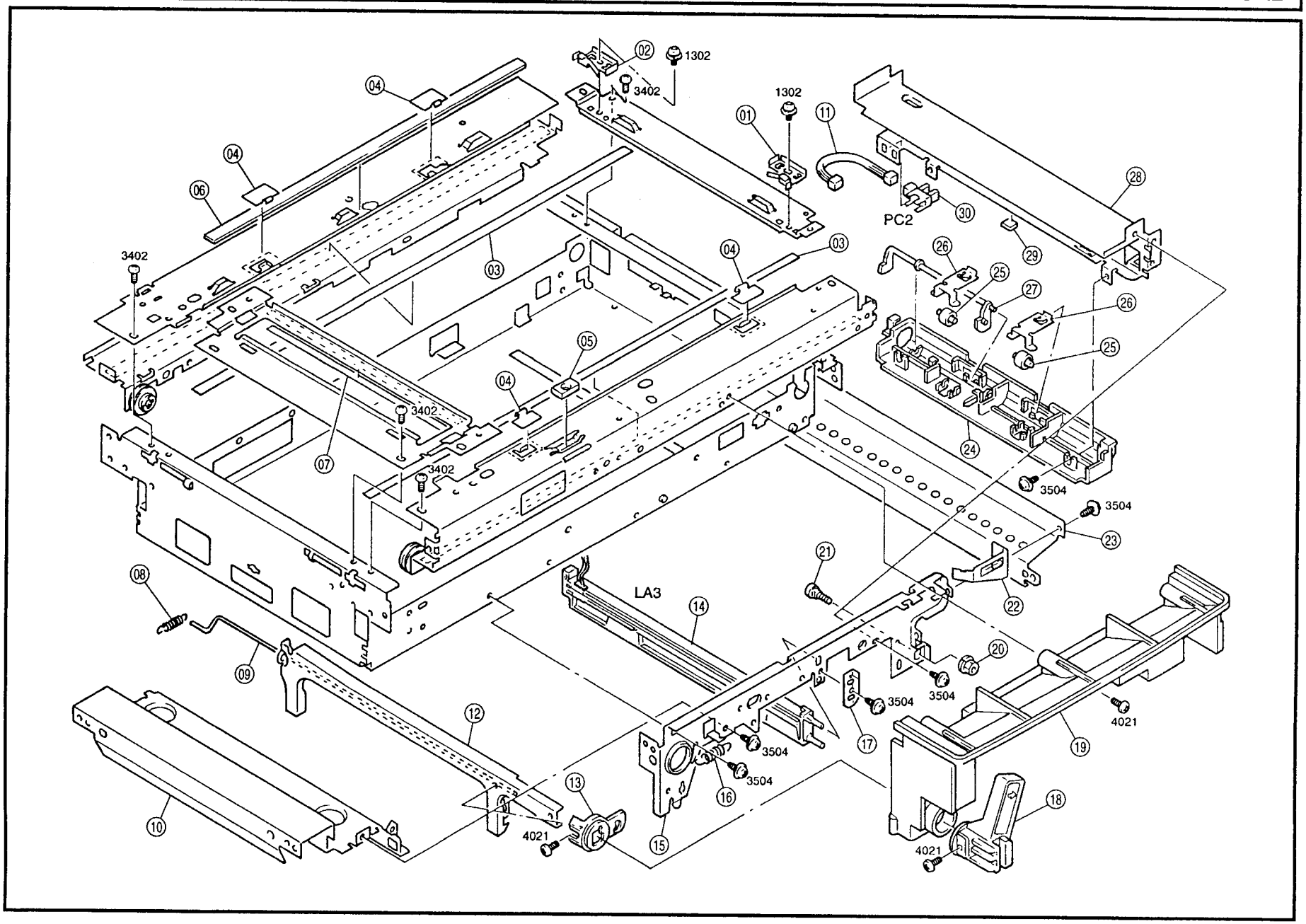
02
1302
3402
1302
01
11
04
04
06
3402
03
03
04
PC2
30
28
29
26
25
27
26
25
05
04
3402
07
3402
24
3504
3504
23
21
22
08
LA3
14
20
09
3504
3504
4021
12
17
19
3504
3504
16
13
18
10
4021
15
4021





INDEX	PART NO.	PART NAME	QTY	AREA	REMARKS	INDEX	PART NO.	PART NAME	QTY	AREA	REMARKS
01AA	1159-1605-01	SET PLATE	1								
02AA	1159-1610-01	SET PLATE	1								
03AA	1159-7858-01	TAPE	2								
04AA	1159-7865-02	SHEET	4								
05AA	9326-2320-21	MAGNET FOR SDH	1								
06AA	1159-7867-01	SPONGE	1								
07AA	1159-7851-01	SHEET	1								
08AA	1159-2104-01	TENSION SPRING	1								
09AA	1159-2101-01	ACTUATOR	1								
10AA	1159-2009-01	RAIL	1								
11AA	1159-6808-01	HARNESS	1								
12AA	1159-2013-01	BRACKET	1								
13AA	1159-2023-02	COLLAR	1								
14AA	1159-6052-01	PWB-LAMP IMAGE ER (LA3)	1								
15AA	1159-2007-01	FRAME	1								
16AA	1159-2014-01	TENSION SPRING	1								
17AA	1159-4114-01	BRACKET	1								
18AA	1159-2012-01	HANDLE	1								
19AA	1159-1204-03	COVER	1								
20AA	1052-2306-01	NUT	1								
21AA	1159-2024-01	SHOULDER SCREW	1								
22AA	1159-2029-01	BRACKET	1								
23AA	1159-2011-02	REINFORCE PLATE	1								
24AA	1159-3524-02	GUIDE PLATE	1								
25AA	1159-3521-02	ROLL	2								
26AA	1159-3522-01	PLATE SPRING	2								
27AA	1159-3511-01	ACTUATOR	1								
28AA	1159-2010-01	RAIL	1								
29AA	1159-3512-01	SPONGE	1								
30AA	9335-1310-31	PHOTO INTERRUPTER TAKE-UP (PC2)	1								

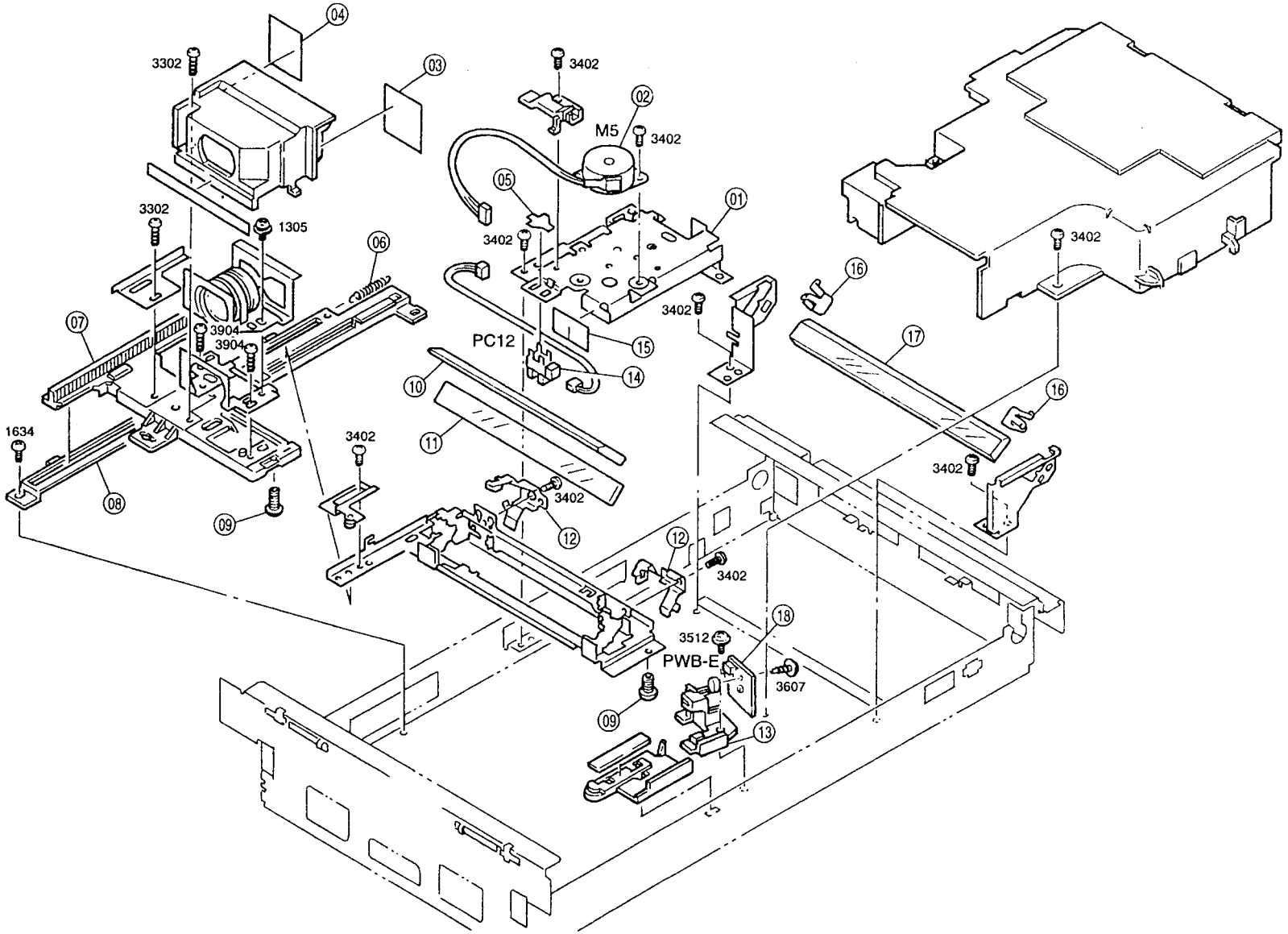
04
3302
03
3402
02
M5
3402
05
01
3302
1305
06
3402
3402
16
07
3904
3904
PC12
15
3402
17
10
14
16
1634
3402
11
3402
3402
08
09
12
12
3402
18
3512
PWB-E
3607
09
13

INDEX	PART NO.	PART NAME	QTY	AREA	REMARKS	INDEX	PART NO.	PART NAME	QTY	AREA	REMARKS
01AA	1159-7810-01	BRACKET 0	1								
01BA	1159-7863-01	BRACKET +	1								
01CA	1159-7864-01	BRACKET -	1								
02AA	1159-7811-01	MOTOR LENS (M5)	1								
03AA	1159-7846-01	POLYESTER FILM	1								
04AA	1159-7845-01	POLYESTER FILM	1								
05AA	1136-2131-03	STOPPER	1								
06AA	1159-7852-01	TENSION SPRING	1								
07AA	1159-7866-01	RACK GEAR	1								
08AA	1159-7812-02	GUIDE RAIL	1								
09AA	1159-7857-02	SLIDER	2								
10AA	1159-7842-01	MIRROR	1								
11AA	1159-7841-01	MIRROR	1								
12AA	1159-7837-01	HOLDER	2								
13AA	1159-7804-02	HOLDER	1								
14AA	9335-1310-31	PHOTO INTERRUPTER LENS HP (PC12)	1								
15AA	1159-7848-01	POLYESTER FILM	1								
16AA	1159-7836-01	PLATE SPRING	2								
17AA	1159-7843-01	MIRROR	1								
18AA	1159-0105-01	PW BOARD-E EE (PWB-E)	1								

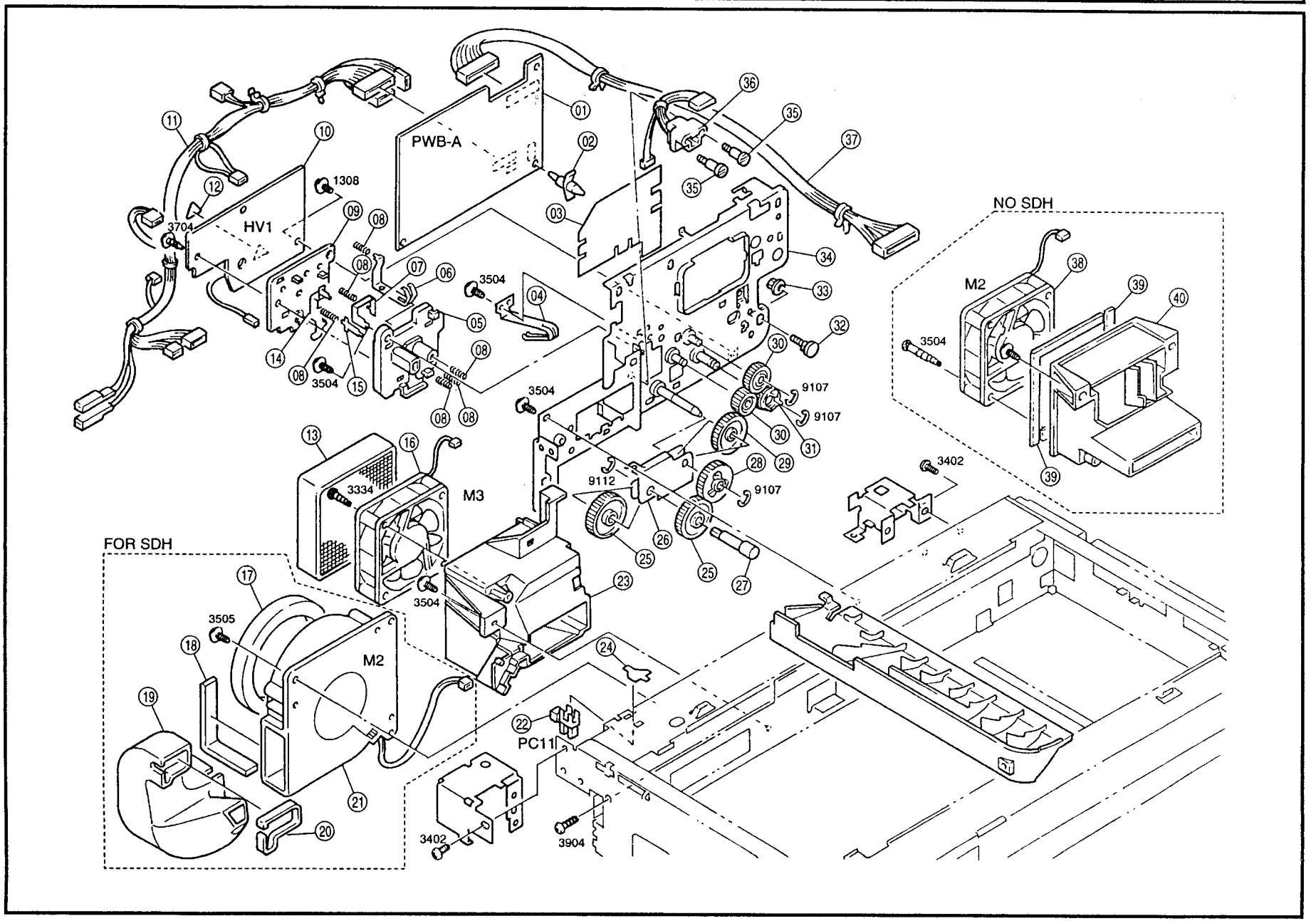
PWB-A
HV1
M2
M3
PC11
NO SDH
FOR SDH
1308
3704
3504
3334
3505
3402
3904
9107
9112

INDEX	PART NO.	PART NAME	QTY	AREA	REMARKS	INDEX	PART NO.	PART NAME	QTY	AREA	REMARKS
01AA	1159-0101-05	PW BOARD-A MASTER (PWB-A)	1								
02AA	9384-1900-56	PWB SUPPORT 6.35H	1								
03AA	1159-2028-02	COVER	1								
04AA	1159-4012-01	PLATE SPRING	1								
05AA	1159-4021-03	HOLDER	1								
06AA	1159-4024-01	GROUND PLATE	1								
07AA	1159-4023-01	GROUND PLATE	1								
08AA	1159-4120-01	PRESSURE SPRING	6								
09AA	1159-4025-03	COVER	1								
10AA	1159-6205-03	PWB-HV (HV1)	1								
11AA	1159-6804-02	HARNESS	1								
12AA	1080-7303-01	LABEL HIGH VOLTAGE	1								
*13AA	1159-2032-01	OZON FILTER	1	0703							
*13BA	1159-2027-02	OZONE FILTER	1	2706							
14AA	1159-4022-02	GROUND PLATE	1								
15AA	1159-4026-01	GROUND PLATE	1								
16AA	9313-1610-81	FAN MOTOR OZONE FAN (M3)	1								
17AA	1159-1615-01	SPONGE	1								
18AA	1159-1617-01	SPONGE	1								
19AA	1159-1614-01	DUCT	1								
20AA	1159-1616-01	SPONGE	1								
21AA	9313-1611-01	FAN MOTOR COOLING (M2)	1								
22AA	9335-1310-31	PHOTO INTERRUPTER SCANNER (PC11)	1								
23AA	1159-2020-02	DUCT	1								
24AA	1136-2131-03	STOPPER	1								
25AA	1159-2525-01	GEAR 35T	2								
26AA	1159-2508-01	AXLE PLATE	1								
27AA	1159-2524-01	SHAFT	1								
28AA	1159-2523-01	GEAR 32T	1								
29AA	1159-2520-01	GEAR 32T	1								
30AA	1159-2519-01	GEAR 21T	2								
31AA	1159-2521-01	JOINT	1								
32AA	1159-2024-01	SHOULDER SCREW	1								
33AA	1052-2306-01	NUT	1								
34AA	1159-0202-03	FRAME	1								
35AA	1159-5525-01	SHOULDER SCREW	2								
36AA	1159-6819-01	HARNESS	1								
37AA	1159-6805-01	HARNESS	1								
38AA	9313-1610-91	FAN MOTOR COOLING (M2)	1								
39AA	1159-1753-01	SPONGE	2								
40AA	1159-1750-01	DUCT	1								

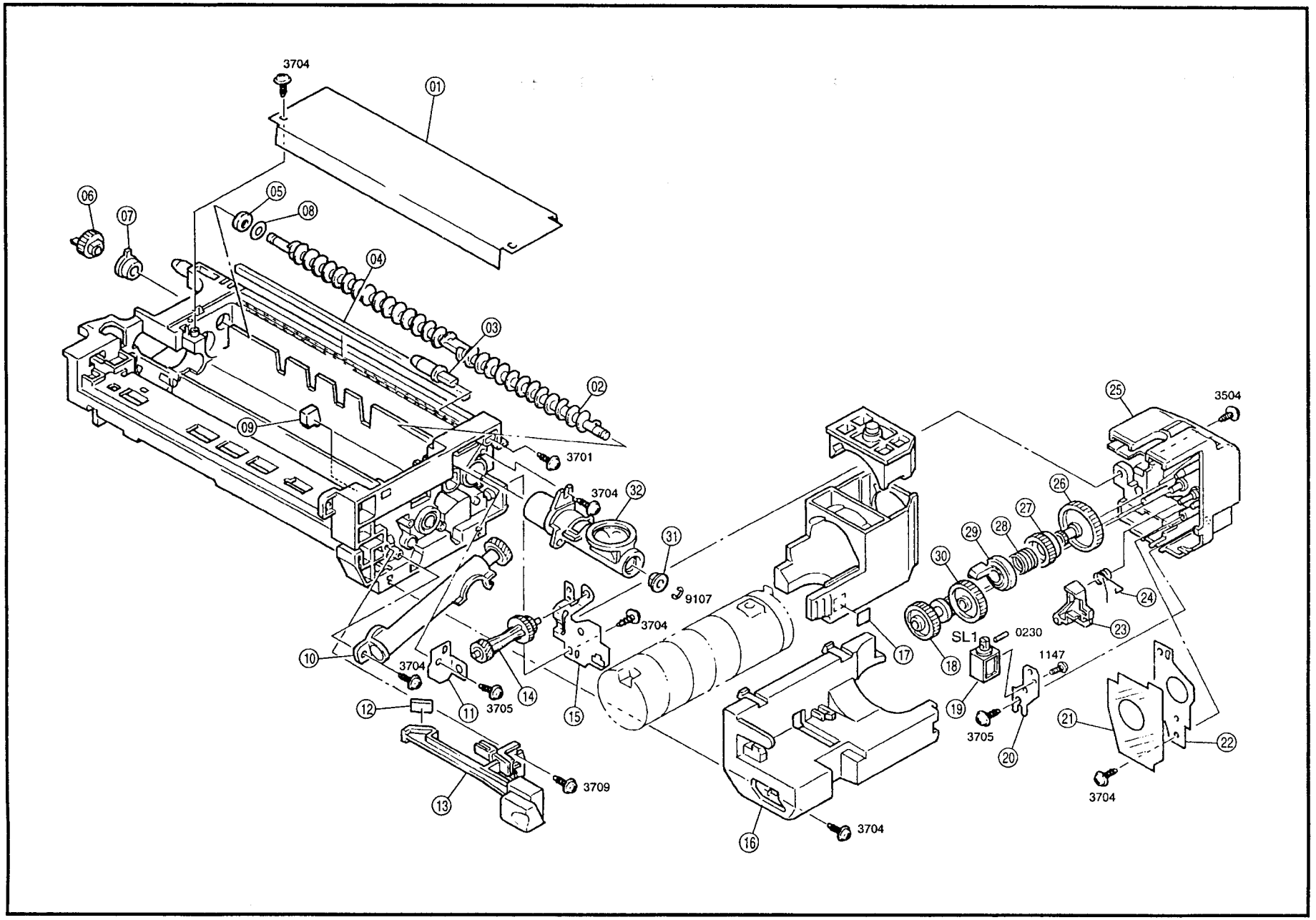
3704
01
06
07
05
08
04
03
02
09
3701
3704
32
31
9107
3704
10
3704
11
3705
12
14
15
13
3709
16
3704
17
18
SL1
0230
1147
19
3705
20
21
22
3704
23
24
25
3504
26
27
28
29
30

INDEX	PART NO.	PART NAME	QTY	AREA	REMARKS	INDEX	PART NO.	PART NAME	QTY	AREA	REMARKS
01AA	1159-5018-04	COVER	1								
02AA	1159-0752-01	ROLLER ASSY	1								
03AA	1067-5044-02	SHAFT	1								
04AA	1159-5028-01	SPONGE	1								
05AA	1159-5011-01	SEAL	1								
06AA	1159-5026-01	GEAR 23T	1								
07AA	1159-5010-01	BUSHING	1								
08AA	1159-5032-01	WASHER	1								
09AA	1159-5526-04	SEAL	1								
10AA	1159-0152-02	DUCT	1								
11AA	1159-5017-01	BRACKET	1								
*12AA	1132-5533-01	SEAL	1	0702							
*13AA	1159-5557-01	ROCK LEVER	1	0702							
14AA	1159-5311-01	GEAR 14/24/13T	1								
15AA	1159-5304-02	BRACKET	1								
16AA	1159-5555-02	HOLDER	1								
17AA	1067-5327-01	LABEL GREEN	1								
18AA	1132-5306-01	GEAR 18/35T	1								
19AA	9321-2310-22	SOLENOID TONER (SL1)	1								
20AA	1159-5305-01	BRACKET	1								
21AA	1159-5313-01	POLYESTER FILM	1								
22AA	1159-5317-01	BRACKET	1								
23AA	1159-5307-01	PAWL	1								
24AA	1159-5308-01	TORSION SPRING	1								
25AA	1159-5352-01	HOLDER	1								
26AA	1132-5311-01	GEAR 54T	1								
27AA	1067-5313-02	RATCHET	1								
28AA	1132-5312-01	CLUTCH SPRING	1								
29AA	1159-5309-02	HOLDER	1								
30AA	1159-5315-01	GEAR 40T	1								
31AA	1200-3221-06	BUSHING	1								
32AA	1159-5012-01	CONVEYOR DUCT	1								

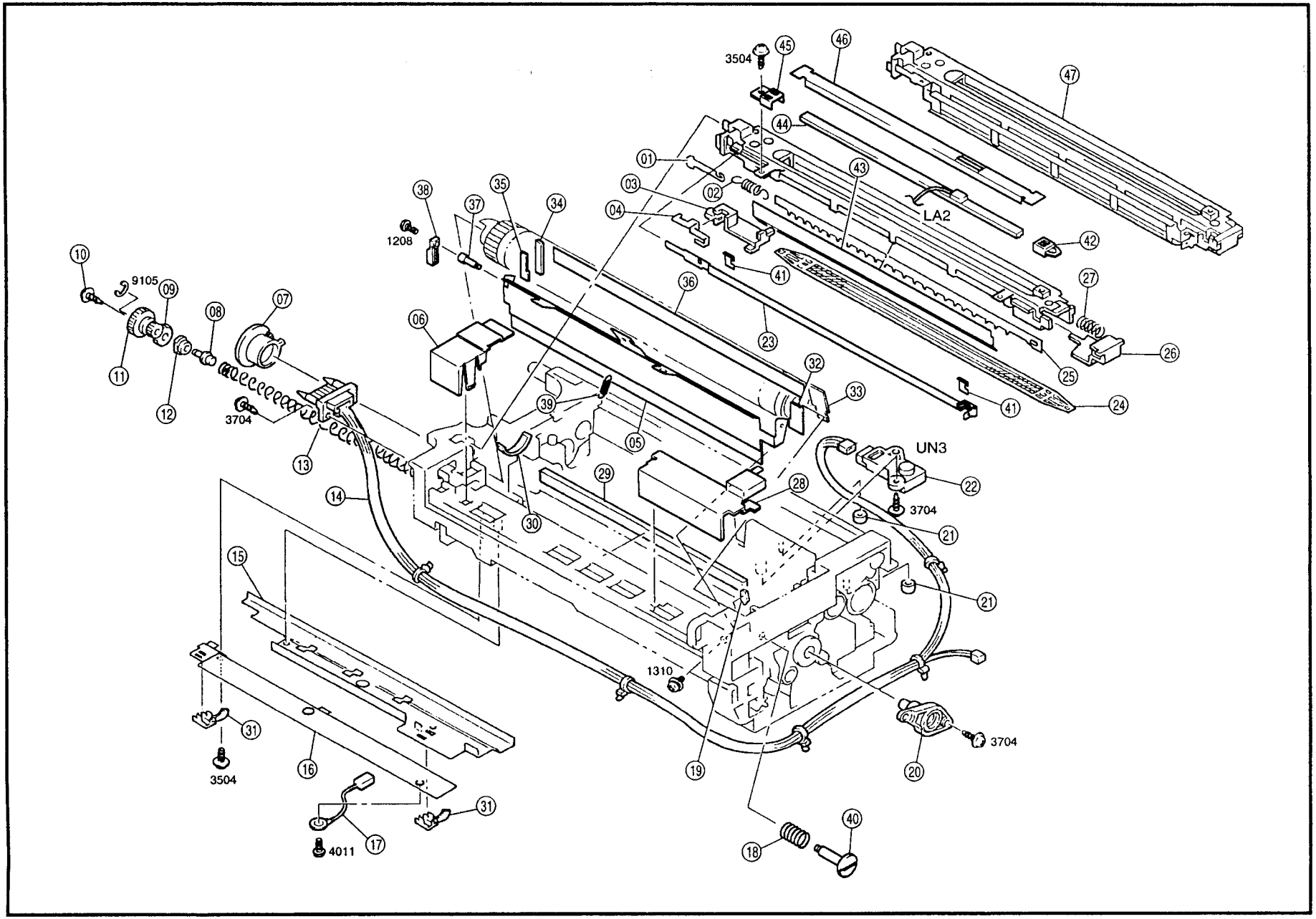
3504
45
46
47
44
01
43
03
02
04
LA2
42
38
37
35
34
1208
41
27
10
9105
09
08
07
36
06
23
26
25
11
12
3704
32
33
39
05
24
41
13
UN3
29
28
22
14
30
3704
21
15
21
1310
31
3704
3504
16
19
20
31
40
4011
17
18

INDEX	PART NO.	PART NAME	QTY	AREA	REMARKS
01AA	1159-4005-01	GROUND PLATE	1		
02AA	1159-4009-01	TENSION SPRING	1		
03AA	1159-4008-01	HOLDER	1		
04AA	1159-4006-01	HOOK PLATE	1		
05AA	1159-5501-05	CLEANING BLADE	1		
06AA	1159-5509-02	COVER	1		
07AA	1159-4405-01	BUSHING	1		
08AA	1159-5510-01	SHAFT	1		
09AA	1067-5509-01	GEAR 22T	1		
10AA	1159-5524-01	SCREW	1		
11AA	1159-5522-02	GEAR 17/24T	1		
12AA	1159-5511-01	BUSHING	1		
13AA	1159-5502-01	TRANSPORT COIL	1		
14AA	1159-6820-01	HARNESS	1		
15AA	1159-5504-03	ANTISPILL PLATE	1		
16AA	1159-5531-02	BRACKET	1		
17AA	1159-6812-03	HARNESS	1		
18AA	1159-5538-01	PRESSURE SPRING	1		
19AA	1159-5515-04	SEAL	1		
20AA	1159-4404-01	STOP PLATE	1		
21AA	1159-5031-01	COLLAR	2		
22AA	1136-6052-12	ATDC UNIT ATDC (UN3)	1		
23AA	1159-4031-03	BRACKET	1		
24AA	1159-4004-01	GRID	1		
25AA	1159-4003-01	CORONA PLATE	1		
26AA	1159-4007-02	HOLDER	1		
27AA	1159-4014-01	PRESSURE SPRING	1		
28AA	1159-5506-04	COVER	1		
29AA	1159-5518-02	SEAL	1		
30AA	1159-5528-03	SEAL	1		
31AA	1159-4123-01	GUIDE	2		
32AA	1159-5532-02	SEAL	1		
33AA	1159-5533-01	POLYESTER FILM	1		
34AA	1159-5542-01	SEAL	1		
35AA	1159-5541-01	SEAL	1		
36AA	1159-4035-01	SHEET	1		
37AA	1159-5540-01	SHOULDER SCREW	1		
38AA	1159-5537-01	LEVER	1		
39AA	1159-5535-01	TENSION SPRING	1		
40AA	1159-5539-01	SHOULDER SCREW	1		
41AA	1159-4033-02	SEAL	2		
42AA	1159-4030-01	HOLDER	1		
43AA	1159-4032-02	SEAL	1		
44AA	1159-6054-01	BOARD LAMP MAIN (LA2)	1		
45AA	1159-4034-01	HOLDER	1		
46AA	1159-4036-01	SEAL	1		
47AA	1159-0445-01	DRUM CHARGE CORONA	1		

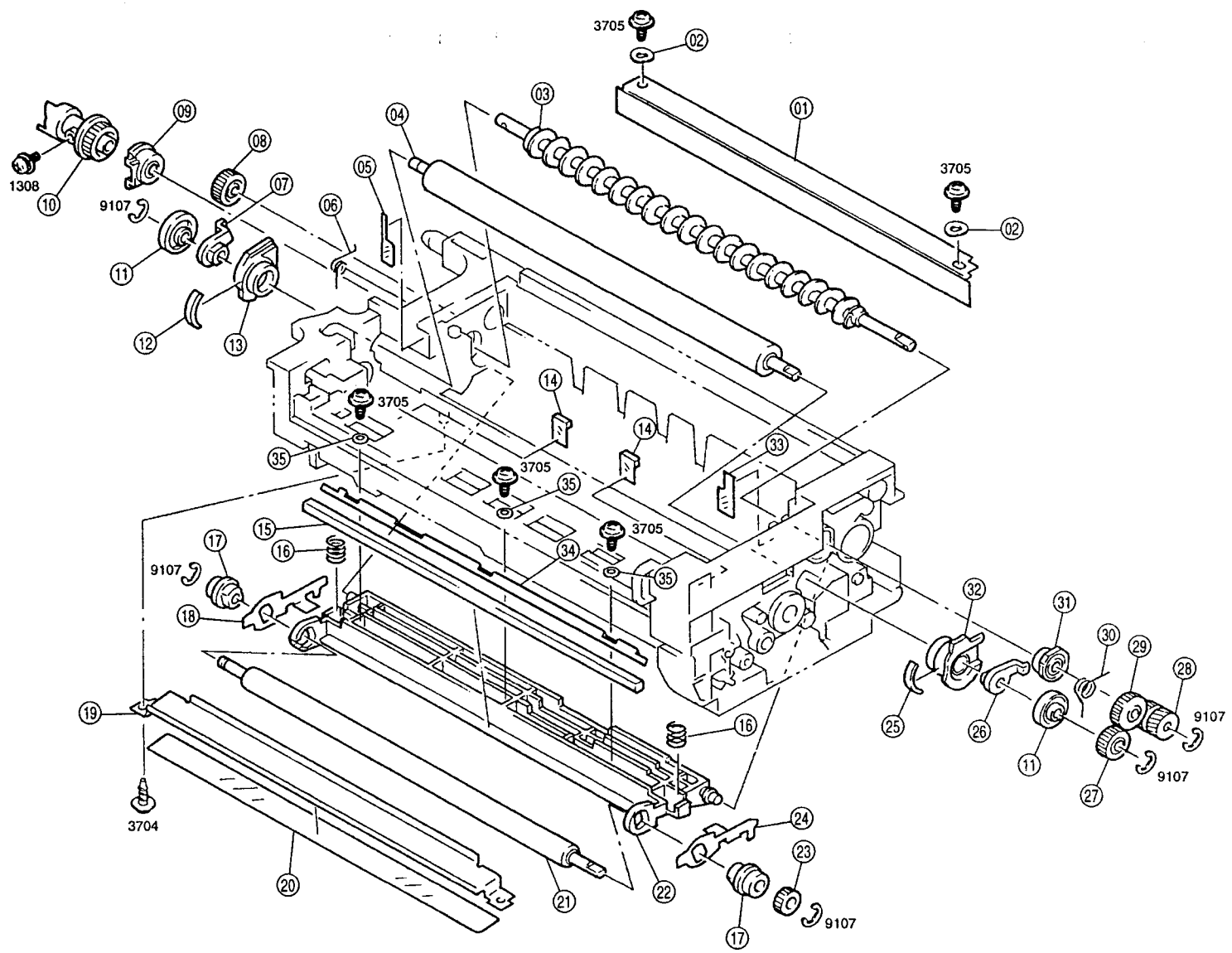
3705
02
03
01
04
09
08
05
07
06
1308
10
9107
11
12
13
3705
02
14
14
3705
35
33
3705
35
15
16
17
9107
18
34
3705
35
32
31
30
29
28
9107
25
26
11
27
9107
19
16
3704
24
23
20
21
22
17
9107

INDEX	PART NO.	PART NAME	QTY	AREA	REMARKS	INDEX	PART NO.	PART NAME	QTY	AREA	REMARKS
01AA	1159-5003-04	REGULATING PLATE	1								
02AA	1139-5250-01	PLATE SPRING	2								
03AA	1159-0162-01	CONVEYOR ROLLER	1								
04AA	1159-5002-03	DEVELOPING ROLLER	1								
05AA	1159-5025-02	POLYESTER FILM	1								
06AA	1159-5014-02	TORSION SPRING	1								
07AA	1159-5022-02	BUSHING	1								
08AA	1159-5027-01	GEAR 20T	1								
09AA	1159-0154-01	BUSHING	1								
10AA	1159-5109-02	JOINT	1								
11AA	1159-5036-01	ROLL	2								
12AA	1159-5030-01	SEAL	1								
13AA	1159-0753-01	BUSHING	1								
14AA	1159-5530-02	SEAL	2								
15AA	1159-3533-02	CLEANING PAD	1								
16AA	1159-3532-01	PRESSURE SPRING	2								
17AA	1067-3517-01	BUSHING	2								
18AA	1159-3536-01	HOLD PLATE	1								
19AA	1159-4113-01	GUIDE PLATE	1								
20AA	1159-4119-01	POLYESTER FILM	1								
21AA	1159-3531-01	ROLLER	1								
22AA	1159-3534-02	GUIDE PLATE	1								
23AA	1067-3502-01	GEAR 20T	1								
24AA	1159-3535-01	HOLD PLATE	1								
25AA	1159-5029-01	SEAL	1								
26AA	1159-5021-01	BUSHING	1								
27AA	1067-5035-01	GEAR 20T	1								
28AA	1159-5016-01	GEAR 12/17T	1								
29AA	1132-5034-01	GEAR 22T	1								
30AA	1159-5013-01	TORSION SPRING	1								
31AA	1144-0168-01	BUSHING	1								
32AA	1159-0754-01	BUSHING	1								
33AA	1159-5024-01	SEAL	1								
34AA	1159-3538-02	REINFORCE PLATE	1								
35AA	1159-3539-01	WASHER	3								

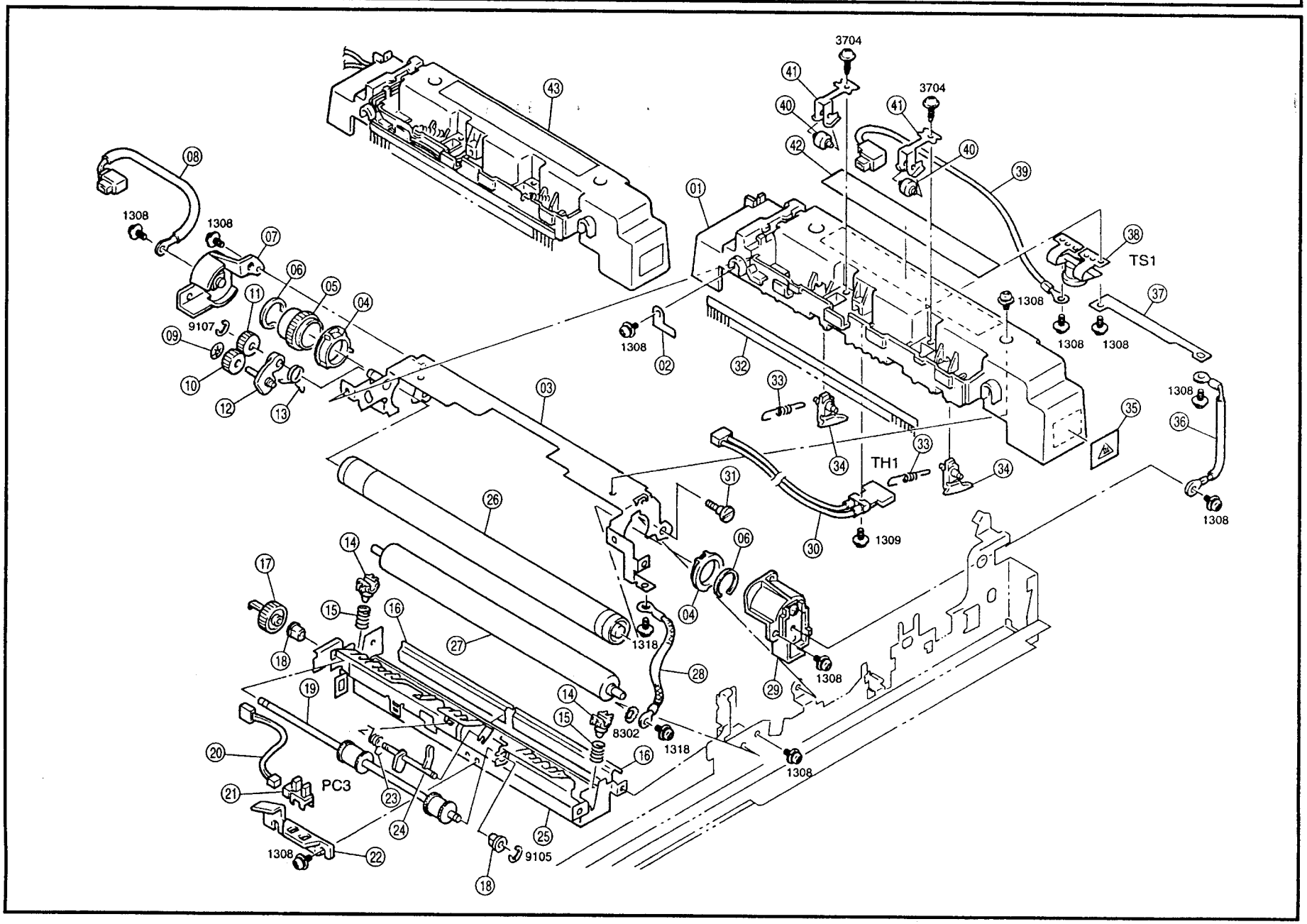
3704
3704
1308
1308
1308
1308
1308
1308
1308
1308
1308
1309
1318
1318
8302
9107
9105
TS1
TH1
PC3

INDEX	PART NO.	PART NAME	QTY	AREA	REMARKS
01AA	1159-5808-02	COVER	1		
02AA	1159-5747-01	BRACKET	1		
03AA	1159-5707-02	FRAME	1		
04AA	1159-5741-02	BUSHING	2		
05AA	1159-5755-01	GEAR 36T	1		
06AA	1159-5743-01	STOPPER PLATE	2		
07AA	1159-0182-02	HOLDER	1		
08AA	1159-6816-01	HARNESS	1		
09AA	1500-2620-01	NUT	1		
10AA	1159-5746-01	GEAR 18T	1		
11AA	1159-5710-01	GEAR 18T	1		
12AA	1159-5712-01	LEVER	1		
13AA	1159-5713-01	TORSION SPRING	1		
14AA	1159-5742-01	BUSHING	2		
15AA	1159-5740-03	PRESSURE SPRING	2		
16AA	1159-5764-01	SHEET	2		
17AA	1159-5727-01	GEAR 26T	1		
18AA	1200-3201-09	BUSHING	2		
19AA	1159-5725-01	ROLLER	1		
20AA	1159-6810-02	HARNESS	1		
21AA	9335-1310-31	PHOTO INTERRUPTER EXIT (PC3)	1		
22AA	1159-5756-01	HOLDER	1		
23AA	1159-5739-01	TORSION SPRING	1		
24AA	1159-5735-02	ACTUATOR	1		
25AA	1159-5736-01	BRACKET	1		
*26AA	1159-5750-02	FUSING ROLLER-UPR	1	2505	
*26BA	1159-5757-02	FUSING ROLLER-UPR	1	2612	
27AA	1159-5702-01	FUSING ROLLER-LWR	1		
28AA	1159-6803-01	HARNESS	1		
29AA	1159-0181-02	HOLDER	1		
30AA	9372-2610-42	THERMISTOR (TH1)	1		
31AA	1159-5760-01	SHOULDER SCREW	1		
32AA	1159-5714-01	NEUTRALIZING BRUSH	1		
33AA	1159-5719-01	TENSION SPRING	2		
34AA	1159-5758-01	SEPARATOR	2		
35AA	1159-7333-01	LABEL CAUTION-HOT	1		
36AA	1159-6811-01	HARNESS	1		
37AA	1159-5720-01	TERMINAL	1		
38AA	9334-1610-21	THERMOSTAT (TS1)	1		
39AA	1159-6801-01	HARNESS	1		
40AA	1050-4707-02	ROLL	2		
41AA	1159-5723-02	PLATE SPRING	2		
42AA	1159-7326-01	LABEL HIGH VOLTAGE	1		
*43AA	1159-0396-01	FUSING UNIT	1	2505	
*43BA	1159-0395-01	FUSING UNIT	1	2612	

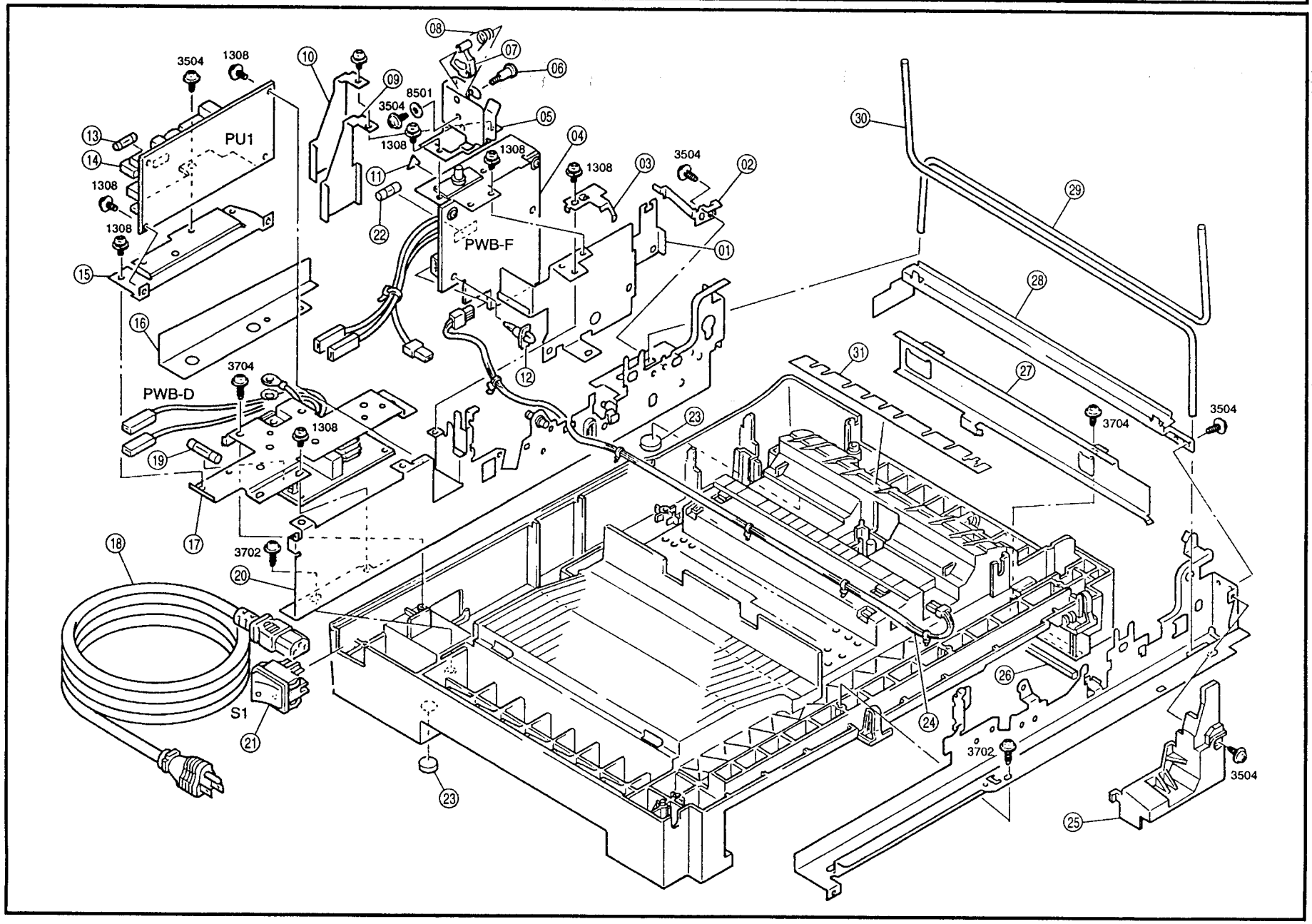
PU1
PWB-F
PWB-D
S1
3504
1308
8501
3704
3702
01
02
03
04
05
06
07
08
09
10
11
12
13
14
15
16
17
18
19
20
21
22
23
24
25
26
27
28
29
30
31

INDEX	PART NO.	PART NAME			QTY	AREA	REMARKS	INDEX	PART NO.	PART NAME	QTY	AREA	REMARKS
01AA	1159-2103-03	BRACKET			1								
02AA	1159-2527-03	STOPPER PLATE			1								
03AA	1159-2114-02	GROUND PLATE			1								
*04AA	1159-0106-02	PW BOARD-F	AVR	(PWB-F)	1	2505							
*04BA	1159-0108-02	PW BOARD-F	AVR	(PWB-F)	1	2612							
05AA	1159-2109-02	HOLDER			1								
06AA	1159-2115-01	SHOULDER SCREW			1								
07AA	1159-2107-03	ACTUATOR			1								
08AA	1159-2110-01	TORSION SPRING			1								
09AA	1159-2120-01	SHEET			1								
10AA	1159-2118-01	SHEET			1								
11AA	1080-7303-01	LABEL HIGH VOLTAGE			1								
12AA	9384-1900-56	PWB SUPPORT 6.35H			2								
13AA	1138-7810-01	FUSE 2A			1								
*14AA	1159-6201-03	PWB-PU	PW SPLY	(PU1)	1	2505							
*14BA	1159-6202-02	PWB-PU	PW SPLY	(PU1)	1	2612							
15AA	1159-2106-02	BRACKET			1								
16AA	1159-2116-02	SHEET			1								
*17AA	1159-0104-03	PW BOARD-D		(PWB-D)	1	2505							
*17BA	1159-0107-03	PW BOARD-D		(PWB-D)	1	2612							
*18AA	9381-4610-31	POWER CORD			1	2505							
*18BA	9381-4310-81	POWER CORD			1	2619							
*19AA	9346-3720-51	FUSE 15A			1	2505							
*19BA	9346-3610-31	FUSE 8A			2	2612							
20AA	1159-0201-02	FRAME			1								
21AA	9332-5610-51	SWITCH	POWER SW	(S1)	1								
*22AA	9346-3710-11	FUSE 3.15A			1	2612							
23AA	1159-2025-01	RUBBER FOOT			2								
24AA	1159-6802-02	HARNESS			1								
25AA	1159-2105-01	COVER			1								
*26AA	1159-3506-01	SPONGE			1	2706							
27AA	1159-3016-01	RAIL			1								
28AA	1159-2005-02	REINFORCE PLATE			1								
29AA	1159-2017-02	TORSION BAR	FOR ORI COVER		1								
29BA	1159-2022-02	TORSION BAR	FOR SDH		1								
30AA	1159-2018-02	TORSION BAR	FOR ORI COVER		1								
30BA	1159-2021-01	TORSION BAR	FOR SDH		1								
31AA	1159-3537-01	POLUYESTER FILM			1								

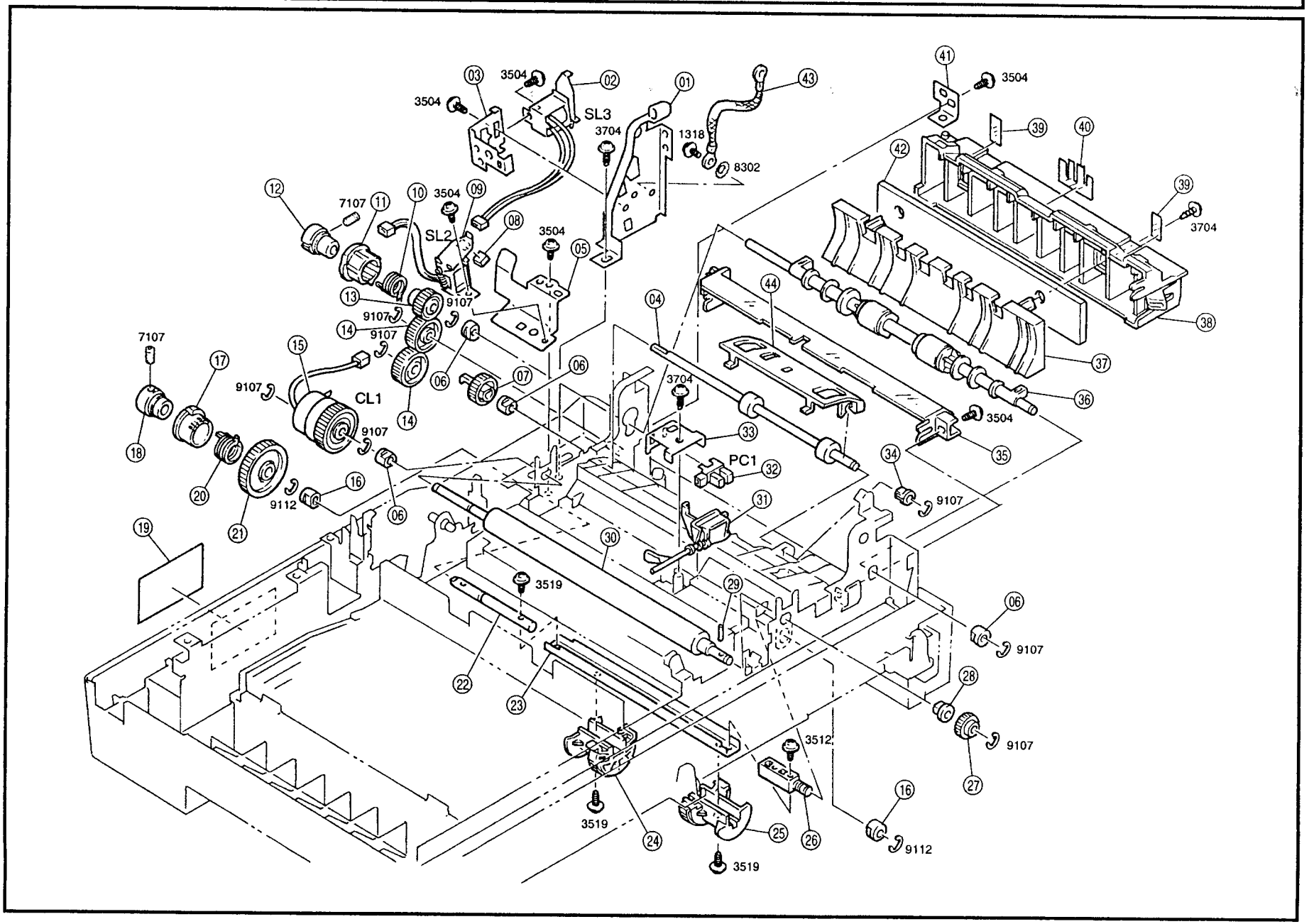
3504
SL3
3704
1318
8302
7107
SL2
9107
CL1
9112
PC1
3519
3512

INDEX	PART NO.	PART NAME	QTY	AREA	REMARKS
01AA	1159-2006-02	BRACKET	1		
02AA	9321-2610-61	SOLENOID MULTI (SL3)	1		
03AA	1159-2509-01	BRACKET	1		
04AA	1159-3520-01	ROLLER	1		
05AA	1159-3034-02	BRACKET	1		
06AA	1200-3121-07	BUSHING	4		
07AA	1159-3523-01	GEAR 24T	1		
08AA	1159-3037-01	PAD	1		
09AA	9321-2610-51	SOLENOID TAKE-UP (SL2)	1		
10AA	1159-3122-01	CLUTCH SPRING	1		
11AA	1159-3121-01	RATCHET	1		
12AA	1159-3123-01	BUSHING	1		
13AA	1159-3120-01	GEAR 27T	1		
14AA	1159-2529-01	GEAR 36T	2		
15AA	9322-1511-21	CLUTCH REGIST (CL1)	1		
16AA	1200-3134-16	BUSHING	2		
17AA	1159-3031-01	RATCHET	1		
18AA	1139-3008-01	ARBOR	1		
*19AA	1142-7302-01	LABEL CAUTION	1	2706	
20AA	1159-3032-01	CLUTCH SPRING	1		
21AA	1159-3030-01	GEAR 54T	1		
22AA	1159-3021-01	SHAFT	1		
23AA	1159-3023-01	SHAFT	1		
24AA	1159-3020-01	ROLLER	1		
25AA	1159-3022-01	ROLLER	1		
26AA	1151-3061-01	HOLDER	1		
27AA	1067-3513-01	GEAR 32T	1		
28AA	1274-2611-01	BUSHING	1		
29AA	1067-2502-01	PIN	1		
30AA	1159-3530-02	ROLLER	1		
31AA	1159-3035-01	ACTUATOR	1		
32AA	9335-1310-31	PHOTO INTERRUPTER FOR SDH (PC1)	1		
33AA	1159-3036-01	BRACKET	1		
34AA	1159-3525-02	BUSHING	1		
35AA	1159-3503-02	GUIDE PLATE	1		
36AA	1159-3114-02	ROLLER	1		
37AA	1159-3504-03	GUIDE	1		
38AA	1159-3501-03	DOOR	1		
39AA	1159-3116-01	SHEET	2		
40AA	1159-3112-01	SHEET	1		
41AA	1159-3502-01	BRACKET	1		
*42AA	1159-3505-02	PAD	1	2706	
43AA	1159-6813-01	HARNESS	1		
44AA	1159-3527-01	GUIDE PLATE	1		

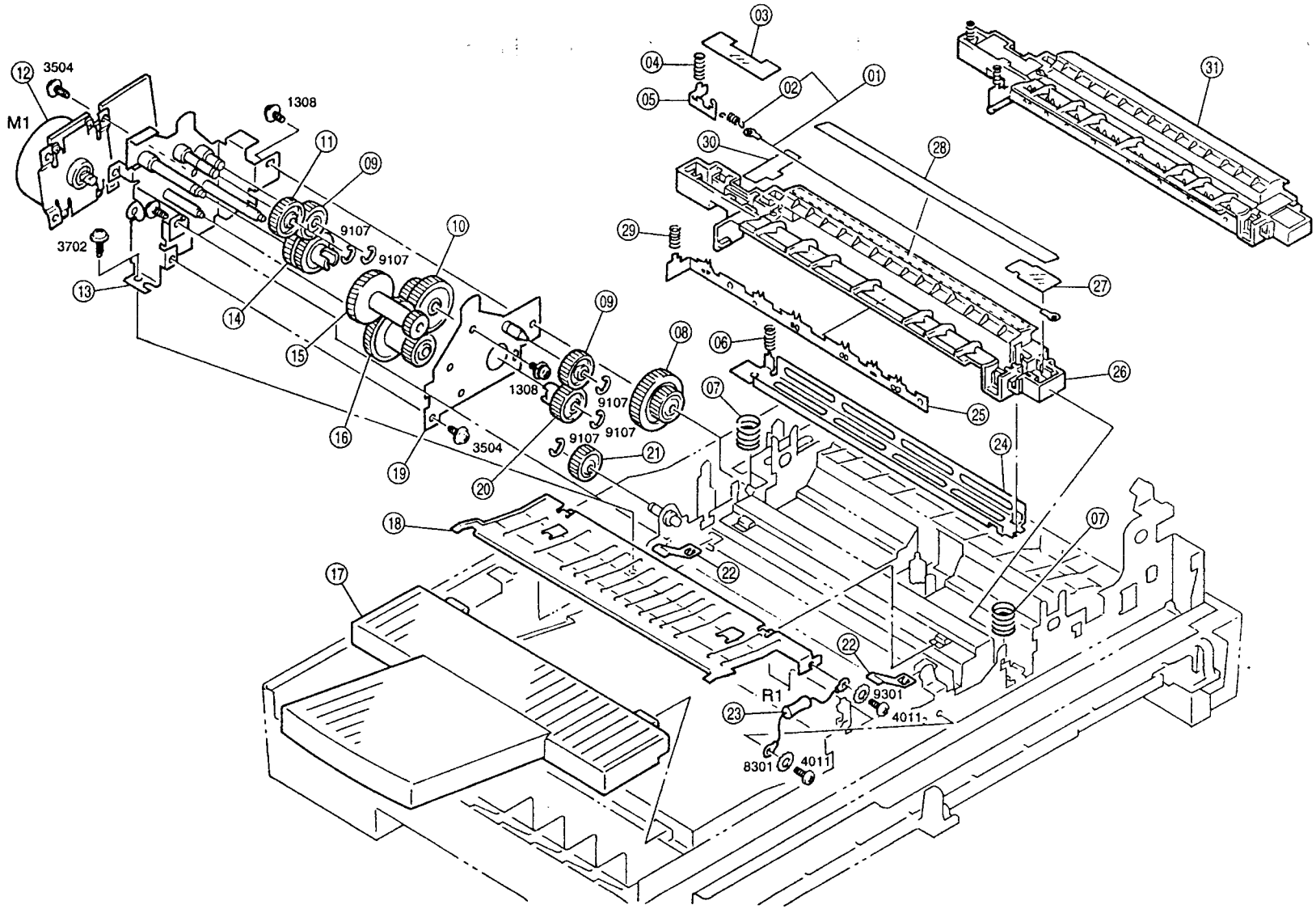

M1
3504
1308
3702
9107
9107
1308
9107
9107
9107
3504
R1
9301
4011
8301
4011

INDEX	PART NO.	PART NAME	QTY	AREA	REMARKS	INDEX	PART NO.	PART NAME	QTY	AREA	REMARKS
01AA	1159-0751-01	CORONA WIRE	1								
02AA	1159-4121-01	TENSION SPRING	1								
03AA	1159-4109-01	LID	1								
04AA	1159-4122-01	PRESSURE SPRING	1								
05AA	1159-4105-01	GROUND PLATE	1								
06AA	1159-4120-01	PRESSURE SPRING	1								
07AA	1159-4110-03	PRESSURE SPRING	2								
08AA	1159-2515-01	GEAR 27/36T	1								
09AA	1159-2519-01	GEAR 21T	2								
10AA	1159-2530-01	GEAR 24/36T	1								
11AA	1159-2526-01	GEAR 24T	1								
12AA	9314-2610-11	PWB-MOTOR MAIN (M1)	1								
13AA	1159-0203-02	BRACKET	1								
14AA	1159-2506-01	GEAR 28/64T	1								
15AA	1159-2511-01	GEAR 67/19T	1								
16AA	1159-2503-01	GEAR 20/80T	1								
17AA	1159-1008-01	TRAY	1								
18AA	1159-5737-02	GUIDE PLATE	1								
19AA	1159-0204-01	AXLE PLATE	1								
20AA	1159-2505-01	GEAR 20T	1								
21AA	1159-5732-01	GEAR 27T	1								
22AA	1159-5738-02	PLATE SPRING	2								
23AA	1159-0131-01	RESISTOR (R1)	1								
24AA	1159-4103-02	COVER	1								
25AA	1159-4117-02	NEUTRALIZING BRUSH	1								
26AA	1159-4112-02	HOLDER	1								
27AA	1159-4108-02	LID	1								
28AA	1067-4122-02	SEAL	1								
29AA	1159-4124-01	PRESSURE SPRING	1								
30AA	1159-4125-01	POLYESTER FILM	1								
31AA	1159-0410-01	TRANS CORONA UNIT	1								

16 PAPER TRAY UNIT

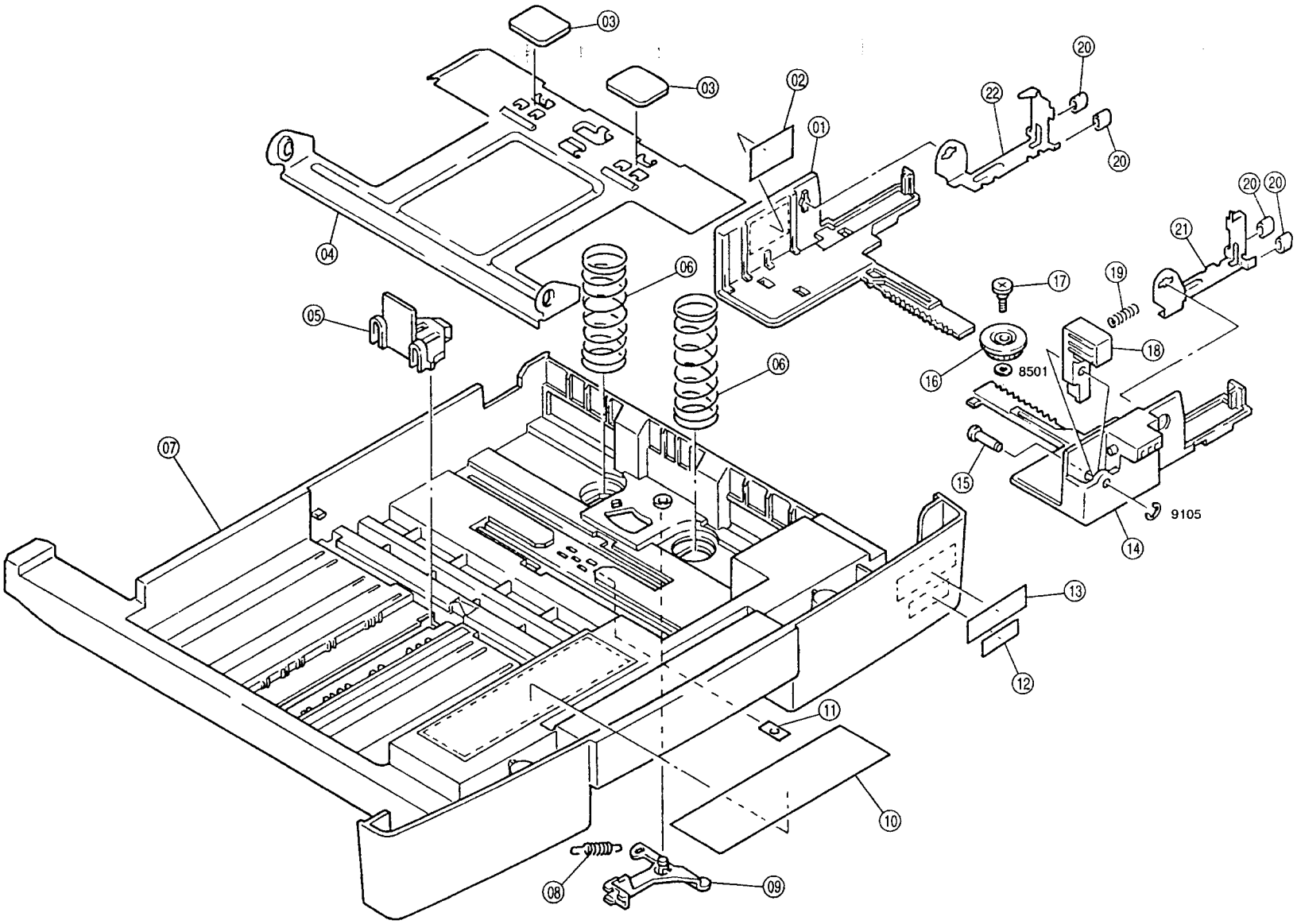

INDEX	PART NO.	PART NAME		QTY	AREA	REMARKS	INDEX	PART NO.	PART NAME	QTY	AREA	REMARKS
01AA	1159-3003-02	REGULATING PLATE		1								
02AA	1151-7308-01	LABEL MAX		1								
03AA	1159-3009-01	FRICTION SHEET		2								
04AA	1159-3006-01	LIFTING PLATE		1								
05AA	0996-3014-03	GUIDE		1								
06AA	1159-3010-02	PRESSURE SPRING		2								
07AA	1159-3001-03	CASSETTE BODY		1								
08AA	1159-3013-01	TENSION SPRING		1								
09AA	1159-3011-01	LEVER		1								
10AA	1159-7306-03	LABEL PAPER LOADING		1								
11AA	1067-3058-01	PLATE NUT		1								
*12AA	1159-7331-02	LABEL 1031	FOR SDH	1	0702							
*12BA	1159-7332-02	LABEL 1031F	FOR ORI COVER	1	0702							
13AA	1159-7315-01	LABEL CS PRO		1								
14AA	1159-3002-02	REGULATING PLATE		1								
15AA	1159-3007-01	SHAFT		1								
16AA	1067-3026-01	GEAR 20T		1								
17AA	1067-3045-01	SHOULDER SCREW		1								
18AA	1159-3008-01	LOCK LEVER		1								
19AA	1159-3012-01	PRESSURE SPRING		1								
*20AA	1159-3014-01	COLLAR		4	2706							
21AA	1159-3004-01	SEPARATOR		1								
22AA	1159-3005-01	SEPARATOR		1								

17 WIRING ACCESSORIES AND JIGS

01
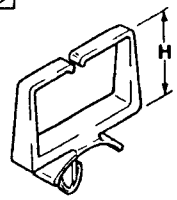

06
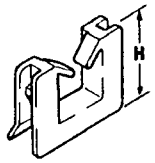

11
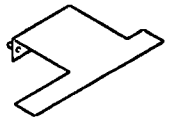

02
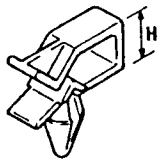

07
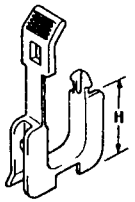

03
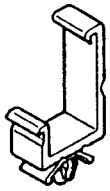

08
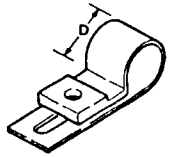

04
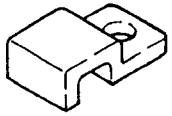

09
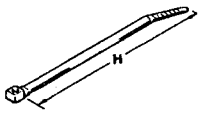

05
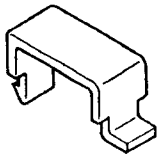

10
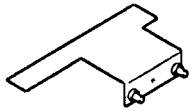

INDEX	PART NO.	PART NAME	QTY	AREA	REMARKS	INDEX	PART NO.	PART NAME	QTY	AREA	REMARKS
01AA	9384-1310-81	WIRING SADDLE 6.4H	10								
02AA	9384-1820-31	WIRING SADDLE 8.0H	1								
03AA	9384-1311-01	WIRING SADDLE 27H	5								
04AA	1139-1422-01	CORD CLAMP	1								
05AA	1065-5872-01	CORD CLAMP	1								
06AA	9384-2010-21	EDGE COVER 8.5H	7								
07AA	9384-2010-31	EDGE COVER 15.4H	1								
08AA	9384-1600-04	P-CLIP 5D	1								
09AA	9384-1821-41	CABLE TIE	2								
10AA	1159-7901-02	JIG SLIDER-FNT	1								
11AA	1159-7902-02	JIG SLIDER-RR	1								

18 SCREWS AND WASHERS

INDEX	PART NO.	PART NAME	ILLUST
0227	9754-0308-08	SPRING ROLL PIN	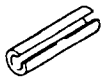
0230	9754-1608-08		
1109	9642-0304-13	SCREW	
1111	9642-0306-13		
1141	9642-0305-13		
1147	9642-0203-13		
1281	9644-0306-01	SCREW	
1302	9646-0305-13	SCREW	
1305	9646-0306-13		
1308	9646-0308-13		
1309	9646-0310-13		
1310	9646-0312-13		
1318	9646-0408-13		
1606	9654-0306-07	SCREW	
1634	9654-0304-13		
3302	9732-0306-07	TAPPING SCREW	
3334	9732-0434-13		
3402	9733-0306-13	TAPPING SCREW	
3403	9733-0308-13		
3504	9735-0308-13	TAPPING SCREW	
3505	9735-0310-13		
3512	9735-0306-07		
3519	9735-0312-13		
3524	9735-0316-13		

INDEX	PART NO.	PART NAME	ILLUST
3606	9738-0306-13	TAPPING SCREW	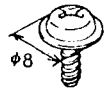
3607	9738-0308-07		
3701	9739-0408-13	TAPPING SCREW	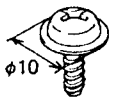
3702	9739-0410-13		
3703	9739-0412-13		
3704	9739-0308-13		
3705	9739-0306-13		
3709	9739-0310-13		
3727	9739-0308-14		
3904	9742-0305-07	TAPPING SCREW	
3924	9742-0308-14		
4011	9743-0308-13	TAPPING SCREW	
4020	9743-0408-14		
4021	9743-0308-14		
4025	9743-0306-14		
7107	9684-0406-08	SET SCREW	
8301	9712-0300-13	WASHER	
8302	9712-0400-13		
8306	9712-0300-01		
8402	9715-0300-01	WASHER	
8501	9716-0300-01		
9105	9721-0300-01	RETAINING RING	
9107	9721-0400-01		
9112	9721-0600-01		
9125	9721-0400-13		
9128	9721-0500-08		

INDEX	PART NO.	PART NAME	ILLUST

19 NUMERICAL INDEX

PART NO.	FIG.	INDEX	QTY
0996-3014-03	16	05AA	1
1038-4426-01	04	10AA	1
1045-5401-01	02	09AA	1
1050-4707-02	12	40AA	2
1052-2306-01	06	20AA	1
1052-2306-01	08	33AA	1
1053-3869-01	01	07AA	1
1053-3869-01	02	30AA	1
1065-1360-01	01	08AA	1
1065-1360-01	02	29AA	1
1065-5872-01	17	05AA	1
1066-1120-01	04	29AA	1
1067-1737-12	04	24AA	1
1067-1814-01	04	06AA	1
1067-1841-01	04	34AA	1
1067-1907-01	04	14AA	1
1067-2501-01	04	39AA	4
1067-2502-01	14	29AA	1
1067-3003-01	04	33AA	1
1067-3005-01	04	37AA	1
1067-3026-01	01	26AA	1
1067-3026-01	16	16AA	1
1067-3045-01	16	17AA	1
1067-3058-01	16	11AA	1
1067-3502-01	11	23AA	1
1067-3513-01	14	27AA	1
1067-3517-01	11	17AA	2
1067-4122-02	15	28AA	1
1067-5035-01	11	27AA	1
1067-5044-02	09	03AA	1
1067-5313-02	09	27AA	1
1067-5327-01	09	17AA	1
1067-5509-01	10	09AA	1
1080-7303-01	08	12AA	1
1080-7303-01	13	11AA	1
1132-5034-01	11	29AA	1
1132-5306-01	09	18AA	1
1132-5311-01	09	26AA	1
1132-5312-01	09	28AA	1
1132-5533-01	09	12AA	1
1136-2131-03	07	05AA	1
1136-2131-03	08	24AA	1
1136-6052-12	10	22AA	1
1138-7810-01	13	13AA	1
1139-1039-01	02	21AA	1
1139-1422-01	17	04AA	1
1139-1608-01	05	17AA	2
1139-3008-01	14	18AA	1
1139-5250-01	11	02AA	2
1139-7332-01	01	18AA	1
1142-7302-01	14	19AA	1
1144-0168-01	11	31AA	1
1151-3061-01	14	26AA	1
1151-7308-01	16	02AA	1
1159-0101-05	08	01AA	1
1159-0103-01	03	11AA	1
1159-0104-03	13	17AA	1
1159-0105-01	07	18AA	1
1159-0106-02	13	04AA	1
1159-0107-03	13	17BA	1
1159-0108-02	13	04BA	1
1159-0131-01	15	23AA	1
1159-0152-02	09	10AA	1
1159-0154-01	11	09AA	1
1159-0161-02	03	25AA	1
1159-0162-01	11	03AA	1
1159-0181-02	12	29AA	1
1159-0182-02	12	07AA	1
1159-0201-02	13	20AA	1
1159-0202-03	08	34AA	1
1159-0203-02	15	13AA	1
1159-0204-01	15	19AA	1
1159-0231-01	04	01AA	1
1159-0232-02	03	02AA	1
1159-0380-01	01	13CA	1
1159-0381-01	01	13BA	1
1159-0382-01	01	13AA	1
1159-0395-01	12	43BA	1
1159-0396-01	12	43AA	1
1159-0410-01	15	31AA	1
1159-0445-01	10	47AA	1
1159-0751-01	15	01AA	1
1159-0752-01	09	02AA	1
1159-0753-01	11	13AA	1
1159-0754-01	11	32AA	1
1159-1001-02	01	17AA	1
1159-1002-02	01	12AA	1
1159-1003-02	01	25AA	1
1159-1004-02	01	10AA	1
1159-1005-02	01	05AA	1
1159-1006-02	01	14AA	1
1159-1008-01	15	17AA	1
1159-1009-01	01	15AA	1
1159-1010-01	01	04AA	1
1159-1204-03	06	19AA	1
1159-1601-02	02	28AA	1
1159-1602-02	02	27AA	1
1159-1603-01	01	09AA	1
1159-1605-01	06	01AA	1
1159-1608-01	01	06AA	1
1159-1610-01	06	02AA	1
1159-1611-02	01	01AA	1
1159-1612-02	01	02AA	2
1159-1613-02	01	03AA	1
1159-1613-02	02	20AA	1
1159-1614-01	08	19AA	1
1159-1615-01	08	17AA	1
1159-1616-01	08	20AA	1
1159-1617-01	08	18AA	1
1159-1701-02	04	22AA	1
1159-1702-02	03	13AA	2
1159-1706-02	04	30AA	1
1159-1708-01	03	18AA	1
1159-1709-01	04	32AA	1
1159-1712-01	04	42AA	1
1159-1713-01	03	06AA	1
1159-1715-01	02	05AA	1
1159-1716-01	04	03AA	1
1159-1728-01	02	06AA	2
1159-1729-01	03	04AA	1
1159-1730-01	03	09AA	1
1159-1750-01	08	40AA	1
1159-1753-01	08	39AA	2
1159-1801-03	02	08AA	1
1159-1802-02	04	43AA	1
1159-1804-01	04	07AA	1
1159-1806-01	03	15AA	1
1159-1807-01	02	22AA	1
1159-1810-02	03	23AA	1
1159-1811-01	04	19AA	3
1159-1812-01	02	12AA	2
1159-1812-01	03	12AA	2
1159-1813-02	04	48AA	1
1159-1814-01	03	03AA	1
1159-1815-01	04	16AA	1
1159-1817-01	03	21AA	1
1159-1818-01	04	13AA	1
1159-1819-01	04	21AA	1
1159-1820-01	04	15AA	1
1159-1821-01	04	08AA	1
1159-1822-03	03	27AA	1
1159-1823-03	02	23AA	1
1159-1824-01	02	01AA	1
1159-1825-02	02	18AA	1
1159-1826-02	02	19AA	1
1159-1827-01	04	35AA	1
1159-1828-01	04	11AA	1
1159-1829-01	02	14AA	1
1159-1830-01	02	07AA	1
1159-1831-01	04	23AA	1
1159-1832-02	03	20AA	1
1159-1833-01	02	17AA	1
1159-1834-01	02	16AA	1
1159-1835-02	04	04AA	1
1159-1836-01	03	08AA	1
1159-1837-01	04	12AA	4
1159-1838-01	04	36AA	1
1159-1901-02	03	26AA	1
1159-1902-02	04	44AA	1
1159-1904-01	03	14AA	1
1159-1905-01	04	18AA	2
1159-1906-02	04	40AA	1
1159-1907-02	04	38AA	1
1159-1908-01	03	24AA	1
1159-1910-01	04	17AA	2
1159-1911-01	02	11AA	2
1159-1912-01	04	27AA	1
1159-1913-04	02	03AA	2
1159-1920-01	04	09AA	1
1159-1925-01	04	45AA	1
1159-1926-01	04	46AA	1
1159-1927-02	04	26AA	1
1159-1928-01	04	28AA	1
1159-1930-01	03	28AA	1
1159-1931-01	03	16AA	1
1159-1932-01	02	02AA	1
1159-1933-01	04	47AA	1
1159-1935-01	03	30AA	1
1159-1936-01	02	10AA	1
1159-1937-01	02	13AA	3
1159-1938-01	04	05AA	4
1159-1939-01	04	31AA	2
1159-1940-01	02	04AA	2
1159-1941-02	04	41AA	1
1159-1942-01	03	22AA	1
1159-1943-01	02	26AA	1
1159-2005-02	13	28AA	1
1159-2006-02	14	01AA	1
1159-2007-01	06	15AA	1
1159-2009-01	06	10AA	1
1159-2010-01	06	28AA	1
1159-2011-02	06	23AA	1
1159-2012-01	06	18AA	1
1159-2013-01	06	12AA	1
1159-2014-01	06	16AA	1
1159-2017-02	13	29AA	1
1159-2018-02	13	30AA	1
1159-2020-02	08	23AA	1
1159-2021-01	13	30BA	1
1159-2022-02	13	29BA	1
1159-2023-02	06	13AA	1
1159-2024-01	06	21AA	1
1159-2024-01	08	32AA	1
1159-2025-01	13	23AA	2
1159-2027-02	08	13BA	1
1159-2028-02	08	03AA	1
1159-2029-01	06	22AA	1
1159-2032-01	08	13AA	1
1159-2101-01	06	09AA	1
1159-2103-03	13	01AA	1
1159-2104-01	06	08AA	1
1159-2105-01	13	25AA	1
1159-2106-02	13	15AA	1
1159-2107-03	13	07AA	1
1159-2108-02	01	11AA	1
1159-2109-02	13	05AA	1
1159-2110-01	13	08AA	1
1159-2114-02	13	03AA	1
1159-2115-01	13	06AA	1
1159-2116-02	13	16AA	1
1159-2118-01	13	10AA	1
1159-2120-01	13	09AA	1
1159-2503-01	15	16AA	1
1159-2505-01	15	20AA	1
1159-2506-01	15	14AA	1
1159-2508-01	08	26AA	1
1159-2509-01	14	03AA	1
1159-2511-01	15	15AA	1
1159-2515-01	15	08AA	1
1159-2519-01	08	30AA	2
1159-2519-01	15	09AA	2
1159-2520-01	08	29AA	1
1159-2521-01	08	31AA	1
1159-2523-01	08	28AA	1
1159-2524-01	08	27AA	1
1159-2525-01	08	25AA	2
1159-2526-01	15	11AA	1
1159-2527-03	13	02AA	1
1159-2529-01	14	14AA	2
1159-2530-01	15	10AA	1
1159-3001-03	16	07AA	1
1159-3002-02	16	14AA	1
1159-3003-02	16	01AA	1
1159-3004-01	16	21AA	1
1159-3005-01	16	22AA	1
1159-3006-01	16	04AA	1
1159-3007-01	16	15AA	1
1159-3008-01	16	18AA	1
1159-3009-01	16	03AA	2
1159-3010-02	16	06AA	2
1159-3011-01	16	09AA	1
1159-3012-01	16	19AA	1
1159-3013-01	16	08AA	1
1159-3014-01	05	39AA	1
1159-3014-01	16	20AA	4
1159-3016-01	13	27AA	1
1159-3020-01	14	24AA	1
1159-3021-01	14	22AA	1
1159-3022-01	14	25AA	1
1159-3023-01	14	23AA	1
1159-3030-01	14	21AA	1
1159-3031-01	14	17AA	1
1159-3032-01	14	20AA	1
1159-3034-02	14	05AA	1
1159-3035-01	14	31AA	1
1159-3036-01	14	33AA	1
1159-3037-01	14	08AA	1
1159-3101-02	01	20AA	1
1159-3102-02	01	28AA	1
1159-3103-02	01	29AA	1
1159-3104-03	01	27AA	2
1159-3110-03	01	19AA	1
1159-3111-02	01	22AA	1
1159-3112-01	14	40AA	1
1159-3113-01	01	21AA	2
1159-3114-02	14	36AA	1
1159-3115-01	01	23AA	2
1159-3116-01	14	39AA	2
1159-3120-01	14	13AA	1
1159-3121-01	14	11AA	1

PART NO.	FIG.	INDEX	QTY
1159-3122-01	14	10AA	1
1159-3123-01	14	12AA	1
1159-3501-03	14	38AA	1
1159-3502-01	14	41AA	1
1159-3503-02	14	35AA	1
1159-3504-03	14	37AA	1
1159-3505-02	14	42AA	1
1159-3506-01	13	26AA	1
1159-3511-01	06	27AA	1
1159-3512-01	06	29AA	1
1159-3520-01	14	04AA	1
1159-3521-02	06	25AA	2
1159-3522-01	06	26AA	2
1159-3523-01	14	07AA	1
1159-3524-02	06	24AA	1
1159-3525-02	14	34AA	1
1159-3527-01	14	44AA	1
1159-3530-02	14	30AA	1
1159-3531-01	11	21AA	1
1159-3532-01	11	16AA	2
1159-3533-02	11	15AA	1
1159-3534-02	11	22AA	1
1159-3535-01	11	24AA	1
1159-3536-01	11	18AA	1
1159-3537-01	13	31AA	1
1159-3538-02	11	34AA	1
1159-3539-01	11	35AA	3
1159-4003-01	10	25AA	1
1159-4004-01	10	24AA	1
1159-4005-01	10	01AA	1
1159-4006-01	10	04AA	1
1159-4007-02	10	26AA	1
1159-4008-01	10	03AA	1
1159-4009-01	10	02AA	1
1159-4012-01	08	04AA	1
1159-4014-01	10	27AA	1
1159-4021-03	08	05AA	1
1159-4022-02	08	14AA	1
1159-4023-01	08	07AA	1
1159-4024-01	08	06AA	1
1159-4025-03	08	09AA	1
1159-4026-01	08	15AA	1
1159-4030-01	10	42AA	1
1159-4031-03	10	23AA	1
1159-4032-02	10	43AA	1
1159-4033-02	10	41AA	2
1159-4034-01	10	45AA	1
1159-4035-01	10	36AA	1
1159-4036-01	10	46AA	1
1159-4103-02	15	24AA	1
1159-4105-01	15	05AA	1
1159-4108-02	15	27AA	1
1159-4109-01	15	03AA	1
1159-4110-03	15	07AA	2
1159-4112-02	15	26AA	1
1159-4113-01	11	19AA	1
1159-4114-01	06	17AA	1
1159-4117-02	15	25AA	1
1159-4119-01	11	20AA	1
1159-4120-01	08	08AA	6
1159-4120-01	15	06AA	1
1159-4121-01	15	02AA	1
1159-4122-01	15	04AA	1
1159-4123-01	10	31AA	2
1159-4124-01	15	29AA	1
1159-4125-01	15	30AA	1
1159-4404-01	10	20AA	1
1159-4405-01	10	07AA	1
1159-5002-03	11	04AA	1
1159-5003-04	11	01AA	1
1159-5010-01	09	07AA	1
1159-5011-01	09	05AA	1
1159-5012-01	09	32AA	1
1159-5013-01	11	30AA	1
1159-5014-02	11	06AA	1
1159-5016-01	11	28AA	1
1159-5017-01	09	11AA	1
1159-5018-04	09	01AA	1
1159-5021-01	11	26AA	1
1159-5022-02	11	07AA	1
1159-5024-01	11	33AA	1
1159-5025-02	11	05AA	1
1159-5026-01	09	06AA	1
1159-5027-01	11	08AA	1
1159-5028-01	09	04AA	1
1159-5029-01	11	25AA	1
1159-5030-01	11	12AA	1
1159-5031-01	10	21AA	2
1159-5032-01	09	08AA	1
1159-5036-01	11	11AA	2
1159-5109-02	11	10AA	1
1159-5304-02	09	15AA	1
1159-5305-01	09	20AA	1
1159-5307-01	09	23AA	1
1159-5308-01	09	24AA	1
1159-5309-02	09	29AA	1
1159-5311-01	09	14AA	1
1159-5313-01	09	21AA	1
1159-5315-01	09	30AA	1
1159-5317-01	09	22AA	1
1159-5352-01	09	25AA	1
1159-5501-05	10	05AA	1
1159-5502-01	10	13AA	1
1159-5504-03	10	15AA	1
1159-5506-04	10	28AA	1
1159-5509-02	10	06AA	1
1159-5510-01	10	08AA	1
1159-5511-01	10	12AA	1
1159-5515-04	10	19AA	1
1159-5518-02	10	29AA	1
1159-5522-02	10	11AA	1
1159-5524-01	10	10AA	1
1159-5525-01	08	35AA	2
1159-5526-04	09	09AA	1
1159-5528-03	10	30AA	1
1159-5530-02	11	14AA	2
1159-5531-02	10	16AA	1
1159-5532-02	10	32AA	1
1159-5533-01	10	33AA	1
1159-5535-01	10	39AA	1
1159-5537-01	10	38AA	1
1159-5538-01	10	18AA	1
1159-5539-01	10	40AA	1
1159-5540-01	10	37AA	1
1159-5541-01	10	35AA	1
1159-5542-01	10	34AA	1
1159-5555-02	09	16AA	1
1159-5557-01	09	13AA	1
1159-5702-01	12	27AA	1
1159-5707-02	12	03AA	1
1159-5710-01	12	11AA	1
1159-5712-01	12	12AA	1
1159-5713-01	12	13AA	1
1159-5714-01	12	32AA	1
1159-5719-01	12	33AA	2
1159-5720-01	12	37AA	1
1159-5723-02	12	41AA	2
1159-5725-01	12	19AA	1
1159-5727-01	12	17AA	1
1159-5732-01	15	21AA	1
1159-5735-02	12	24AA	1
1159-5736-01	12	25AA	1
1159-5737-02	15	18AA	1
1159-5738-02	15	22AA	2
1159-5739-01	12	23AA	1
1159-5740-03	12	15AA	2
1159-5741-02	12	04AA	2
1159-5742-01	12	14AA	2
1159-5743-01	12	06AA	2
1159-5746-01	12	10AA	1
1159-5747-01	12	02AA	1
1159-5750-02	12	26AA	1
1159-5755-01	12	05AA	1
1159-5756-01	12	22AA	1
1159-5757-02	12	26BA	1
1159-5758-01	12	34AA	2
1159-5760-01	12	31AA	1
1159-5764-01	12	16AA	2
1159-5808-02	12	01AA	1
1159-6052-01	06	14AA	1
1159-6054-01	10	44AA	1
1159-6201-03	13	14AA	1
1159-6202-02	13	14BA	1
1159-6205-03	08	10AA	1
1159-6801-01	12	39AA	1
1159-6802-02	13	24AA	1
1159-6803-01	12	28AA	1
1159-6804-02	08	11AA	1
1159-6805-01	08	37AA	1
1159-6808-01	06	11AA	1
1159-6810-02	12	20AA	1
1159-6811-01	12	36AA	1
1159-6812-03	10	17AA	1
1159-6813-01	14	43AA	1
1159-6814-02	03	07AA	1
1159-6815-01	03	29AA	1
1159-6816-01	12	08AA	1
1159-6817-02	03	10AA	1
1159-6818-01	03	05AA	1
1159-6819-01	08	36AA	1
1159-6820-01	10	14AA	1
1159-7306-03	16	10AA	1
1159-7307-01	01	16AA	1
1159-7308-01	02	24AA	1
1159-7309-01	02	15AA	1
1159-7310-02	02	25AA	1
1159-7315-01	16	13AA	1
1159-7326-01	12	42AA	1
1159-7327-01	01	24AA	1
1159-7328-01	01	24BA	1
1159-7331-02	16	12AA	1
1159-7332-02	16	12BA	1
1159-7333-01	12	35AA	1
1159-7801-02	05	15AA	2
1159-7802-02	05	13AA	2
1159-7803-01	05	19AA	2
1159-7804-02	07	13AA	1
1159-7805-01	05	10AA	1
1159-7806-02	05	04AA	1
1159-7807-01	05	01AA	2
1159-7808-01	05	06AA	1
1159-7809-01	05	05AA	1
1159-7810-01	07	01AA	1
1159-7811-01	07	02AA	1
1159-7812-02	07	08AA	1
1159-7813-02	05	34AA	1
1159-7814-02	05	23AA	1
1159-7815-02	05	21AA	1
1159-7816-01	05	35AA	1
1159-7817-01	05	26AA	1
1159-7818-01	05	30AA	1
1159-7819-01	05	30BA	1
1159-7820-01	05	25AA	2
1159-7821-02	05	31AA	1
1159-7822-02	05	33AA	1
1159-7823-02	05	22AA	1
1159-7824-01	05	36AA	1
1159-7825-01	05	18AA	1
1159-7826-02	05	20AA	2
1159-7833-01	05	32AA	1
1159-7834-01	05	27AA	1
1159-7835-01	05	29AA	1
1159-7836-01	07	16AA	2
1159-7837-01	07	12AA	2
1159-7838-01	05	28AA	1
1159-7839-01	05	16AA	1
1159-7840-01	05	14AA	1
1159-7841-01	07	11AA	1
1159-7842-01	07	10AA	1
1159-7843-01	07	17AA	1
1159-7844-01	05	24AA	4
1159-7845-01	07	04AA	1
1159-7846-01	07	03AA	1
1159-7847-01	05	37AA	1
1159-7848-01	07	15AA	1
1159-7849-01	05	38AA	1
1159-7851-01	06	07AA	1
1159-7852-01	07	06AA	1
1159-7853-01	05	12AA	1
1159-7854-01	05	07AA	1
1159-7855-01	05	08AA	1
1159-7856-02	05	09AA	4
1159-7857-02	05	11AA	4
1159-7857-02	07	09AA	2
1159-7858-01	06	03AA	2
1159-7859-01	05	02AA	2
1159-7862-01	05	03AA	2
1159-7863-01	07	01BA	1
1159-7864-01	07	01CA	1
1159-7865-02	06	04AA	4
1159-7866-01	07	07AA	1
1159-7867-01	06	06AA	1
1159-7901-02	17	10AA	1
1159-7902-02	17	11AA	1
1200-3121-07	14	06AA	4
1200-3134-16	14	16AA	2
1200-3201-09	12	18AA	2
1200-3221-06	09	31AA	1
1274-2611-01	14	28AA	1
1500-2620-01	12	09AA	1
9313-1610-81	08	16AA	1
9313-1610-91	08	38AA	1
9313-1611-01	08	21AA	1
9314-2610-11	03	01AA	1
9314-2610-11	15	12AA	1
9321-2310-22	09	19AA	1
9321-2610-51	14	09AA	1
9321-2610-61	14	02AA	1
9321-2610-71	04	02AA	1
9322-1511-21	04	20AA	1
9322-1511-21	14	15AA	1
9326-2320-21	06	05AA	1
9332-5610-51	13	21AA	1
9334-1610-21	12	38AA	1
9334-2610-11	03	19AA	1
9335-1310-31	03	17AA	2
9335-1310-31	04	25AA	1
9335-1310-31	06	30AA	1
9335-1310-31	07	14AA	1
9335-1310-31	08	22AA	1

[illegible]	[illegible]	[illegible]	[illegible]		[illegible]	[illegible]	[illegible]		[illegible]	[illegible]	[illegible]		[illegible]	[illegible]	[illegible]		[illegible]	[illegible]	[illegible]
1159-5003-04	11	01AA	1		1159-[illegible]32-01	15	21AA	1		1159-7816-01	05	[illegible]35AA	1		9335-1310-31	07	14AA	1	
										1159-7817-01	05	[illegible]6AA	1		9335-1310-31	08	22AA	1	

PART NO.	FIG.	INDEX	QTY		PART NO.	FIG.	INDEX	QTY		PART NO.	FIG.	INDEX	QTY		PART NO.	FIG.	INDEX	QTY	
9335-1310-31	12	21AA	1																
9335-1310-31	14	32AA	1																
9346-3610-31	13	19BA	2																
9346-3710-11	13	22AA	1																
9346-3720-51	13	19AA	1																
9372-2610-42	12	30AA	1																
9381-4310-81	13	18BA	1																
9381-4610-31	13	18AA	1																
9384-1310-81	17	01AA	10																
9384-1311-01	17	03AA	5																
9384-1600-04	17	08AA	1																
9384-1820-31	17	02AA	1																
9384-1821-41	17	09AA	2																
9384-1900-56	08	02AA	1																
9384-1900-56	13	12AA	2																
9384-2010-21	17	06AA	7																
9384-2010-31	17	07AA	1																

PART NO.	OTHER MODELS IN WHICH THIS PART IS BEING USED	PART NO.	OTHER MODELS IN WHCH THIS PART IS BEING USED	PART NO.	OTHER MODELS IN WHICH THIS PART IS BEING USED
0996-3014-03	EP1030/1030F	9321-2310-22	EP1030/1030F/8015/6001		
1038-4426-01	EP1030/1030F	9321-2610-51	EP1030/1030F		
1045-5401-01	EP1030/1030F	9321-2610-71	EP1030/1030F		
1050-4707-02	EP1030/1030F	9322-1511-21	EP1030/1030F		
1052-2306-01	EP1030/1030F/8015/6001/2080	9326-2320-21	EP1030/1030F/8015/6001		
1053-3869-01	EP1030/1030F/2080/2010/1083	9332-5610-51	EP1030/1030F		
1065-1360-01	EP1030/1030F/2080/2010/1083	9334-1610-21	EP1030/1030F		
1065-5872-01	EP1030/1030F/8015/6001/2080	9334-2610-11	EP1030/1030F/8015/6001/5000		
1066-1120-01	EP1030/1030F	9335-1310-31	EP1030/1030F/8015/6001/5000		
1067-1737-12	EP1030/1030F	9346-3610-31	EP1030/1030F/2080		
1067-1814-01	EP1030/1030F	9346-3710-11	EP1030/1030F		
1067-1841-01	EP1030/1030F	9346-3720-51	EP1030/1030F/5000/2080/2010		
1067-1907-01	EP1030/1030F	9372-2610-42	EP1030/1030F		
1067-2501-01	EP1030/1030F/5000/2080	9381-4310-81	EP1030/1030F/8015/6001/5000		
1067-2502-01	EP1030/1030F	9381-4610-31	EP1030/1030F/6001/5000/2080		
1067-3003-01	EP1030/1030F	9384-1310-81	EP1030/1030F/8015/6001/5000		
1067-3005-01	EP1030/1030F	9384-1311-01	EP1030/1030F/8015/6001/5000		
1067-3026-01	EP1030/1030F	9384-1600-04	EP1030/1030F/8015/6001/5000		
1067-3045-01	EP1030/1030F	9384-1820-31	EP1030/1030F/8015/6001/2080		
1067-3058-01	EP1030/1030F	9384-1821-41	EP1030/1030F/4230		
1067-3502-01	EP1030/1030F	9384-1900-56	EP1030/1030F/8015/6001/5000		
1067-3513-01	EP1030/1030F	9384-2010-21	EP1030/1030F/8015/6001/5000		
1067-3517-01	EP1030/1030F/1050, CF900	9384-2010-31	EP1030/1030F/8015/6001/5000		
1067-4122-02	EP1030/1030F				
1067-5035-01	EP1030/1030F				
1067-5044-02	EP1030/1030F				
1067-5313-02	EP1030/1030F				
1067-5327-01	EP1030/1030F				
1067-5509-01	EP1030/1030F/2080/2010/1083				
1080-7303-01	EP1030/1030F				
1132-5034-01	EP1030/1030F				
1132-5306-01	EP1030/1030F				
1132-5311-01	EP1030/1030F				
1132-5312-01	EP1030/1030F				
1132-5533-01	EP1030/1030F				
1136-2131-03	EP1030/1030F/8015/6001/2080				
1136-6052-12	EP1030/1030F/5000/2080/2010				
1138-7810-01	EP1030/1030F				
1139-1039-01	EP1030/1030F/5000/2080/2010				
1139-1422-01	EP1030/1030F/2080/2010/1083				
1139-1608-01	EP1030/1030F/5000/2080/2010				
1139-3008-01	EP1030/1030F/2010/1083				
1139-5250-01	EP1030/1030F/2080/2010/1083				
1139-7332-01	EP1030/1030F/2080/2010/1083				
1142-7302-01	EP1030/1030F/5000/2080/2010				
1144-0168-01	EP1030/1030F, CF900				
1151-3061-01	EP1030/1030F				
1151-7308-01	EP1030/1030F/2010/1083				
1200-3121-07	EP1030/1030F/2010/1083				
1200-3134-16	EP1030/1030F/8015/6001/2080				
1200-3201-09	EP1030/1030F				
1200-3221-06	EP1030/1030F/2050				
1274-2611-01	EP1030/1030F/8015/6001/5000				
1500-2620-01	EP1030/1030F				
9313-1610-91	EP1030/1030F				
9313-1611-01	EP1030/1030F				
9314-2610-11	EP1030/1030F/2010/1083				

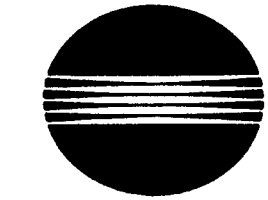

MINOLTA

Copyright
1997 MINOLTA Co.,Ltd.
Printed in Japan

1159-7995-21 97096250