EP1030/1030F

PARTS MANUAL

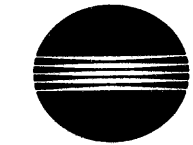

MINOLTA

PREFACE

1. The part numbers listed in Parts Manual are those which were assigned to the parts making up the machine at the time machine was originally introduced onto the market.

2. Parts whose numbers are preceded by an asterisk in the Index Column on the List Page are parts to be used in only certain market areas. Therefore, please check the number in the Area cloumn on the List Page and then compare it with the numbers given in the Area Chart on page II to find out which part number is applicable to your own ares.
   NOTE: Parts for only certain Market Areas: The part numbers for these parts vary according to market area. In orther cases, these parts are used in only restricted areas.

3. The Index Number on the List Page is composed of two numbers and two letters. Generally, only A is used as the first letter of the two letters. However, sometimes B, C, D, ets. are used when one part in the illustration, such as an electrical parts or a part which varies according to market ares, has two or more part numbers. The second of the two letters represents themodification history of that part.

4. The Ares Number is listed in the Ares Column for only those parts used in certain market areas. This Area Number represents the ares listed opposite to It in the Chrat given on Page II. Parts having no Area Number listed in the Area Column can be used in all market areas.

5. In the exploded views in this parts manual parts (Screws & Washes, etc...) which are indicated with a "four-digit" numbers are listed in numerical order in the section "SCREWS AND WASHERS". Please check these "four-digit"numbers with the part numbers ("ten-digit" number) which should be used for ordering the part.

6. All parts numbers consist of "ten-digit" wtich should all be quoted when ordering a part. The price of parts can be obtained by referring to the "Parts Price List" which is separately issued.

7. All infomation contained in this parts manual is subject to change.

AREA CAHRT

AREA No.	AREA	AREA No.	AREA
0702	EXCEPT USA/CANADA	2612	220/240V
0703	EXCEPT EUROPE	2619	220/240V (EXCEPT EUROPE)
2402	METRIC (EXCEPT JAPAN/EUROPE)	2704	USA/CANADA
2505	115/120/127V	2706	EUROPE

We recommend that you cross out from your Parts Manuals those parts numbers which do not apply to your area so that no error is made when ordering parts.

CONTENTS

1. HOUSING 1
2. HOUSING (SDH) 3
3. PAPER TAKE-UP SECTION (SDH) 5
4. PAPER TRANSPORT SECTION (SDH) 7
5. EXPOSURE LAMP SECTION 9
6. OPTICAL FRAMES 11
7. LENS SECTION 13
8. OPTICAL DRIVE SECTION 15
9. IMAGING UNIT I 17
10. IMAGING UNIT II 19
11. IMAGING UNIT III 21
12. FUSING SECTION 23
13. FRAMES 25
14. PAPER TAKE-UP SECTION 27
15. PAPER TRANSPORT SECTION 29
16. PAPER TRAY UNIT 31
17. WIRING ACCESSORIES AND JIGS 33
18. SCREWS AND WASHERS 35
19. NUMERICAL INDEX 36
20. COMMONLY USED PARTS 38

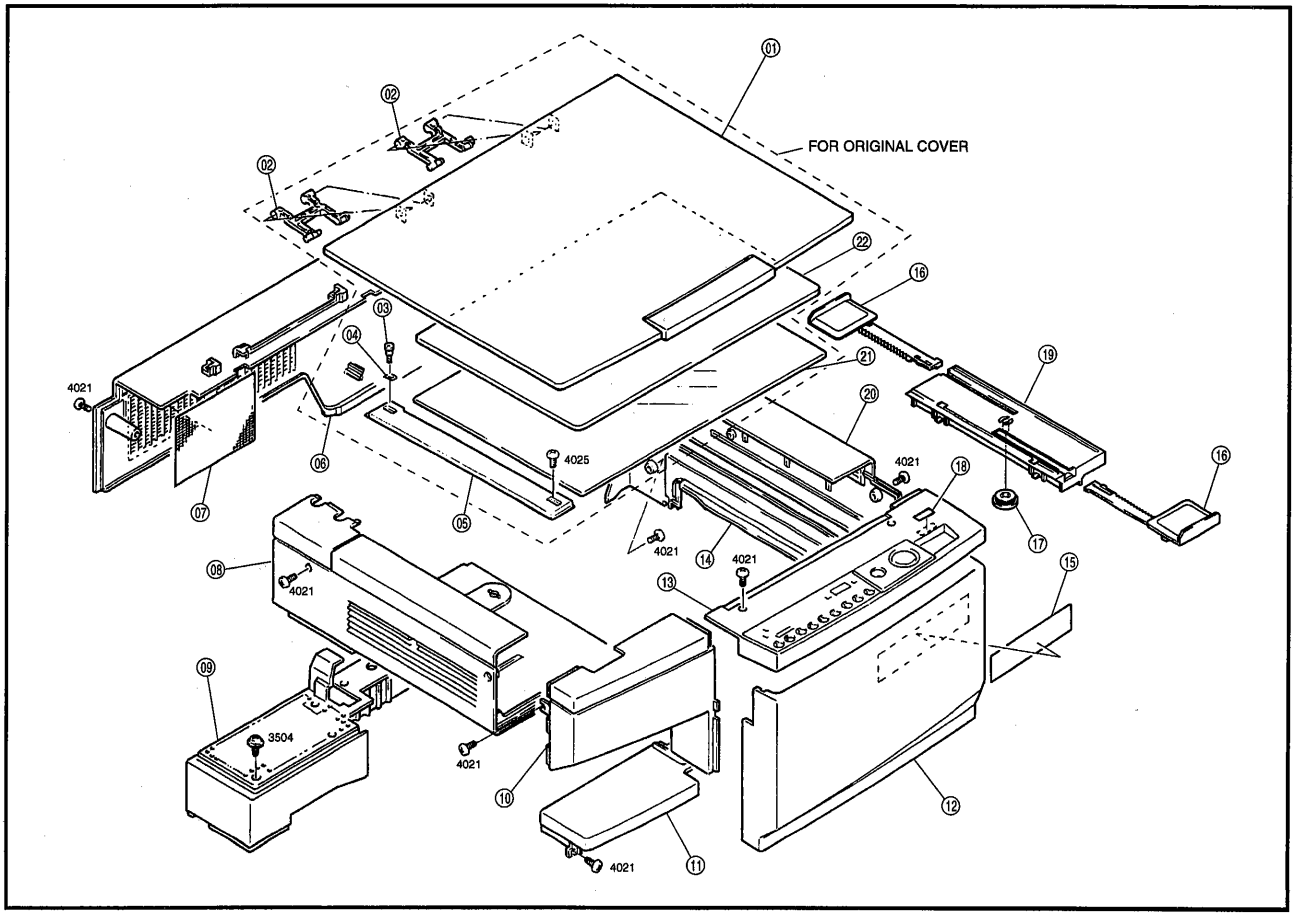
01
FOR ORIGINAL COVER
02
02
22
16
03
04
21
19
4021
20
4025
4021
18
16
06
07
05
4021
14
4021
17
15
08
4021
13
09
3504
4021
10
12
4021
11

INDEX	PART NO.	PART NAME	QTY	AREA	REMARKS	INDEX	PART NO.	PART NAME	QTY	AREA	REMARKS
01AA	1159-1611-02	ORIGINAL COVER	1								
02AA	1159-1612-02	HINGE	2								
03AA	1065-1360-01	SHOULDER SCREW	1								
04AA	1053-3869-01	PLATE SPRING	1								
05AA	1159-1608-01	WIDTH SCALE	1								
06AA	1159-1005-02	REAR COVER	1								
07AA	1159-1010-01	FILTER	1								
08AA	1159-1004-02	LEFT COVER	1								
09AA	1159-2108-02	COVER	1								
10AA	1159-1002-02	LEFT COVER-FNT	1								
11AA	1159-1009-01	COVER	1								
12AA	1159-1001-02	FRONT COVER	1								
13AA	1160-0380-02	CONTROL PANEL	1								
14AA	1160-1006-01	RIGHT COVER-LWR	1								
15AA	1139-7332-01	LABEL	1								
16AA	1159-3104-03	REGULATING PLATE	2								
17AA	1067-3026-01	GEAR 20T	1								
*18AA	1160-7307-01	LABEL 1030	1	2704							
*18BA	1160-7308-01	LABEL 1030F	1	2704							
19AA	1160-3130-01	TABLE	1								
20AA	1159-1003-02	RIGHT COVER-UPR	1								
21AA	1159-1603-01	ORIGINAL GLASS	1								
22AA	1159-1613-02	PAD	1								

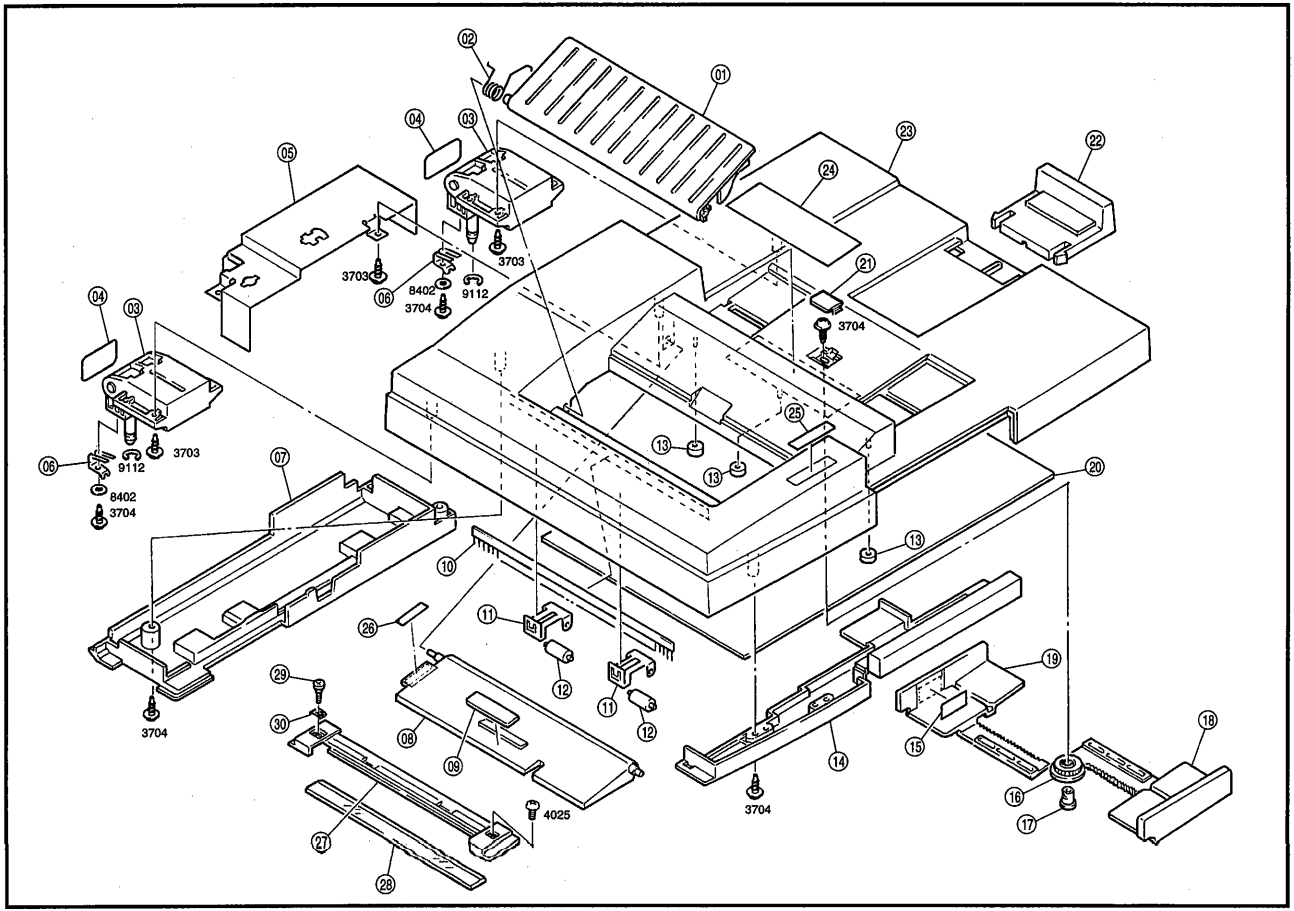
01
02
03
04
05
06
07
08
09
10
11
12
13
14
15
16
17
18
19
20
21
22
23
24
25
26
27
28
29
30
3703
3704
9112
8402
4025

INDEX	PART NO.	PART NAME	QTY	AREA	REMARKS	INDEX	PART NO.	PART NAME	QTY	AREA	REMARKS
01AA	1159-1824-01	GUIDE PLATE	1								
02AA	1159-1932-01	TORSION SPRING	1								
03AA	1159-1913-04	HINGE	2								
04AA	1159-1940-01	SEAL	2								
05AA	1159-1715-01	COVER	1								
06AA	1159-1728-01	PLATE SPRING	2								
07AA	1159-1830-01	REAR COVER-LWR	1								
08AA	1159-1801-03	LIFTING PLATE	1								
09AA	1045-5401-01	CORK	1								
10AA	1159-1936-01	NEUTRALIZING BRUSH	1								
11AA	1159-1911-01	PLATE SPRING	2								
12AA	1159-1812-01	ROLL	2								
13AA	1159-1937-01	COLLAR	3								
14AA	1159-1829-01	COVER	1								
15AA	1159-7309-01	LABEL MAX	1								
16AA	1159-1834-01	GEAR 20T	1								
17AA	1159-1833-01	BUSHING	1								
18AA	1159-1825-02	REGULATING PLATE	1								
19AA	1159-1826-02	REGULATING PLATE	1								
20AA	1159-1613-02	PAD	1								
21AA	1139-1039-01	COVER	1								
22AA	1159-1807-01	TABLE	1								
23AA	1159-1823-03	TOP COVER	1								
24AA	1159-7308-01	LABEL	1								
25AA	1159-7310-02	LABEL	1								
26AA	1159-1943-01	POLYESTER FILM	1								
27AA	1159-1602-02	WIDTH SCALE	1								
28AA	1159-1601-02	ORIGINAL GLASS	1								
29AA	1065-1360-01	SHOULDER SCREW	1								
30AA	1053-3869-01	PLATE SPRING	1								

3 PAPER TAKE-UP SECTION (SDH)

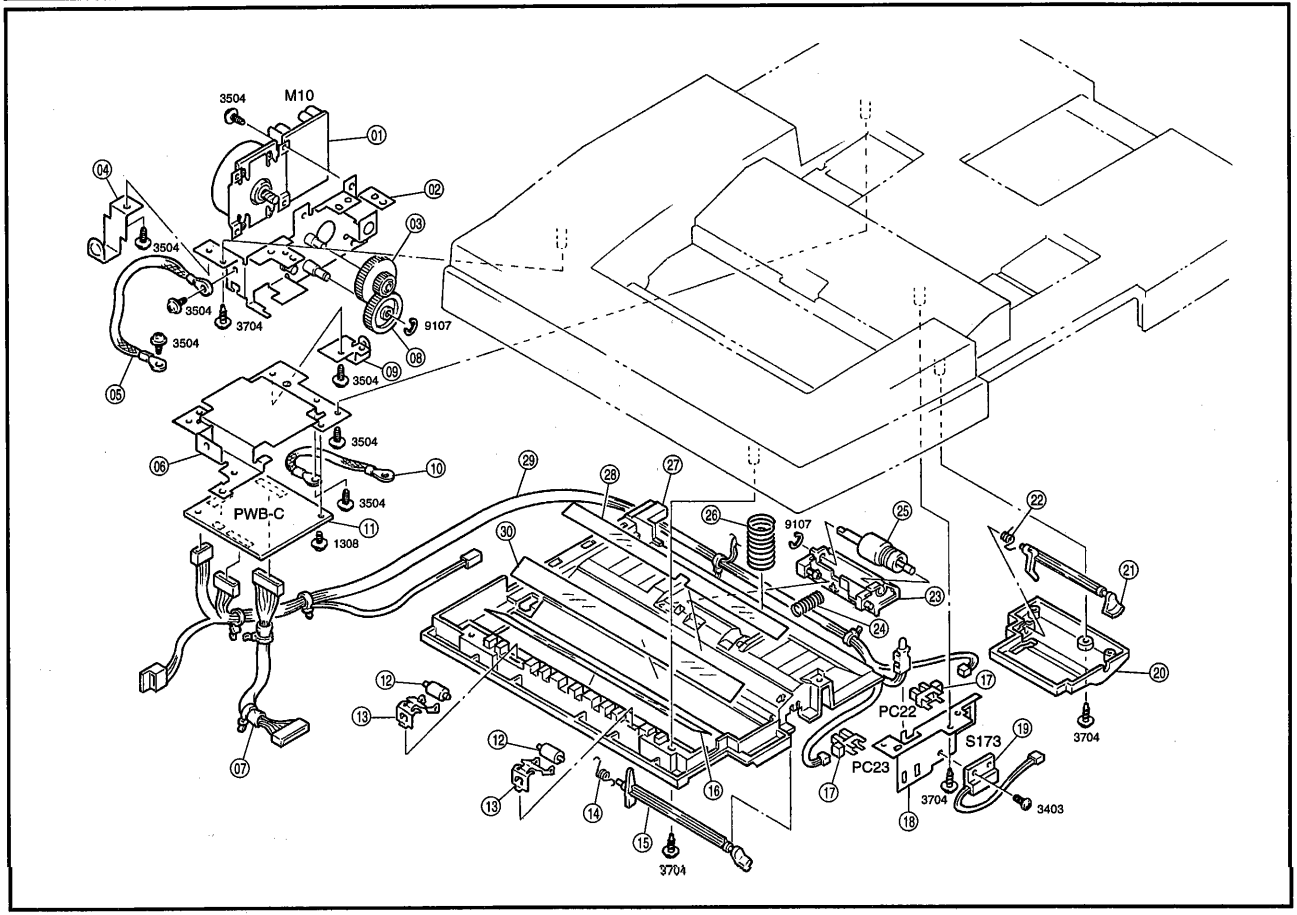

INDEX	PART NO.	PART NAME	QTY	AREA	REMARKS	INDEX	PART NO.	PART NAME	QTY	AREA	REMARKS
01AA	9314-2610-11	PWB-MOTOR MAIN DRV (M10)	1								
02AA	1159-0232-02	BRACKET	1								
03AA	1159-1814-01	GEAR 20/64T	1								
04AA	1159-1729-01	PLATE SPRING	1								
05AA	1159-6818-01	HARNESS	1								
06AA	1159-1713-01	BRACKET	1								
07AA	1159-6814-02	HARNESS	1								
08AA	1159-1836-01	GEAR 40T	1								
09AA	1159-1730-01	PLATE SPRING	1								
10AA	1159-6817-02	HARNESS	1								
11AA	1159-0103-01	PW BOARD-C MAIN (PWB-C)	1								
12AA	1159-1812-01	ROLL	2								
13AA	1159-1702-02	PLATE SPRING	2								
14AA	1159-1904-01	TORSION SPRING	1								
15AA	1159-1806-01	ACTUATOR	1								
16AA	1159-1931-01	GUIDE	1								
17AA	9335-1310-31	PHOTO INTERRUPTER (PC22,23)	2								
18AA	1159-1708-01	BRACKET	1								
19AA	9334-2610-11	REED SWITCH OPN/CLS (S173)	1								
20AA	1159-1832-02	COVER	1								
21AA	1159-1817-01	ACTUATOR	1								
22AA	1159-1942-01	TORSION SPRING	1								
23AA	1159-1810-02	HOLDER	1								
24AA	1159-1908-01	PRESSURE SPRING	1								
25AA	1159-0161-02	SEPARATOR ROLLER	1								
26AA	1159-1901-02	PRESSURE SPRING	1								
27AA	1159-1822-03	CONVEYOR PLATE	1								
28AA	1159-1930-01	GUIDE	1								
29AA	1159-6815-01	HARNESS	1								
30AA	1159-1935-01	POLYESTER.FILM	1								

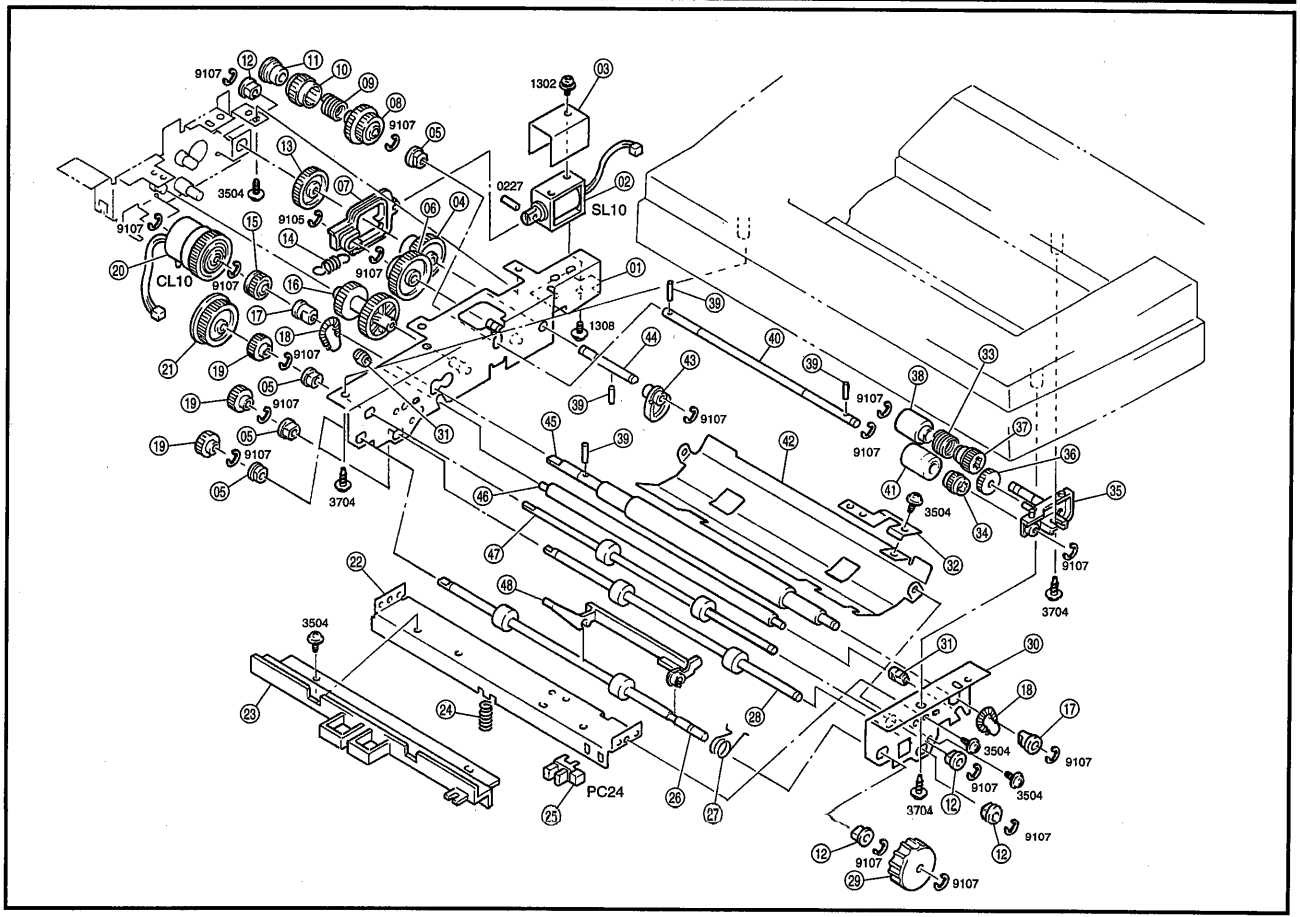
9107
1302
03
0227
02
SL10
3504
9105
CL10
1308
3704
PC24

INDEX	PART NO.	PART NAME			QTY	AREA	REMARKS
01AA	1159-0231-01	REAR FRAME			1		
02AA	9321-2610-71	SOLENOID	TAKE-UP	(SL10)	1		
03AA	1159-1716-01	COVER			1		
04AA	1159-1835-02	GEAR			1		
05AA	1159-1938-01	BUSHING			4		
06AA	1067-1814-01	GEAR 15/32T			1		
07AA	1159-1804-01	LEVER			1		
08AA	1159-1821-01	GEAR 26/18T			1		
09AA	1159-1920-01	CLUTCH SPRING			1		
10AA	1038-4426-01	RATCHET WHEEL			1		
11AA	1159-1828-01	BUSHING			1		
12AA	1159-1837-01	BUSHING			4		
13AA	1159-1818-01	GEAR 26T			1		
14AA	1067-1907-01	TENSION SPRING			1		
15AA	1159-1820-01	GEAR 14T			1		
16AA	1159-1815-01	GEAR 32/32T			1		
17AA	1159-1910-01	BUSHING			2		
18AA	1159-1905-01	TENSION SPRING			2		
19AA	1159-1811-01	GEAR 14T			3		
20AA	9322-1511-21	CLUTCH	REGIST	(CL10)	1		
21AA	1159-1819-01	GEAR 30T			1		
22AA	1159-1701-02	REINFORCE PLATE			1		
23AA	1159-1831-01	COVER			1		
24AA	1067-1737-12	PRESSURE SPRING			1		
25AA	9335-1310-31	PHOTO INTERRUPTER	EXIT	(PC24)	1		
26AA	1159-1927-02	ROLLER			1		
27AA	1159-1912-01	TORSION SPRING			1		
28AA	1159-1928-01	ROLLER			1		
29AA	1066-1120-01	KNOB			1		
30AA	1159-1706-02	BRACKET			1		
31AA	1159-1939-01	BUSHING			2		
32AA	1159-1709-01	GROUND PLATE			1		
33AA	1067-3003-01	CLUTCH SPRING			1		
34AA	1067-1841-01	GEAR 23T			1		
35AA	1159-1827-01	HOLDER			1		
36AA	1159-1838-01	GEAR 34T			1		
37AA	1067-3005-01	GEAR 26T			1		
38AA	1159-1907-02	ROLLER			1		
39AA	1067-2501-01	PIN			4		
40AA	1159-1906-02	SHAFT			1		
41AA	1159-1941-02	ROLLER			1		
42AA	1159-1712-01	GUIDE PLATE			1		

INDEX	PART NO.	PART NAME	QTY	AREA	REMARKS
43AA	1159-1802-02	CAM	1		
44AA	1159-1902-02	SHAFT	1		
45AA	1159-1925-01	ROLLER	1		
46AA	1159-1926-01	ROLLER	1		
47AA	1159-1933-01	ROLLER	1		
48AA	1159-1813-02	LEVER	1		

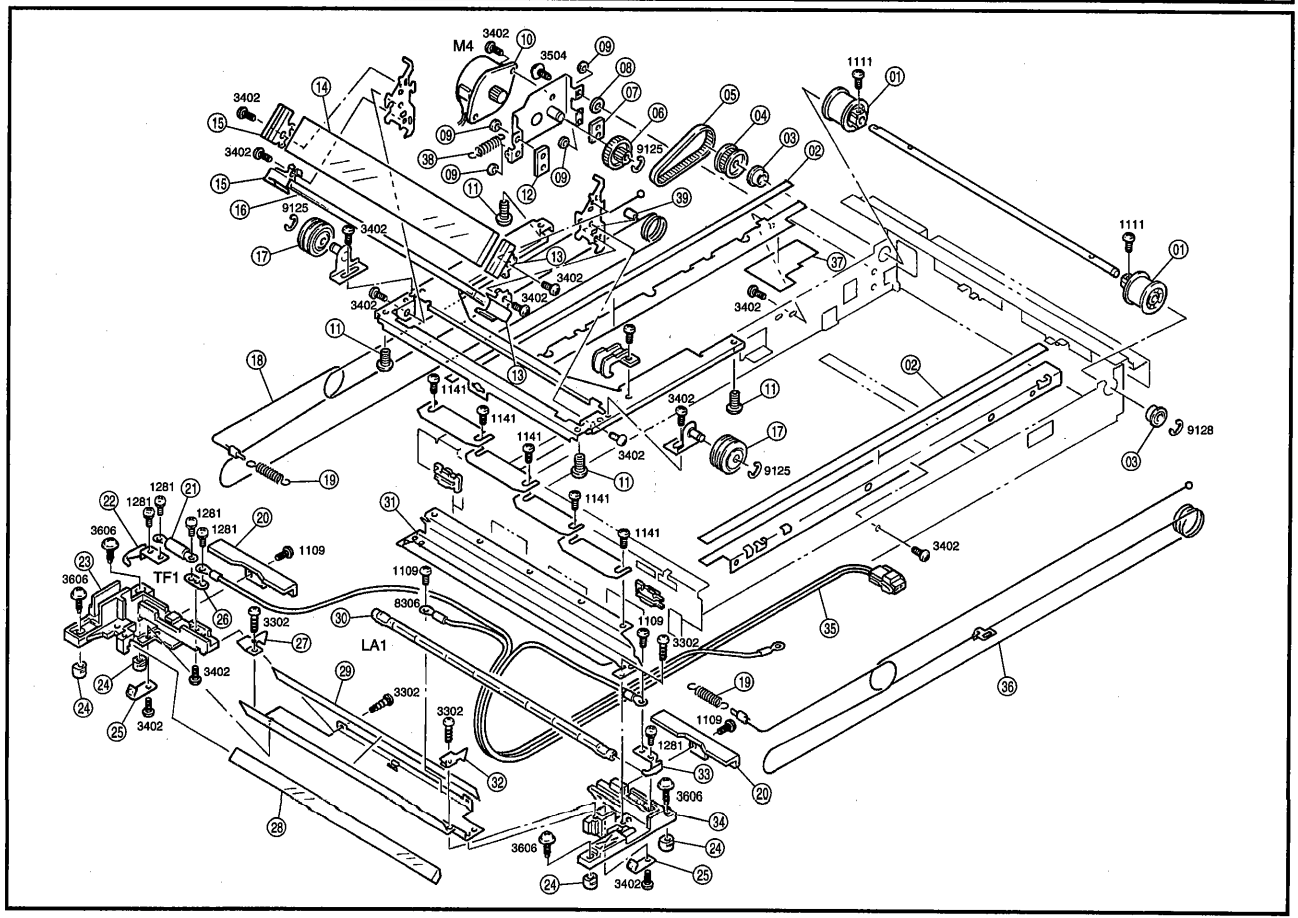
M4
3402
3504
1111
9125
9128
1141
1281
3606
1109
TF1
8306
3302
LA1

INDEX	PART NO.	PART NAME			QTY	AREA	REMARKS	INDEX	PART NO.	PART NAME	QTY	AREA	REMARKS
01AA	1159-7807-01	PULLEY			2								
02AA	1159-7859-01	TAPE			2								
03AA	1159-7862-01	BALL BEARING			2								
04AA	1159-7806-02	PULLEY 34T			1								
05AA	1159-7809-01	TIMING BELT			1								
06AA	1159-7808-01	PULLEY 17/45T			1								
07AA	1159-7854-01	RETAINING RING			1								
08AA	1159-7855-01	RETAINING RING			1								
09AA	1159-7856-02	RETAINING RING			4								
10AA	1159-7805-01	MOTOR	SCANNER	(M4)	1								
11AA	1159-7857-02	SLIDER			4								
12AA	1159-7853-01	RETAINING RING			1								
13AA	1159-7802-02	MIRROR HOLDER			2								
14AA	1159-7840-01	MIRROR			1								
15AA	1159-7801-02	MIRROR HOLDER			2								
16AA	1159-7839-01	MIRROR			1								
17AA	1139-1608-01	BALL BEARING			2								
18AA	1159-7825-01	WIRE			1								
19AA	1159-7803-01	PRESSURE SPRING			2								
20AA	1159-7826-02	COVER			2								
21AA	1159-7815-02	THERMAL FUSE	FUSE	(TF1)	1								
22AA	1159-7823-02	GROUND PLATE			1								
23AA	1159-7814-02	BASE FRAME			1								
24AA	1159-7844-01	SLIDER			4								
25AA	1159-7820-01	PLATE SPRING			2								
26AA	1159-7817-01	GROUND PLATE			1								
27AA	1159-7834-01	REFLECTOR			1								
28AA	1159-7838-01	MIRROR			1								
29AA	1159-7835-01	SEAL			1								
*30AA	1159-7818-01	TUBE LAMP	EXPOSURE	(LA1)	1	2505							
*30BA	1159-7819-01	TUBE LAMP	EXPOSURE	(LA1)	1	2612							
31AA	1159-7821-02	REFLECTOR			1								
32AA	1159-7833-01	REFLECTOR			1								
33AA	1159-7822-02	GROUND PLATE			1								
34AA	1159-7813-02	BASE FRAME			1								
35AA	1159-7816-01	HARNESS			1								
36AA	1159-7824-01	WIRE			1								
37AA	1159-7847-01	POLYESTER FILM			1								
38AA	1159-7849-01	TENSION SPRING			1								
39AA	1159-3014-01	COLLAR			1								

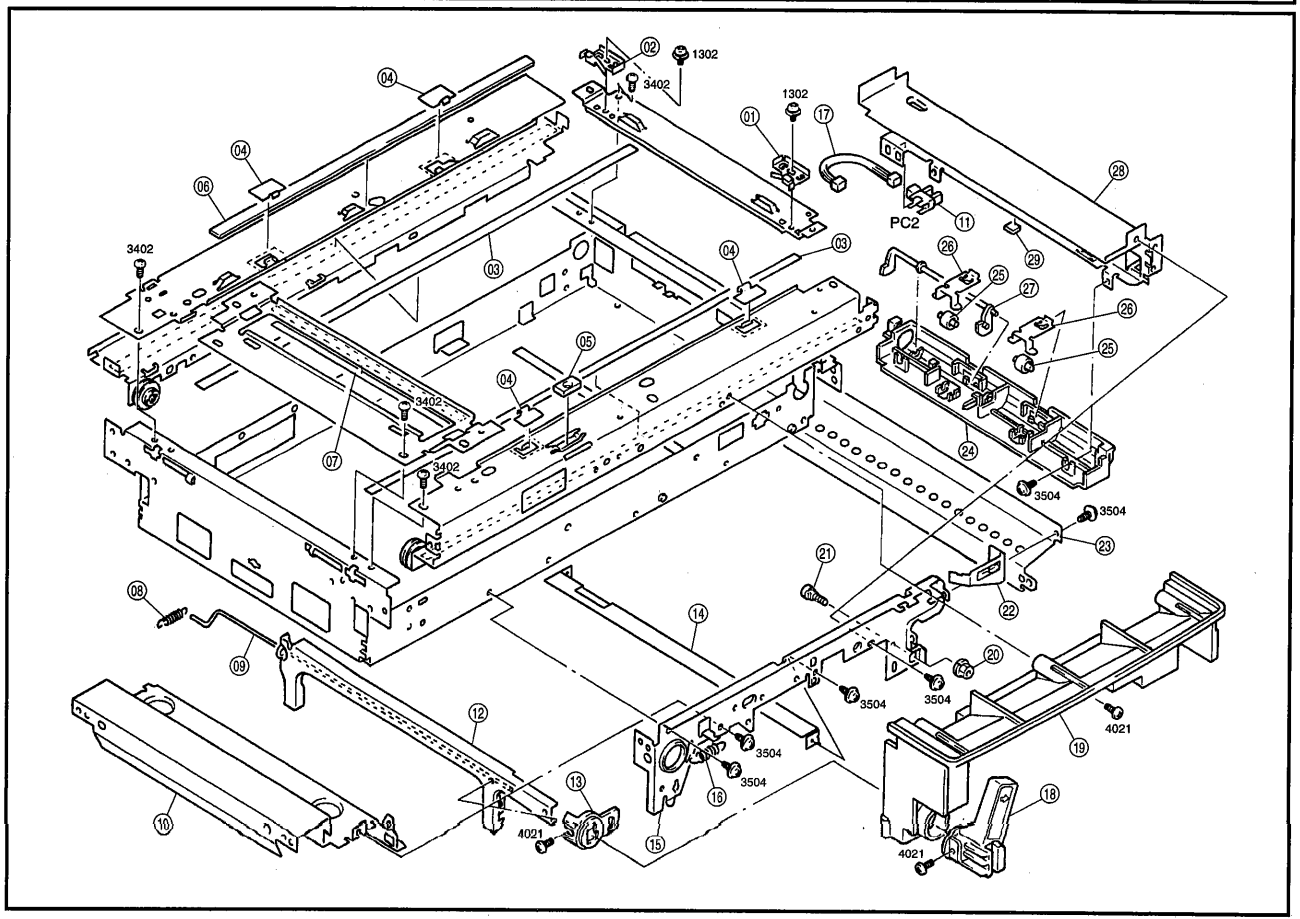
01
02
03
04
05
06
07
08
09
10
11
12
13
14
15
16
17
18
19
20
21
22
23
24
25
26
27
28
29
PC2
1302
3402
3504
4021

INDEX	PART NO.	PART NAME	QTY	AREA	REMARKS	INDEX	PART NO.	PART NAME	QTY	AREA	REMARKS
01AA	1159-1605-01	SET PLATE	1								
02AA	1159-1610-01	SET PLATE	1								
03AA	1159-7858-01	TAPE	2								
04AA	1159-7865-02	SHEET	4								
05AA	9326-2320-21	MAGNET FOR SDH	1								
06AA	1159-7867-01	SPONGE	1								
07AA	1159-7851-01	SHEET	1								
08AA	1159-2104-01	TENSION SPRING	1								
09AA	1159-2101-01	ACTUATOR	1								
10AA	1159-2009-01	RAIL	1								
11AA	9335-1310-31	PHOTO INTERRUPTER TAKE-UP (PC2)	1								
12AA	1159-2013-01	BRACKET	1								
13AA	1159-2023-02	COLLAR	1								
14AA	1160-2001-01	REINFORCE PLATE	1								
15AA	1159-2007-01	FRAME	1								
16AA	1159-2014-01	TENSION SPRING	1								
17AA	1159-6808-01	HARNESS	1								
18AA	1159-2012-01	HANDLE	1								
19AA	1159-1204-03	COVER	1								
20AA	1052-2306-01	NUT	1								
21AA	1159-2024-01	SHOULDER SCREW	1								
22AA	1159-2029-01	BRACKET	1								
23AA	1159-2011-02	REINFORCE PLATE	1								
24AA	1159-3524-02	GUIDE PLATE	1								
25AA	1159-3521-02	ROLL	2								
26AA	1159-3522-01	PLATE SPRING	2								
27AA	1159-3511-01	ACTUATOR	1								
28AA	1159-2010-01	RAIL	1								
29AA	1159-3512-01	SPONGE	1								

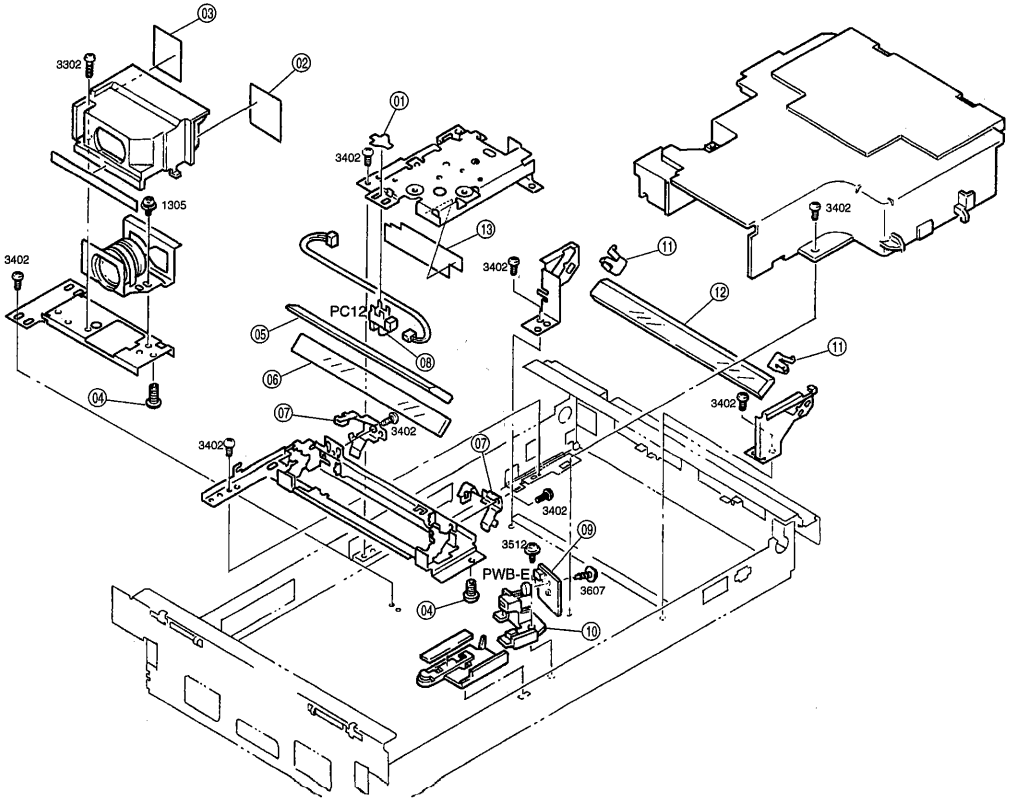
03
3302
02
01
3402
1305
13
3402
3402
11
12
PC12
05
08
06
11
04
07
3402
3402
3402
07
3402
09
3512
PWB-E
3607
04
10

INDEX	PART NO.	PART NAME	QTY	AREA	REMARKS	INDEX	PART NO.	PART NAME	QTY	AREA	REMARKS
01AA	1136-2131-03	STOPPER	1								
02AA	1159-7846-01	POLYESTER FILM	1								
03AA	1159-7845-01	POLYESTER FILM	1								
04AA	1159-7857-02	SLIDER	2								
05AA	1159-7842-01	MIRROR	1								
06AA	1159-7841-01	MIRROR	1								
07AA	1159-7837-01	HOLDER	2								
08AA	9335-1310-31	PHOTO INTERRUPTER LENS HP (PC12)	1								
09AA	1159-0105-01	PW BOARD-E EE (PWB-E)	1								
10AA	1159-7804-02	HOLDER	1								
11AA	1159-7836-01	PLATE SPRING	2								
12AA	1159-7843-01	MIRROR	1								
13AA	1160-7801-01	POLYESTER FILM	1								

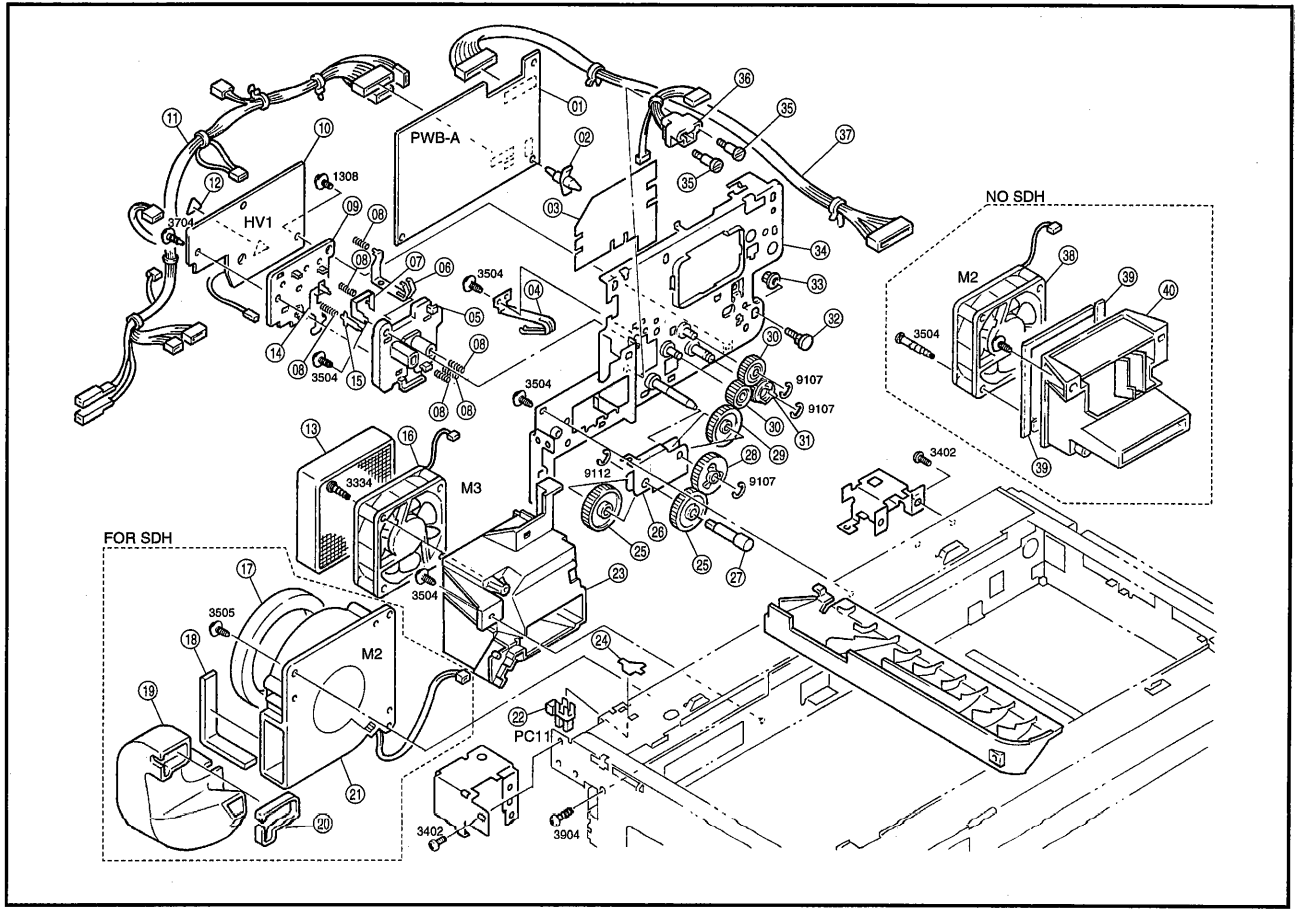
PWB-A
HV1
M2
M3
NO SDH
FOR SDH
PC11
1308
3704
3504
3334
3505
3402
3904
9107
9112

INDEX	PART NO.	PART NAME			QTY	AREA	REMARKS	INDEX	PART NO.	PART NAME	QTY	AREA	REMARKS
01AA	1160-0101-05	PW BOARD-A	MASTER	(PWB-A)	1								
02AA	9384-1900-56	PWB SUPPORT 6.35H			1								
03AA	1159-2028-02	COVER			1								
04AA	1159-4012-01	PLATE SPRING			1								
05AA	1159-4021-03	HOLDER			1								
06AA	1159-4024-01	GROUND PLATE			1								
07AA	1159-4023-01	GROUND PLATE			1								
08AA	1159-4120-01	PRESSURE SPRING			6								
09AA	1159-4025-03	COVER			1								
10AA	1159-6205-03	PWB-HV		(HV1)	1								
11AA	1159-6804-02	HARNESS			1								
12AA	1080-7303-01	LABEL HIGH VOLTAGE			1								
*13AA	1159-2032-01	OZON FILTER			1	0703							
*13BA	1159-2027-02	OZONE FILTER			1	2706							
14AA	1159-4022-02	GROUND PLATE			1								
15AA	1159-4026-01	GROUND PLATE			1								
16AA	9313-1610-81	FAN MOTOR	OZONE FAN	(M3)	1								
17AA	1159-1615-01	SPONGE			1								
18AA	1159-1617-01	SPONGE			1								
19AA	1159-1614-01	DUCT			1								
20AA	1159-1616-01	SPONGE			1								
21AA	9313-1611-01	FAN MOTOR	COOLING	(M2)	1								
22AA	9335-1310-31	PHOTO INTERRUPTER	SCANNER	(PC11)	1								
23AA	1159-2020-02	DUCT			1								
24AA	1136-2131-03	STOPPER			1								
25AA	1159-2525-01	GEAR 35T			2								
26AA	1159-2508-01	AXLE PLATE			1								
27AA	1159-2524-01	SHAFT			1								
28AA	1159-2523-01	GEAR 32T			1								
29AA	1159-2520-01	GEAR 32T			1								
30AA	1159-2519-01	GEAR 21T			2								
31AA	1159-2521-01	JOINT			1								
32AA	1159-2024-01	SHOULDER SCREW			1								
33AA	1052-2306-01	NUT			1								
34AA	1159-0202-03	FRAME			1								
35AA	1159-5525-01	SHOULDER SCREW			2								
36AA	1159-6819-01	HARNESS			1								
37AA	1159-6805-01	HARNESS			1								
38AA	9313-1610-91	FAN MOTOR	COOLING	(M2)	1								
39AA	1159-1753-01	SPONGE			2								
40AA	1159-1750-01	DUCT			1								

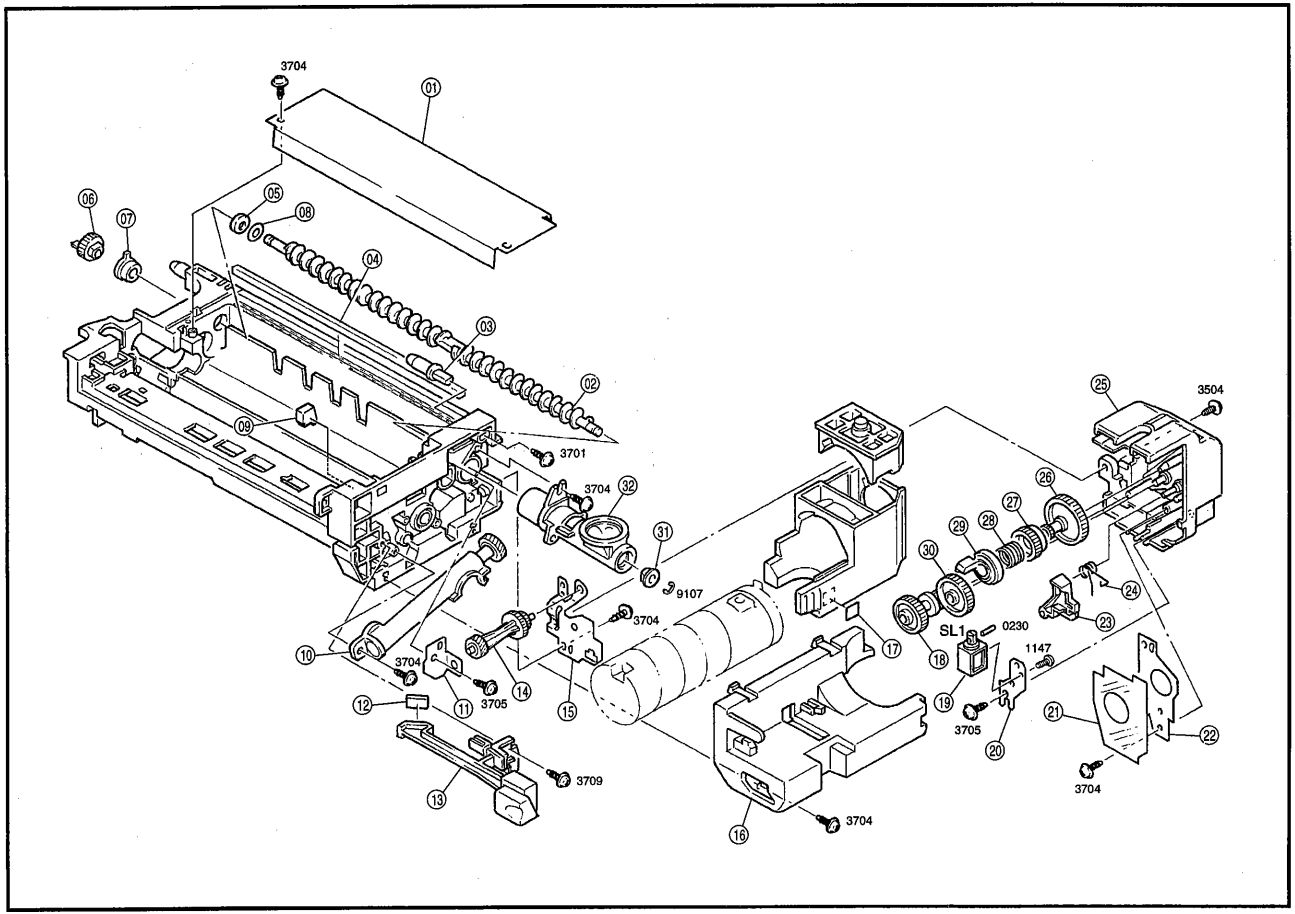
3704
01
06
07
05
08
04
03
02
09
3701
3704
32
31
9107
3704
10
3704
11
3705
14
15
12
13
3709
16
3704
17
SL1
0230
18
1147
19
3705
20
25
3504
26
27
28
29
30
24
23
21
22
3704

INDEX	PART NO.	PART NAME	QTY	AREA	REMARKS	INDEX	PART NO.	PART NAME	QTY	AREA	REMARKS
01AA	1159-5018-04	COVER	1								
02AA	1159-0752-01	ROLLER ASSY	1								
03AA	1067-5044-02	SHAFT	1								
04AA	1159-5028-01	SPONGE	1								
05AA	1159-5011-01	SEAL	1								
06AA	1159-5026-01	GEAR 23T	1								
07AA	1159-5010-01	BUSHING	1								
08AA	1159-5032-01	WASHER	1								
09AA	1159-5526-04	SEAL	1								
10AA	1159-0152-02	DUCT	1								
11AA	1159-5017-01	BRACKET	1								
*12AA	1132-5533-01	SEAL	1	0702							
*13AA	1159-5557-01	ROCK LEVER	1	0702							
14AA	1159-5311-01	GEAR 14/24/13T	1								
15AA	1159-5304-02	BRACKET	1								
16AA	1159-5555-02	HOLDER	1								
17AA	1067-5327-01	LABEL GREEN	1								
18AA	1132-5306-01	GEAR 18/35T	1								
19AA	9321-2310-22	SOLENOID TONER (SL1)	1								
20AA	1159-5305-01	BRACKET	1								
21AA	1159-5313-01	POLYESTER FILM	1								
22AA	1159-5317-01	BRACKET	1								
23AA	1159-5307-01	PAWL	1								
24AA	1159-5308-01	TORSION SPRING	1								
25AA	1159-5352-01	HOLDER	1								
26AA	1132-5311-01	GEAR 54T	1								
27AA	1067-5313-02	RATCHET	1								
28AA	1132-5312-01	CLUTCH SPRING	1								
29AA	1159-5309-02	HOLDER	1								
30AA	1159-5315-01	GEAR 40T	1								
31AA	1200-3221-06	BUSHING	1								
32AA	1159-5012-01	CONVEYOR DUCT	1								

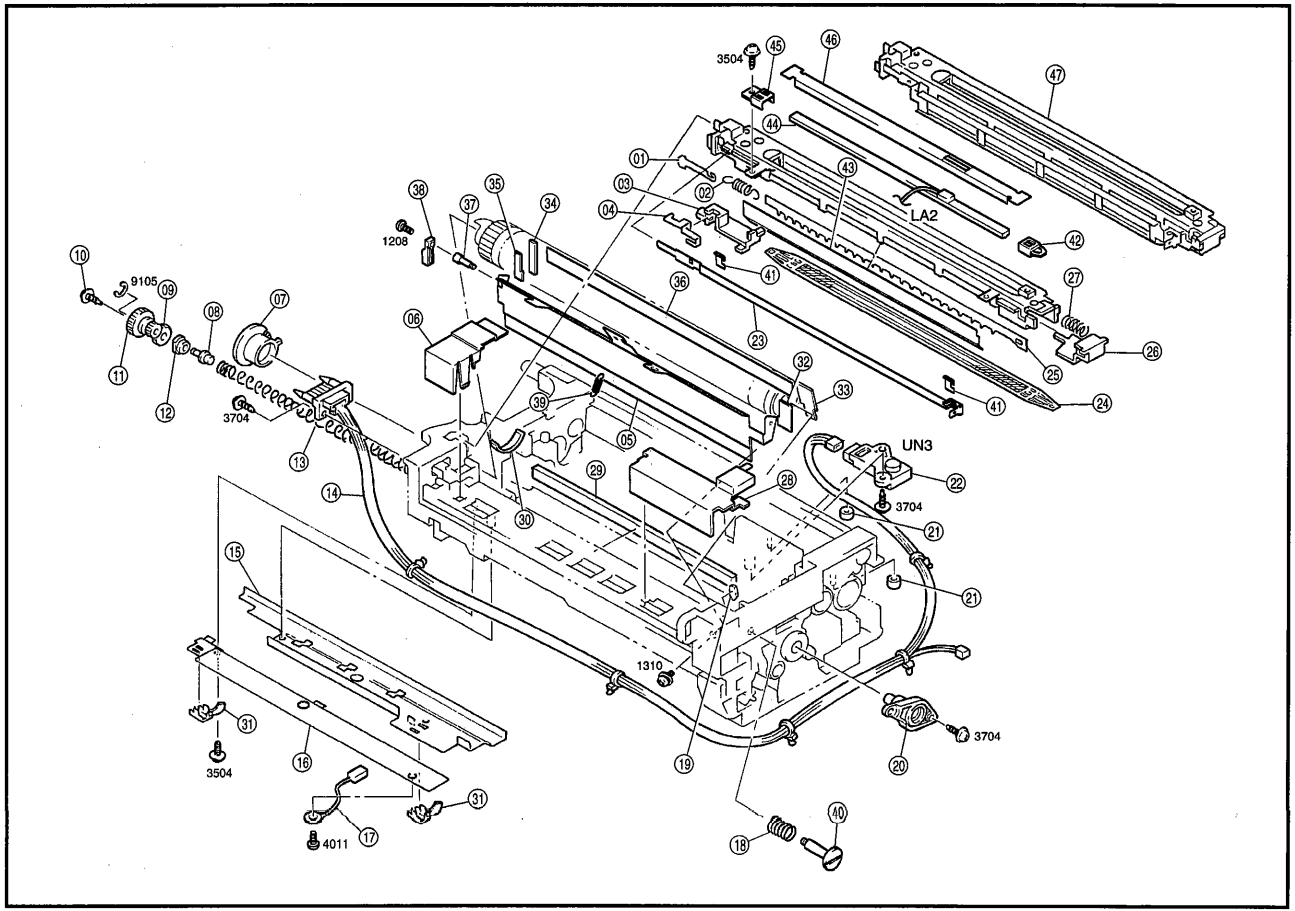
3504
45
46
47
44
01
43
03
02
04
LA2
42
38
37
35
34
1208
41
27
10
9105
09
36
07
08
06
23
26
25
11
12
3704
32
33
39
41
24
05
UN3
13
29
28
22
14
30
3704
21
15
21
1310
31
3704
3504
16
19
20
31
40
4011
17
18

INDEX	PART NO.	PART NAME	QTY	AREA	REMARKS
01AA	1159-4005-01	GROUND PLATE	1		
02AA	1159-4009-01	TENSION SPRING	1		
03AA	1159-4008-01	HOLDER	1		
04AA	1159-4006-01	HOOK PLATE	1		
05AA	1159-5501-05	CLEANING BLADE	1		
06AA	1159-5509-02	COVER	1		
07AA	1159-4405-01	BUSHING	1		
08AA	1159-5510-01	SHAFT	1		
09AA	1067-5509-01	GEAR 22T	1		
10AA	1159-5524-01	SCREW	1		
11AA	1159-5522-02	GEAR 17/24T	1		
12AA	1159-5511-01	BUSHING	1		
13AA	1159-5502-01	TRANSPORT COIL	1		
14AA	1159-6820-01	HARNESS	1		
15AA	1159-5504-03	ANTISPILL PLATE	1		
16AA	1159-5531-02	BRACKET	1		
17AA	1159-6812-03	HARNESS	1		
18AA	1159-5538-01	PRESSURE SPRING	1		
19AA	1159-5515-04	SEAL	1		
20AA	1159-4404-01	STOP PLATE	1		
21AA	1159-5031-01	COLLAR	2		
22AA	1136-6052-12	ATDC UNIT ATDC (UN3)	1		
23AA	1159-4031-03	BRACKET	1		
24AA	1159-4004-01	GRID	1		
25AA	1159-4003-01	CORONA PLATE	1		
26AA	1159-4007-02	HOLDER	1		
27AA	1159-4014-01	PRESSURE SPRING	1		
28AA	1159-5506-04	COVER	1		
29AA	1159-5518-02	SEAL	1		
30AA	1159-5528-03	SEAL	1		
31AA	1159-4123-01	GUIDE	2		
32AA	1159-5532-02	SEAL	1		
33AA	1159-5533-01	POLYESTER FILM	1		
34AA	1159-5542-01	SEAL	1		
35AA	1159-5541-01	SEAL	1		
36AA	1159-4035-01	SHEET	1		
37AA	1159-5540-01	SHOULDER SCREW	1		
38AA	1159-5537-01	LEVER	1		
39AA	1159-5535-01	TENSION SPRING	1		
40AA	1159-5539-01	SHOULDER SCREW	1		
41AA	1159-4033-02	SEAL	2		
42AA	1159-4030-01	HOLDER	1		
43AA	1159-4032-02	SEAL	1		
44AA	1159-6054-01	BOARD LAMP MAIN (LA2)	1		
45AA	1159-4034-01	HOLDER	1		
46AA	1159-4036-01	SEAL	1		
47AA	1159-0445-01	DRUM CHARGE CORONA	1		

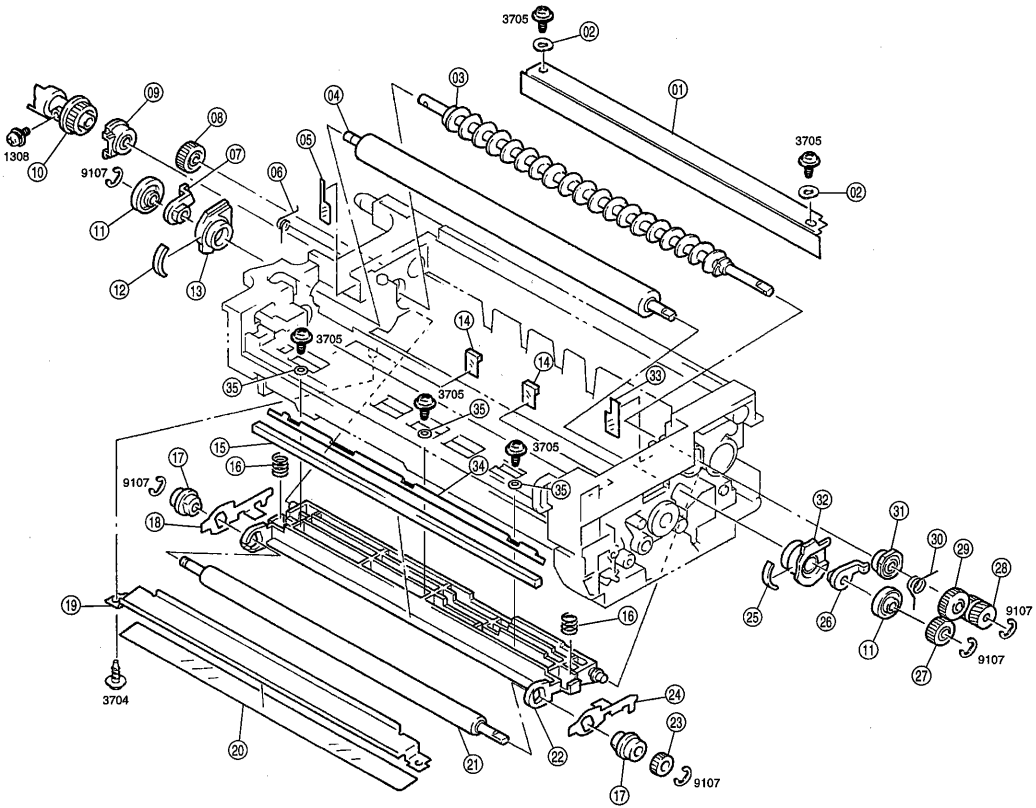
3705
02
01
03
04
05
06
07
08
09
10
1308
9107
11
12
13
3705
14
14
33
35
3705
35
3705
34
35
15
16
17
9107
18
19
3704
20
21
22
16
24
23
9107
17
32
31
30
29
28
9107
25
26
11
27
9107

INDEX	PART NO.	PART NAME	QTY	AREA	REMARKS	INDEX	PART NO.	PART NAME	QTY	AREA	REMARKS
01AA	1159-5003-04	REGULATING PLATE	1								
02AA	1139-5250-01	PLATE SPRING	2								
03AA	1159-0162-01	CONVEYOR ROLLER	1								
04AA	1159-5002-03	DEVELOPING ROLLER	1								
05AA	1159-5025-02	POLYESTER FILM	1								
06AA	1159-5014-02	TORSION SPRING	1								
07AA	1159-5022-02	BUSHING	1								
08AA	1159-5027-01	GEAR 20T	1								
09AA	1159-0154-01	BUSHING	1								
10AA	1159-5109-02	JOINT	1								
11AA	1159-5036-01	ROLL	2								
12AA	1159-5030-01	SEAL	1								
13AA	1159-0753-01	BUSHING	1								
14AA	1159-5530-02	SEAL	2								
15AA	1159-3533-02	CLEANING PAD	1								
16AA	1159-3532-01	PRESSURE SPRING	2								
17AA	1067-3517-01	BUSHING	2								
18AA	1159-3536-01	HOLD PLATE	1								
19AA	1159-4113-01	GUIDE PLATE	1								
20AA	1159-4119-01	POLYESTER FILM	1								
21AA	1159-3531-01	ROLLER	1								
22AA	1159-3534-02	GUIDE PLATE	1								
23AA	1067-3502-01	GEAR 20T	1								
24AA	1159-3535-01	HOLD PLATE	1								
25AA	1159-5029-01	SEAL	1								
26AA	1159-5021-01	BUSHING	1								
27AA	1067-5035-01	GEAR 20T	1								
28AA	1159-5016-01	GEAR 12/17T	1								
29AA	1132-5034-01	GEAR 22T	1								
30AA	1159-5013-01	TORSION SPRING	1								
31AA	1144-0168-01	BUSHING	1								
32AA	1159-0754-01	BUSHING	1								
33AA	1159-5024-01	SEAL	1								
34AA	1159-3538-02	REINFORCE PLATE	1								
35AA	1159-3539-01	WASHER	3								

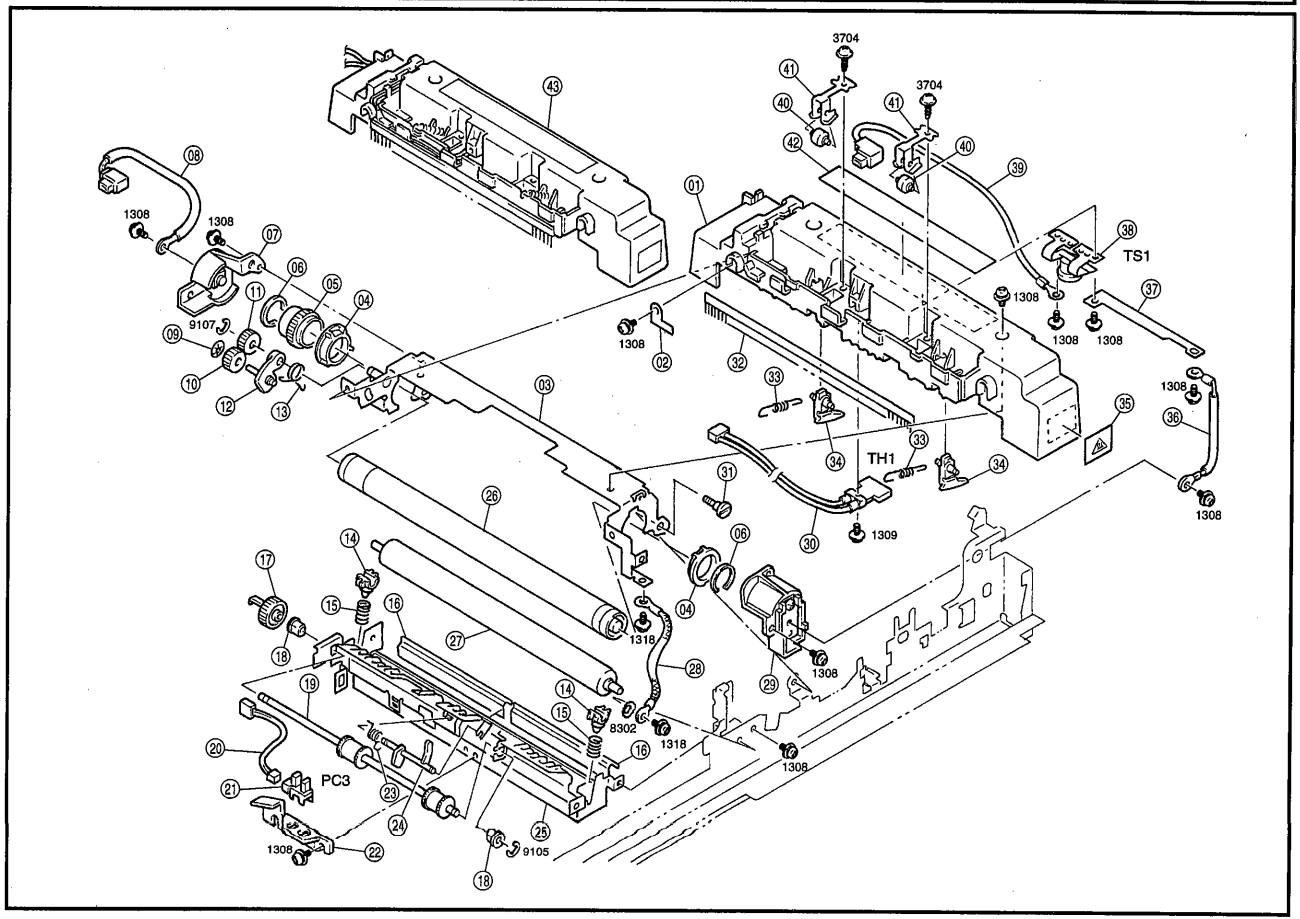
3704
3704
TS1
TH1
PC3
1308
1309
1318
8302
9107
9105

INDEX	PART NO.	PART NAME	QTY	AREA	REMARKS
01AA	1159-5808-02	COVER	1		
02AA	1159-5747-01	BRACKET	1		
03AA	1159-5707-02	FRAME	1		
04AA	1159-5741-02	BUSHING	2		
05AA	1159-5755-01	GEAR 36T	1		
06AA	1159-5743-01	STOPPER PLATE	2		
07AA	1159-0182-02	HOLDER	1		
08AA	1159-6816-01	HARNESS	1		
09AA	1500-2620-01	NUT	1		
10AA	1159-5746-01	GEAR 18T	1		
11AA	1159-5710-01	GEAR 18T	1		
12AA	1159-5712-01	LEVER	1		
13AA	1159-5713-01	TORSION SPRING	1		
14AA	1159-5742-01	BUSHING	2		
15AA	1159-5740-03	PRESSURE SPRING	2		
16AA	1159-5764-01	SHEET	2		
17AA	1159-5727-01	GEAR 26T	1		
18AA	1200-3201-09	BUSHING	2		
19AA	1159-5725-01	ROLLER	1		
20AA	1159-6810-02	HARNESS	1		
21AA	9335-1310-31	PHOTO INTERRUPTER EXIT (PC3)	1		
22AA	1159-5756-01	HOLDER	1		
23AA	1159-5739-01	TORSION SPRING	1		
24AA	1159-5735-02	ACTUATOR	1		
25AA	1159-5736-01	BRACKET	1		
*26AA	1159-5750-02	FUSING ROLLER-UPR	1	2505	
*26BA	1159-5757-02	FUSING ROLLER-UPR	1	2612	
27AA	1159-5702-01	FUSING ROLLER-LWR	1		
28AA	1159-6803-01	HARNESS	1		
29AA	1159-0181-02	HOLDER	1		
30AA	9372-2610-42	THERMISTOR (TH1)	1		
31AA	1159-5760-01	SHOULDER SCREW	1		
32AA	1159-5714-01	NEUTRALIZING BRUSH	1		
33AA	1159-5719-01	TENSION SPRING	2		
34AA	1159-5758-01	SEPARATOR	2		
35AA	1159-7333-01	LABEL CAUTION-HOT	1		
36AA	1159-6811-01	HARNESS	1		
37AA	1159-5720-01	TERMINAL	1		
38AA	9334-1610-21	THERMOSTAT (TS1)	1		
39AA	1159-6801-01	HARNESS	1		
40AA	1050-4707-02	ROLL	2		
41AA	1159-5723-02	PLATE SPRING	2		
42AA	1159-7326-01	LABEL HIGH VOLTAGE	1		
*43AA	1159-0396-01	FUSING UNIT	1	2505	
*43BA	1159-0395-01	FUSING UNIT	1	2612	

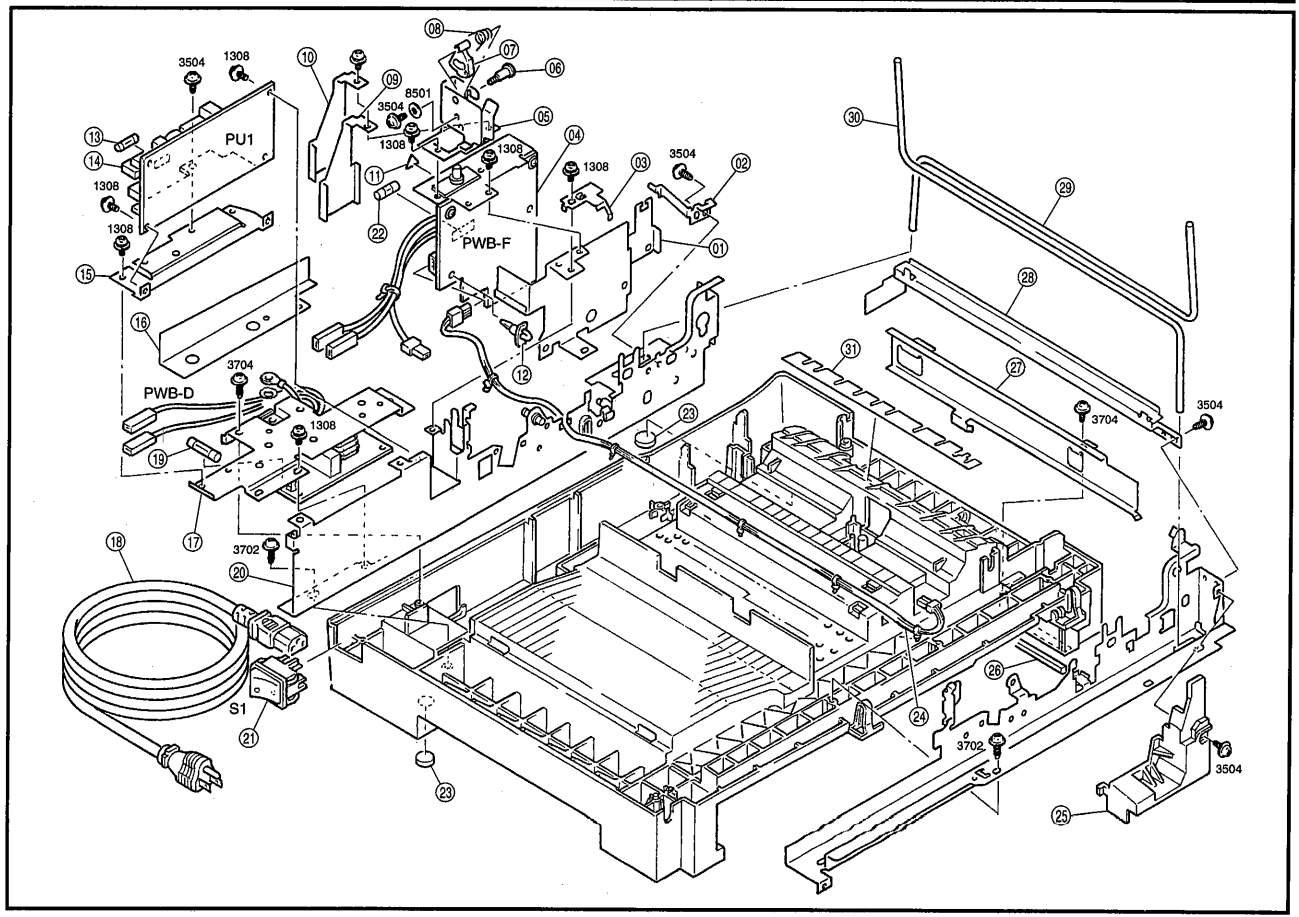
PU1
PWB-F
PWB-D
S1
3504
1308
8501
3704
3702

INDEX	PART NO.	PART NAME			QTY	AREA	REMARKS	INDEX	PART NO.	PART NAME	QTY	AREA	REMARKS
01AA	1159-2103-03	BRACKET			1								
02AA	1159-2527-03	STOPPER PLATE			1								
03AA	1159-2114-02	GROUND PLATE			1								
*04AA	1159-0106-02	PW BOARD-F	AVR	(PWB-F)	1	2505							
*04BA	1159-0108-02	PW BOARD-F	AVR	(PWB-F)	1	2612							
05AA	1159-2109-02	HOLDER			1								
06AA	1159-2115-01	SHOULDER SCREW			1								
07AA	1159-2107-03	ACTUATOR			1								
08AA	1159-2110-01	TORSION SPRING			1								
09AA	1159-2120-01	SHEET			1								
10AA	1159-2118-01	SHEET			1								
11AA	1080-7303-01	LABEL HIGH VOLTAGE			1								
12AA	9384-1900-56	PWB SUPPORT 6.35H			2								
13AA	1138-7810-01	FUSE 2A			1								
*14AA	1159-6201-03	PWB-PU	PW SPLY	(PU1)	1	2505							
*14BA	1159-6202-02	PWB-PU	PW SPLY	(PU1)	1	2612							
15AA	1159-2106-02	BRACKET			1								
16AA	1159-2116-02	SHEET			1								
*17AA	1159-0104-03	PW BOARD-D		(PWB-D)	1	2505							
*17BA	1159-0107-03	PW BOARD-D		(PWB-D)	1	2612							
*18AA	9381-4610-31	POWER CORD			1	2505							
*18BA	9381-4310-81	POWER CORD			1	2619							
*19AA	9346-3720-51	FUSE 15A			1	2505							
*19BA	9346-3610-31	FUSE 8A			2	2612							
20AA	1160-0201-02	FRAME			1								
21AA	9332-5610-51	SWITCH	POWER SW	(S1)	1								
*22AA	9346-3710-11	FUSE 3.15A			1	2612							
23AA	1159-2025-01	RUBBER FOOT			2								
24AA	1159-6802-02	HARNESS			1								
25AA	1159-2105-01	COVER			1								
*26AA	1159-3506-01	SPONGE			1	2706							
27AA	1159-3016-01	RAIL			1								
28AA	1159-2005-02	REINFORCE PLATE			1								
29AA	1159-2017-02	TORSION BAR	FOR ORI COVER		1								
29BA	1159-2022-02	TORSION BAR	FOR SDH		1								
30AA	1159-2018-02	TORSION BAR	FOR ORI COVER		1								
30BA	1159-2021-01	TORSION BAR	FOR SDH		1								
31AA	1159-3537-01	POLUYESTER FILM			1								

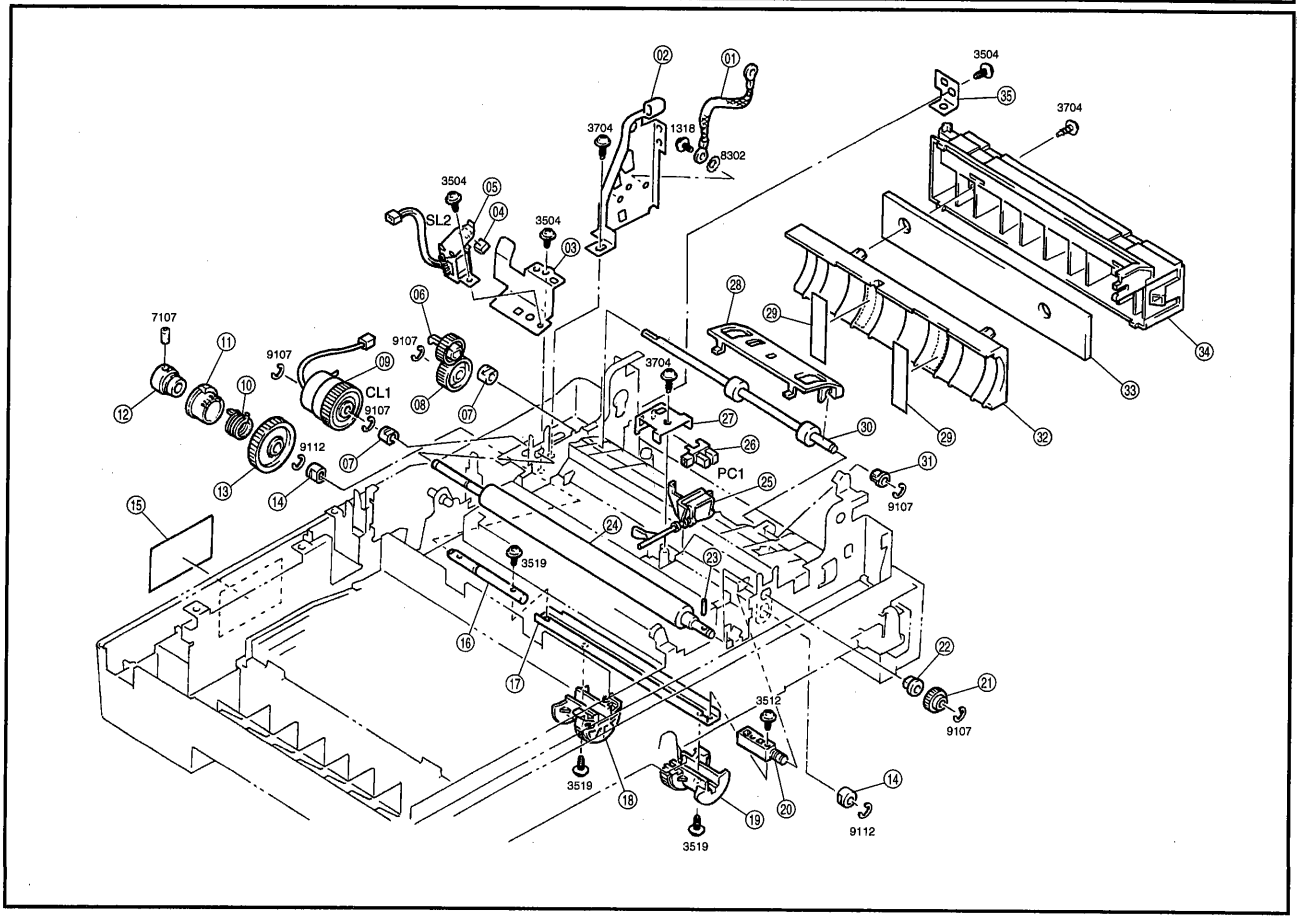

3504
3704
1318
8302
SL2
CL1
PC1
7107
9107
9112
3519
3512

INDEX	PART NO.	PART NAME	QTY	AREA	REMARKS	INDEX	PART NO.	PART NAME	QTY	AREA	REMARKS
01AA	1159-6813-01	HARNESS	1								
02AA	1159-2006-02	BRACKET	1								
03AA	1159-3034-02	BRACKET	1								
04AA	1159-3037-01	PAD	1								
05AA	9321-2610-51	SOLENOID TAKE-UP (SL2)	1								
06AA	1159-3523-01	GEAR 24T	1								
07AA	1200-3121-07	BUSHING	2								
08AA	1159-2529-01	GEAR 36T	1								
09AA	9322-1511-21	CLUTCH REGIST (CL1)	1								
10AA	1159-3032-01	CLUTCH SPRING	1								
11AA	1159-3031-01	RATCHET	1								
12AA	1139-3008-01	ARBOR	1								
13AA	1159-3030-01	GEAR 54T	1								
14AA	1200-3134-16	BUSHING	2								
*15AA	1142-7302-01	LABEL CAUTION	1	2706							
16AA	1159-3021-01	SHAFT	1								
17AA	1159-3023-01	SHAFT	1								
18AA	1159-3020-01	ROLLER	1								
19AA	1159-3022-01	ROLLER	1								
20AA	1151-3061-01	HOLDER	1								
21AA	1067-3513-01	GEAR 32T	1								
22AA	1274-2611-01	BUSHING	1								
23AA	1067-2502-01	PIN	1								
24AA	1159-3530-02	ROLLER	1								
25AA	1159-3035-01	ACTUATOR	1								
26AA	9335-1310-31	PHOTO INTERRUPTER FOR SDH (PC1)	1								
27AA	1159-3036-01	BRACKET	1								
28AA	1159-3527-01	GUIDE PLATE	2								
29AA	1160-3508-01	SHEET	2								
30AA	1159-3520-01	ROLLER	1								
31AA	1159-3525-02	BUSHING	1								
32AA	1160-3504-03	GUIDE	1								
*33AA	1159-3505-02	PAD	1	2706							
34AA	1160-3501-03	DOOR	1								
35AA	1159-3502-01	BRACKET	1								

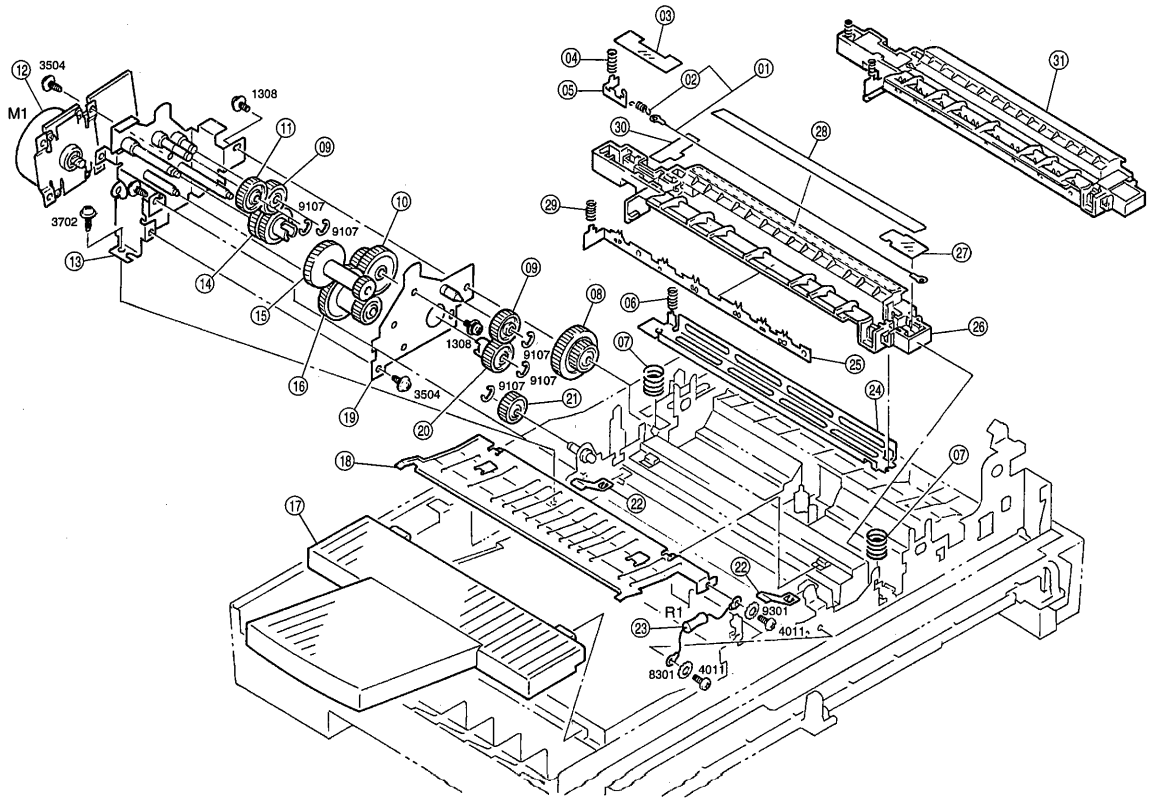
M1
R1
3504
1308
3702
9107
9107
1308
9107
9107
9107
3504
9301
4011
8301
4011

INDEX	PART NO.	PART NAME	QTY	AREA	REMARKS	INDEX	PART NO.	PART NAME	QTY	AREA	REMARKS
01AA	1159-0751-01	CORONA WIRE	1								
02AA	1159-4121-01	TENSION SPRING	1								
03AA	1159-4109-01	LID	1								
04AA	1159-4122-01	PRESSURE SPRING	1								
05AA	1159-4105-01	GROUND PLATE	1								
06AA	1159-4120-01	PRESSURE SPRING	1								
07AA	1159-4110-03	PRESSURE SPRING	2								
08AA	1159-2515-01	GEAR 27/36T	1								
09AA	1159-2519-01	GEAR 21T	2								
10AA	1159-2530-01	GEAR 24/36T	1								
11AA	1159-2526-01	GEAR 24T	1								
12AA	9314-2610-11	PWB-MOTOR MAIN (M1)	1								
13AA	1159-0203-02	BRACKET	1								
14AA	1159-2506-01	GEAR 28/64T	1								
15AA	1159-2511-01	GEAR 67/19T	1								
16AA	1159-2503-01	GEAR 20/80T	1								
17AA	1159-1008-01	TRAY	1								
18AA	1159-5737-02	GUIDE PLATE	1								
19AA	1159-0204-01	AXLE PLATE	1								
20AA	1159-2505-01	GEAR 20T	1								
21AA	1159-5732-01	GEAR 27T	1								
22AA	1159-5738-02	PLATE SPRING	2								
23AA	1159-0131-01	RESISTOR (R1)	1								
24AA	1159-4103-02	COVER	1								
25AA	1159-4117-02	NEUTRALIZING BRUSH	1								
26AA	1159-4112-02	HOLDER	1								
27AA	1159-4108-02	LID	1								
28AA	1067-4122-02	SEAL	1								
29AA	1159-4124-01	PRESSURE SPRING	1								
30AA	1159-4125-01	POLYESTER FILM	1								
31AA	1159-0410-01	TRANS CORONA UNIT	1								

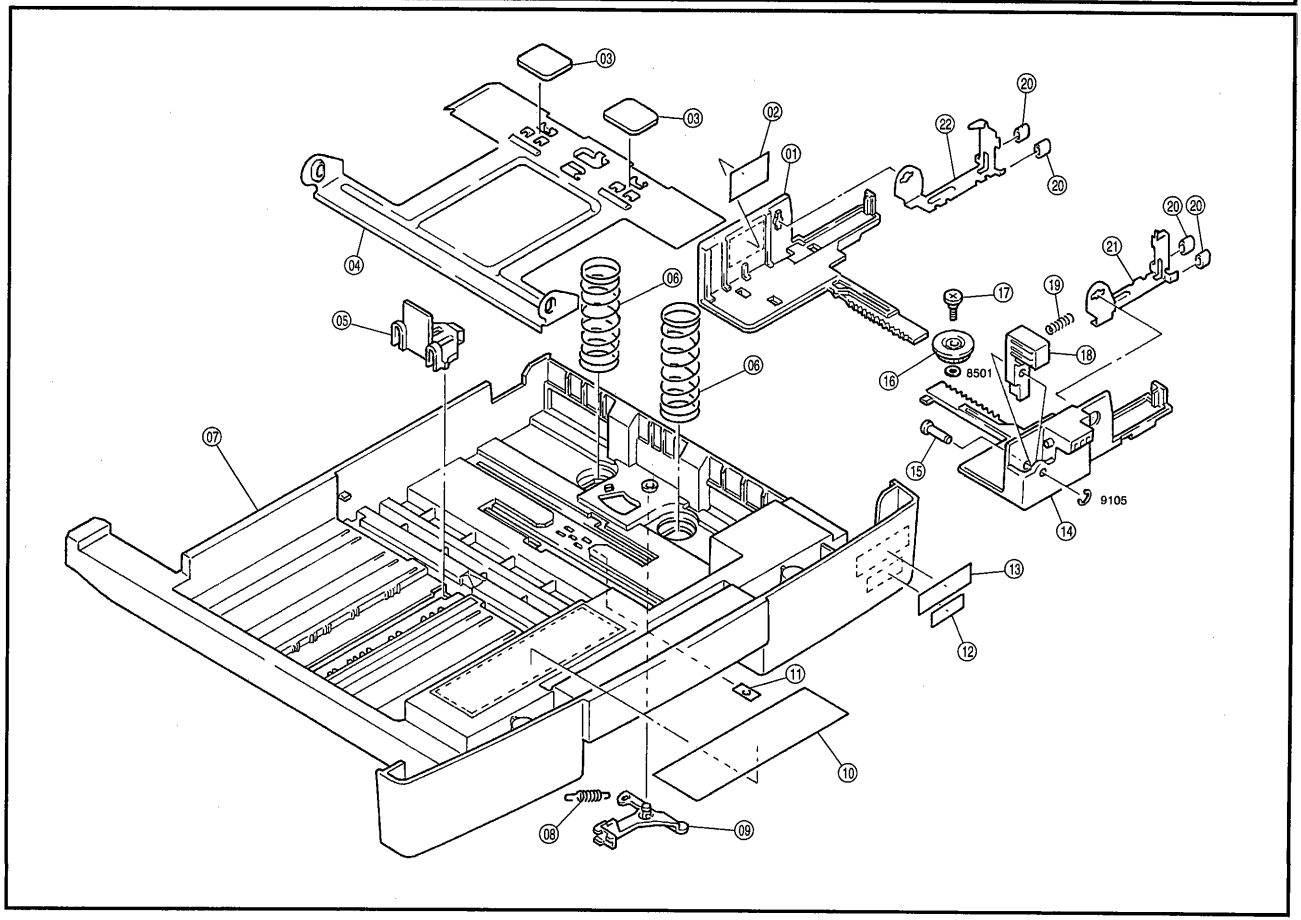
03
03
02
01
20
22
20
04
06
05
20
20
21
17
19
18
16
8501
06
07
15
9105
14
13
12
11
10
08
09

INDEX	PART NO.	PART NAME	QTY	AREA	REMARKS	INDEX	PART NO.	PART NAME	QTY	AREA	REMARKS
01AA	1159-3003-02	REGULATING PLATE	1								
02AA	1151-7308-01	LABEL MAX	1								
03AA	1159-3009-01	FRICTION SHEET	2								
04AA	1159-3006-01	LIFTING PLATE	1								
05AA	0996-3014-03	GUIDE	1								
06AA	1159-3010-02	PRESSURE SPRING	2								
07AA	1159-3001-03	CASSETTE BODY	1								
08AA	1159-3013-01	TENSION SPRING	1								
09AA	1159-3011-01	LEVER	1								
10AA	1159-7306-03	LABEL PAPER LOADING	1								
11AA	1067-3058-01	PLATE NUT	1								
*12AA	1160-7311-02	LABEL EP1030	1	0702							
*12BA	1160-7312-02	LABEL EP1030F	1	0702							
13AA	1159-7315-01	LABEL CS PRO	1								
14AA	1159-3002-02	REGULATING PLATE	1								
15AA	1159-3007-01	SHAFT	1								
16AA	1067-3026-01	GEAR 20T	1								
17AA	1067-3045-01	SHOULDER SCREW	1								
18AA	1159-3008-01	LOCK LEVER	1								
19AA	1159-3012-01	PRESSURE SPRING	1								
*20AA	1159-3014-01	COLLAR	4	2706							
21AA	1159-3004-01	SEPARATOR	1								
22AA	1159-3005-01	SEPARATOR	1								

01
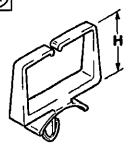

06
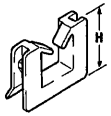

02
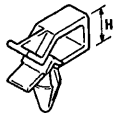

07
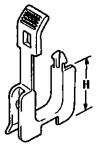

03
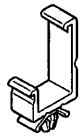

08
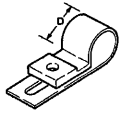

04


09
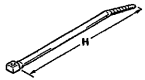

05
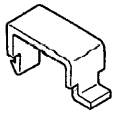

INDEX	PART NO.	PART NAME	QTY	AREA	REMARKS	INDEX	PART NO.	PART NAME	QTY	AREA	REMARKS
01AA	9384-1310-81	WIRING SADDLE 6.4H	12								
02AA	9384-1820-31	WIRING SADDLE 8.0H	1								
03AA	9384-1311-01	WIRING SADDLE 27H	5								
04AA	1139-1422-01	CORD CLAMP	1								
05AA	1065-5872-01	CORD CLAMP	1								
06AA	9384-2010-21	EDGE COVER 8.5H	7								
07AA	9384-2010-31	EDGE COVER 15.4H	1								
08AA	9384-1600-04	P-CLIP 5D	1								
09AA	9384-1821-41	CABLE TIE	2								

INDEX	PART NO.	PART NAME	ILLUST
0227 0230	9754-0308-08 9754-1608-08	SPRING ROLL PIN	
1109 1111 1141 1147	9642-0304-13 9642-0306-13 9642-0305-13 9642-0203-13	SCREW	
1281	9644-0306-01	SCREW	
1302 1305 1308 1309 1310 1318	9646-0305-13 9646-0306-13 9646-0308-13 9646-0310-13 9646-0312-13 9646-0408-13	SCREW	
1606	9654-0306-07	SCREW	
3302 3334	9732-0306-07 9732-0434-13	TAPPING SCREW	
3402 3403	9733-0306-13 9733-0308-13	TAPPING SCREW	
3504 3505 3512 3519	9735-0308-13 9735-0310-13 9735-0306-07 9735-0312-13	TAPPING SCREW	

INDEX	PART NO.	PART NAME	ILLUST
3606 3607	9738-0306-13 9738-0308-07	TAPPING SCREW	
3701 3702 3703 3704 3705 3709 3727	9739-0408-13 9739-0410-13 9739-0412-13 9739-0308-13 9739-0306-13 9739-0310-13 9739-0308-14	TAPPING SCREW	
3904 3924	9742-0305-07 9742-0308-14	TAPPING SCREW	
4011 4020 4021 4025	9743-0308-13 9743-0408-14 9743-0308-14 9743-0306-14	TAPPING SCREW	
7107	9684-0406-08	SET SCREW	
8301 8302 8306	9712-0300-13 9712-0400-13 9712-0300-01	WASHER	
8402 8501	9715-0300-01 9716-0300-01	WASHER	
9105 9107 9112 9125 9128	9721-0300-01 9721-0400-01 9721-0600-01 9721-0400-13 9721-0500-08	RETAINING RING	

INDEX	PART NO.	PART NAME	ILLUST

PART NO.	FIG.	INDEX	QTY
0996-3014-03	16	05AA	1
1038-4426-01	04	10AA	1
1045-5401-01	02	09AA	1
1050-4707-02	12	40AA	2
1052-2306-01	06	20AA	1
1052-2306-01	08	33AA	1
1053-3869-01	01	04AA	1
1053-3869-01	02	30AA	1
1065-1360-01	01	03AA	1
1065-1360-01	02	29AA	1
1065-5872-01	17	05AA	1
1066-1120-01	04	29AA	1
1067-1737-12	04	24AA	1
1067-1814-01	04	06AA	1
1067-1841-01	04	34AA	1
1067-1907-01	04	14AA	1
1067-2501-01	04	39AA	4
1067-2502-01	14	23AA	1
1067-3003-01	04	33AA	1
1067-3005-01	04	37AA	1
1067-3026-01	01	17AA	1
1067-3026-01	16	16AA	1
1067-3045-01	16	17AA	1
1067-3058-01	16	11AA	1
1067-3502-01	11	23AA	1
1067-3513-01	14	21AA	1
1067-3517-01	11	17AA	2
1067-4122-02	15	28AA	1
1067-5035-01	11	27AA	1
1067-5044-02	09	03AA	1
1067-5313-02	09	27AA	1
1067-5327-01	09	17AA	1
1067-5509-01	10	09AA	1
1080-7303-01	08	12AA	1
1080-7303-01	13	11AA	1
1132-5034-01	11	29AA	1
1132-5306-01	09	18AA	1
1132-5311-01	09	26AA	1
1132-5312-01	09	28AA	1
1132-5533-01	09	12AA	1
1136-2131-03	07	01AA	1
1136-2131-03	08	24AA	1
1136-6052-12	10	22AA	1
1138-7810-01	13	13AA	1
1139-1039-01	02	21AA	1
1139-1422-01	17	04AA	1
1139-1608-01	05	17AA	2
1139-3008-01	14	12AA	1
1139-5250-01	11	02AA	2
1139-7332-01	01	15AA	1
1142-7302-01	14	15AA	1
1144-0168-01	11	31AA	1
1151-3061-01	14	20AA	1
1151-7308-01	16	02AA	1
1159-0103-01	03	11AA	1
1159-0104-03	13	17AA	1
1159-0105-01	07	09AA	1
1159-0106-02	13	04AA	1
1159-0107-03	13	17BA	1
1159-0108-02	13	04BA	1
1159-0131-01	15	23AA	1
1159-0152-02	09	10AA	1
1159-0154-01	11	09AA	1
1159-0161-02	03	25AA	1
1159-0162-01	11	03AA	1
1159-0181-02	12	29AA	1
1159-0182-02	12	07AA	1
1159-0202-03	08	34AA	1
1159-0203-02	15	13AA	1
1159-0204-01	15	19AA	1
1159-0231-01	04	01AA	1
1159-0232-02	03	02AA	1
1159-0395-01	12	43BA	1
1159-0396-01	12	43AA	1
1159-0410-01	15	31AA	1
1159-0445-01	10	47AA	1
1159-0751-01	15	01AA	1
1159-0752-01	09	02AA	1
1159-0753-01	11	13AA	1
1159-0754-01	11	32AA	1
1159-1001-02	01	12AA	1
1159-1002-02	01	10AA	1
1159-1003-02	01	20AA	1
1159-1004-02	01	08AA	1
1159-1005-02	01	06AA	1
1159-1008-01	15	17AA	1
1159-1009-01	01	11AA	1
1159-1010-01	01	07AA	1
1159-1204-03	06	19AA	1
1159-1601-02	02	28AA	1
1159-1602-02	02	27AA	1
1159-1603-01	01	21AA	1
1159-1605-01	06	01AA	1
1159-1608-01	01	05AA	1
1159-1610-01	06	02AA	1
1159-1611-02	01	01AA	1
1159-1612-02	01	02AA	2
1159-1613-02	01	22AA	1
1159-1613-02	02	20AA	1
1159-1614-01	08	19AA	1
1159-1615-01	08	17AA	1
1159-1616-01	08	20AA	1
1159-1617-01	08	18AA	1
1159-1701-02	04	22AA	1
1159-1702-02	03	13AA	2
1159-1706-02	04	30AA	1
1159-1708-01	03	18AA	1
1159-1709-01	04	32AA	1
1159-1712-01	04	42AA	1
1159-1713-01	03	06AA	1
1159-1715-01	02	05AA	1
1159-1716-01	04	03AA	1
1159-1728-01	02	06AA	2
1159-1729-01	03	04AA	1
1159-1730-01	03	09AA	1
1159-1750-01	08	40AA	1
1159-1753-01	08	39AA	2
1159-1801-03	02	08AA	1
1159-1802-02	04	43AA	1
1159-1804-01	04	07AA	1
1159-1806-01	03	15AA	1
1159-1807-01	02	22AA	1
1159-1810-02	03	23AA	1
1159-1811-01	04	19AA	3
1159-1812-01	02	12AA	2
1159-1812-01	03	12AA	2
1159-1813-02	04	48AA	1
1159-1814-01	03	03AA	1
1159-1815-01	04	16AA	1
1159-1817-01	03	21AA	1
1159-1818-01	04	13AA	1
1159-1819-01	04	21AA	1
1159-1820-01	04	15AA	1
1159-1821-01	04	08AA	1
1159-1822-03	03	27AA	1
1159-1823-03	02	23AA	1
1159-1824-01	02	01AA	1
1159-1825-02	02	18AA	1
1159-1826-02	02	19AA	1
1159-1827-01	04	35AA	1
1159-1828-01	04	11AA	1
1159-1829-01	02	14AA	1
1159-1830-01	02	07AA	1
1159-1831-01	04	23AA	1
1159-1832-02	03	20AA	1
1159-1833-01	02	17AA	1
1159-1834-01	02	16AA	1
1159-1835-02	04	04AA	1
1159-1836-01	03	08AA	1
1159-1837-01	04	12AA	4
1159-1838-01	04	36AA	1
1159-1901-02	03	26AA	1
1159-1902-02	04	44AA	1
1159-1904-01	03	14AA	1
1159-1905-01	04	18AA	2
1159-1906-02	04	40AA	1
1159-1907-02	04	38AA	1
1159-1908-01	03	24AA	1
1159-1910-01	04	17AA	2
1159-1911-01	02	11AA	2
1159-1912-01	04	27AA	1
1159-1913-04	02	03AA	2
1159-1920-01	04	09AA	1
1159-1925-01	04	45AA	1
1159-1926-01	04	46AA	1
1159-1927-02	04	26AA	1
1159-1928-01	04	28AA	1
1159-1930-01	03	28AA	1
1159-1931-01	03	16AA	1
1159-1932-01	02	02AA	1
1159-1933-01	04	47AA	1
1159-1935-01	03	30AA	1
1159-1936-01	02	10AA	1
1159-1937-01	02	13AA	3
1159-1938-01	04	05AA	4
1159-1939-01	04	31AA	2
1159-1940-01	02	04AA	2
1159-1941-02	04	41AA	1
1159-1942-01	03	22AA	1
1159-1943-01	02	26AA	1
1159-2005-02	13	28AA	1
1159-2006-02	14	02AA	1
1159-2007-01	06	15AA	1
1159-2009-01	06	10AA	1
1159-2010-01	06	28AA	1
1159-2011-02	06	23AA	1
1159-2012-01	06	18AA	1
1159-2013-01	06	12AA	1
1159-2014-01	06	16AA	1
1159-2017-02	13	29AA	1
1159-2018-02	13	30AA	1
1159-2020-02	08	29AA	1
1159-2021-01	13	30BA	1
1159-2022-02	13	29BA	1
1159-2023-02	06	13AA	1
1159-2024-01	06	21AA	1
1159-2024-01	08	32AA	1
1159-2025-01	13	23AA	2
1159-2027-02	08	13BA	1
1159-2028-02	08	33AA	1
1159-2029-01	06	22AA	1
1159-2032-01	08	13AA	1
1159-2101-01	06	09AA	1
1159-2103-03	13	01AA	1
1159-2104-01	06	08AA	1
1159-2105-01	13	25AA	1
1159-2106-02	13	15AA	1
1159-2107-03	13	07AA	1
1159-2108-02	01	09AA	1
1159-2109-02	13	05AA	1
1159-2110-01	13	08AA	1
1159-2114-02	13	03AA	1
1159-2115-01	13	06AA	1
1159-2116-02	13	16AA	1
1159-2118-01	13	10AA	1
1159-2120-01	13	09AA	1
1159-2503-01	15	16AA	1
1159-2505-01	15	20AA	1
1159-2506-01	15	14AA	1
1159-2508-01	08	26AA	1
1159-2511-01	15	15AA	1
1159-2515-01	15	08AA	1
1159-2519-01	08	30AA	2
1159-2519-01	15	09AA	2
1159-2520-01	08	29AA	1
1159-2521-01	08	31AA	1
1159-2523-01	08	28AA	1
1159-2524-01	08	27AA	1
1159-2525-01	08	25AA	2
1159-2526-01	15	11AA	1
1159-2527-03	13	02AA	1
1159-2529-01	14	08AA	1
1159-2530-01	15	10AA	1
1159-3001-03	16	07AA	1
1159-3002-02	16	14AA	1
1159-3003-02	16	01AA	1
1159-3004-01	16	21AA	1
1159-3005-01	16	22AA	1
1159-3006-01	16	04AA	1
1159-3007-01	16	15AA	1
1159-3008-01	16	18AA	1
1159-3009-01	16	03AA	2
1159-3010-02	16	06AA	2
1159-3011-01	16	09AA	1
1159-3012-01	16	19AA	1
1159-3013-01	16	08AA	1
1159-3014-01	05	39AA	1
1159-3014-01	16	20AA	4
1159-3016-01	13	27AA	1
1159-3020-01	14	18AA	1
1159-3021-01	14	16AA	1
1159-3022-01	14	19AA	1
1159-3023-01	14	17AA	1
1159-3030-01	14	13AA	1
1159-3031-01	14	11AA	1
1159-3032-01	14	10AA	1
1159-3034-02	14	03AA	1
1159-3035-01	14	25AA	1
1159-3036-01	14	27AA	1
1159-3037-01	14	04AA	1
1159-3104-03	01	16AA	2
1159-3502-01	14	35AA	1
1159-3505-02	14	33AA	1
1159-3506-01	13	26AA	1
1159-3511-01	06	27AA	1
1159-3512-01	06	29AA	1
1159-3520-01	14	30AA	1
1159-3521-02	06	25AA	2
1159-3522-01	06	26AA	2
1159-3523-01	14	06AA	1
1159-3524-02	06	24AA	1
1159-3525-02	14	31AA	1
1159-3527-01	14	28AA	2
1159-3530-02	14	24AA	1
1159-3531-01	11	21AA	1
1159-3532-01	11	16AA	2
1159-3533-02	11	15AA	1
1159-3534-02	11	22AA	1
1159-3535-01	11	24AA	1
1159-3536-01	11	18AA	1

PART NO.	FIG.	INDEX	QTY
1159-3537-01	13	31AA	1
1159-3538-02	11	34AA	1
1159-3539-01	11	35AA	3
1159-4003-01	10	25AA	1
1159-4004-01	10	24AA	1
1159-4005-01	10	01AA	1
1159-4006-01	10	04AA	1
1159-4007-02	10	26AA	1
1159-4008-01	10	03AA	1
1159-4009-01	10	02AA	1
1159-4012-01	08	04AA	1
1159-4014-01	10	27AA	1
1159-4021-03	08	05AA	1
1159-4022-02	08	14AA	1
1159-4023-01	08	07AA	1
1159-4024-01	08	06AA	1
1159-4025-03	08	09AA	1
1159-4026-01	08	15AA	1
1159-4030-01	10	42AA	1
1159-4031-03	10	23AA	1
1159-4032-02	10	43AA	1
1159-4033-02	10	41AA	2
1159-4034-01	10	45AA	1
1159-4035-01	10	36AA	1
1159-4036-01	10	46AA	1
1159-4103-02	15	24AA	1
1159-4105-01	15	05AA	1
1159-4108-02	15	27AA	1
1159-4109-01	15	03AA	1
1159-4110-03	15	07AA	2
1159-4112-02	15	26AA	1
1159-4113-01	11	19AA	1
1159-4117-02	15	25AA	1
1159-4119-01	11	20AA	1
1159-4120-01	08	08AA	6
1159-4120-01	15	06AA	1
1159-4121-01	15	02AA	1
1159-4122-01	15	04AA	1
1159-4123-01	10	31AA	2
1159-4124-01	15	29AA	1
1159-4125-01	15	30AA	1
1159-4404-01	10	20AA	1
1159-4405-01	10	07AA	1
1159-5002-03	11	04AA	1
1159-5003-04	11	01AA	1
1159-5010-01	09	07AA	1
1159-5011-01	09	05AA	1
1159-5012-01	09	32AA	1
1159-5013-01	11	30AA	1
1159-5014-02	11	06AA	1
1159-5016-01	11	28AA	1
1159-5017-01	09	11AA	1
1159-5018-04	09	01AA	1
1159-5021-01	11	26AA	1
1159-5022-02	11	07AA	1
1159-5024-01	11	33AA	1
1159-5025-02	11	05AA	1
1159-5026-01	09	06AA	1
1159-5027-01	11	08AA	1
1159-5028-01	09	04AA	1
1159-5029-01	11	25AA	1
1159-5030-01	11	12AA	1
1159-5031-01	10	21AA	2
1159-5032-01	09	08AA	1
1159-5036-01	11	11AA	2
1159-5109-02	11	10AA	1
1159-5304-02	09	15AA	1
1159-5305-01	09	20AA	1
1159-5307-01	09	23AA	1
1159-5308-01	09	24AA	1
1159-5309-02	09	29AA	1
1159-5311-01	09	14AA	1
1159-5313-01	09	21AA	1
1159-5315-01	09	30AA	1
1159-5317-01	09	22AA	1
1159-5352-01	09	25AA	1
1159-5501-05	10	05AA	1
1159-5502-01	10	13AA	1
1159-5504-03	10	15AA	1
1159-5506-04	10	28AA	1
1159-5509-02	10	06AA	1
1159-5510-01	10	08AA	1
1159-5511-01	10	12AA	1
1159-5515-04	10	19AA	1
1159-5518-02	10	29AA	1
1159-5522-02	10	11AA	1
1159-5524-01	10	10AA	1
1159-5525-01	08	35AA	2
1159-5526-04	09	09AA	1
1159-5528-03	10	30AA	1
1159-5530-02	11	14AA	2
1159-5531-02	10	16AA	1
1159-5532-02	10	32AA	1
1159-5533-01	10	33AA	1
1159-5535-01	10	39AA	1
1159-5537-01	10	38AA	1
1159-5538-01	10	18AA	1
1159-5539-01	10	40AA	1
1159-5540-01	10	37AA	1
1159-5541-01	10	35AA	1
1159-5542-01	10	34AA	1
1159-5555-02	09	16AA	1
1159-5557-01	09	13AA	1
1159-5702-01	12	27AA	1
1159-5707-02	12	03AA	1
1159-5710-01	12	11AA	1
1159-5712-01	12	12AA	1
1159-5713-01	12	13AA	1
1159-5714-01	12	32AA	1
1159-5719-01	12	33AA	2
1159-5720-01	12	37AA	1
1159-5723-02	12	41AA	2
1159-5725-01	12	19AA	1
1159-5727-01	12	17AA	1
1159-5732-01	15	21AA	1
1159-5735-02	12	24AA	1
1159-5736-01	12	25AA	1
1159-5737-02	15	18AA	1
1159-5738-02	12	22AA	2
1159-5739-01	12	23AA	1
1159-5740-03	12	15AA	2
1159-5741-02	12	04AA	2
1159-5742-01	12	14AA	2
1159-5743-01	12	06AA	2
1159-5746-01	12	10AA	1
1159-5747-01	12	02AA	1
1159-5750-02	12	26AA	1
1159-5755-01	12	05AA	1
1159-5756-01	12	22AA	1
1159-5757-02	12	26BA	1
1159-5758-01	12	34AA	2
1159-5760-01	12	31AA	1
1159-5764-01	12	16AA	2
1159-5808-02	12	01AA	1
1159-6054-01	10	44AA	1
1159-6201-03	13	14AA	1
1159-6202-02	13	14BA	1
1159-6205-03	08	10AA	1
1159-6801-01	12	39AA	1
1159-6802-02	13	24AA	1
1159-6803-01	12	28AA	1
1159-6804-02	08	11AA	1
1159-6805-01	08	37AA	1
1159-6808-01	06	17AA	1
1159-6810-02	12	20AA	1
1159-6811-01	12	36AA	1
1159-6812-03	10	17AA	1
1159-6813-01	14	01AA	1
1159-6814-02	03	07AA	1
1159-6815-01	03	29AA	1
1159-6816-01	12	08AA	1
1159-6817-02	03	10AA	1
1159-6818-01	03	05AA	1
1159-6819-01	08	36AA	1
1159-6820-01	10	14AA	1
1159-7306-03	16	10AA	1
1159-7308-01	02	24AA	1
1159-7309-01	02	15AA	1
1159-7310-02	02	25AA	1
1159-7315-01	16	13AA	1
1159-7326-01	12	42AA	1
1159-7333-01	12	35AA	1
1159-7801-02	05	15AA	2
1159-7802-02	05	23AA	2
1159-7803-01	05	19AA	2
1159-7804-02	07	10AA	1
1159-7805-01	05	10AA	1
1159-7806-02	05	04AA	1
1159-7807-01	05	01AA	2
1159-7808-01	05	06AA	1
1159-7809-01	05	05AA	1
1159-7813-02	05	34AA	1
1159-7814-02	05	23AA	1
1159-7815-02	05	21AA	1
1159-7816-01	05	35AA	1
1159-7817-01	05	26AA	1
1159-7818-01	05	30AA	1
1159-7819-01	05	30BA	1
1159-7820-01	05	25AA	2
1159-7821-02	05	31AA	1
1159-7822-02	05	33AA	1
1159-7823-02	05	22AA	1
1159-7824-01	05	36AA	1
1159-7825-01	05	18AA	1
1159-7826-02	05	20AA	2
1159-7833-01	05	32AA	1
1159-7834-01	05	27AA	1
1159-7835-01	05	29AA	1
1159-7836-01	07	11AA	2
1159-7837-01	07	07AA	2
1159-7838-01	05	28AA	1
1159-7839-01	05	16AA	1
1159-7840-01	05	14AA	1
1159-7841-01	07	06AA	1
1159-7842-01	07	05AA	1
1159-7843-01	07	12AA	1
1159-7844-01	05	24AA	4
1159-7845-01	07	03AA	1
1159-7846-01	07	02AA	1
1159-7847-01	05	37AA	1
1159-7849-01	05	38AA	1
1159-7851-01	06	07AA	1
1159-7853-01	05	12AA	1
1159-7854-01	05	07AA	1
1159-7855-01	05	08AA	1
1159-7856-02	05	09AA	4
1159-7857-02	05	11AA	4
1159-7857-02	07	04AA	2
1159-7858-01	06	03AA	2
1159-7859-01	05	02AA	2
1159-7862-01	05	03AA	2
1159-7865-02	06	04AA	4
1159-7867-01	06	06AA	1
1160-0101-05	08	01AA	1
1160-0201-02	13	20AA	1
1160-0380-02	01	13AA	1
1160-1006-01	01	14AA	1
1160-2001-01	06	14AA	1
1160-3130-01	01	19AA	1
1160-3501-03	14	34AA	1
1160-3504-03	14	32AA	1
1160-3508-01	14	29AA	2
1160-7307-01	01	18AA	1
1160-7308-01	01	18BA	1
1160-7311-02	16	12AA	1
1160-7312-02	16	12BA	1
1160-7801-01	07	13AA	1
1200-3121-07	14	07AA	2
1200-3134-16	14	14AA	2
1200-3201-09	12	18AA	2
1200-3221-06	09	31AA	1
1274-2611-01	14	22AA	1
1500-2620-01	12	09AA	1
9313-1610-81	08	16AA	1
9313-1610-91	08	36AA	1
9313-1611-01	08	21AA	1
9314-2610-11	03	01AA	1
9314-2610-11	15	12AA	1
9321-2310-22	09	19AA	1
9321-2610-51	14	05AA	1
9321-2610-71	04	02AA	1
9322-1511-21	04	20AA	1
9322-1511-21	14	09AA	1
9326-2320-21	06	05AA	1
9332-5610-51	13	21AA	1
9334-1610-21	12	38AA	1
9334-2610-11	03	19AA	1
9335-1310-31	03	17AA	2
9335-1310-31	04	25AA	1
9335-1310-31	06	11AA	1
9335-1310-31	07	08AA	1
9335-1310-31	08	22AA	1
9335-1310-31	12	21AA	1
9335-1310-31	14	26AA	1
9346-3610-31	13	19BA	2
9346-3710-11	13	22AA	1
9346-3720-51	13	19AA	1
9372-2610-42	12	30AA	1
9381-4310-81	13	18BA	1
9381-4610-31	13	18AA	1
9384-1310-81	17	01AA	12
9384-1311-01	17	03AA	5
9384-1600-04	17	08AA	1
9384-1820-31	17	02AA	1
9384-1821-41	17	09AA	2
9384-1900-56	08	02AA	1
9384-1900-56	13	12AA	2
9384-2010-21	17	06AA	7
9384-2010-31	17	07AA	1

Almost all parts having part numbers the four leftmost digits of which are 1159 are parts which are also used in the EP10301/1031F.
Since the number of these parts is great, they have been omitted from this list.

PART NO.	OTHER MODELS IN WHICH THIS PART IS BEING USED
0996-3014-03	EP1031/1031F
1038-4426-01	EP1031/1031F
1045-5401-01	EP1031/1031F
1050-4707-02	EP1031/1031F
1052-2306-01	EP1031/1031F,EP8015
1053-3869-01	EP1031/1031F,EP1050
1065-1360-01	EP1031/1031F,EP2010
1065-5872-01	EP1031/1031F,EP8015
1066-1120-01	EP1031/1031F
1067-1737-12	EP1031/1031F
1067-1814-01	EP1031/1031F
1067-1841-01	EP1031/1031F
1067-1907-01	EP1031/1031F
1067-2501-01	EP1031/1031F,EP5000
1067-2502-01	EP1031/1031F
1067-3003-01	EP1031/1031F
1067-3005-01	EP1031/1031F
1067-3026-01	EP1031/1031F
1067-3045-01	EP1031/1031F
1067-3058-01	EP1031/1031F
1067-3502-01	EP1031/1031F
1067-3513-01	EP1031/1031F
1067-3517-01	EP1031/1031F,EP1080
1067-4112-02	EP1031/1031F
1067-5035-01	EP1031/1031F
1067-5044-02	EP1031/1031F
1067-5313-02	EP1031/1031F
1067-5327-01	EP1031/1031F
1067-5509-01	EP1031/1031F,EP2080
1080-7303-01	EP1031/1031F
1132-5034-01	EP1031/1031F
1132-5306-01	EP1031/1031F
1132-5311-01	EP1031/1031F
1132-5312-01	EP1031/1031F
1132-5533-01	EP1031/1031F
1136-2131-03	EP1031/1031F,EP8015
1136-6052-12	EP1031/1031F,EP5000
1138-7810-01	EP1031/1031F
1139-1039-01	EP1031/1031F,EP2080
1139-1422-01	EP1031/1031F,EP2080
1139-1608-01	EP1031/1031F,EP5000
1139-3008-01	EP1031/1031F,EP2010
1139-5250-01	EP1031/1031F,EP5000
1139-7332-01	EP1031/1031F,EP2080
1142-7302-01	EP1031/1031F,EP2080
1144-0168-01	EP1031/1031F
1144-0168-01	EP1031/1031F
1151-3061-01	EP1031/1031F
1151-7308-01	EP1031/1031F,EP2010
1200-3121-07	EP1031/1031F,EP2010
1200-3134-16	EP1031/1031F,EP8015
1200-3201-09	EP1031/1031F
1200-3221-06	EP1031/1031F,EP2050
1274-2611-01	EP1031/1031F,EP8015
1500-2620-01	EP1031/1031F
9313-1610-81	EP1031/1031F
9313-1610-91	EP1031/1031F
9313-1611-01	EP1031/1031F
9314-2610-11	EP1031/1031F,EP2010
9321-2310-22	EP1031/1031F,EP8015
9321-2610-51	EP1031/1031F
9321-2610-71	EP1031/1031F
9322-1511-21	EP1031/1031F
9326-2320-21	EP1031/1031F,EP8015
9332-5610-51	EP1031/1031F
9334-1610-21	EP1031/1031F
9334-2610-11	EP1031/1031F,EP8015
9335-1310-31	EP1031/1031F,EP8015
9346-3610-31	EP1031/1031F
9346-3710-11	EP1031/1031F
9346-3720-51	EP1031/1031F,EP5000
9372-2610-42	EP1031/1031F
9381-4310-81	EP1031/1031F,EP8015
9381-4610-31	EP1031/1031F,EP6001
9384-1310-81	EP1031/1031F,EP8015
9384-1311-01	EP1031/1031F,EP8015
9384-1600-04	EP1031/1031F,EP8015
9384-1820-31	EP1031/1031F,EP8015
9384-1821-41	EP1031/1031F
9384-1900-56	EP1031/1031F,EP8015
9384-2010-21	EP1031/1031F,EP8015
9384-2010-31	EP1031/1031F,EP8015

PART NO.	OTHER MODELS IN WHICH THIS PART IS BEING USED

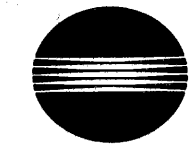

MINOLTA

Copyright
1997 MINOLTA Co.,Ltd.
Printed in Japan

1160-7995-21 97096250