1159SBT000AA

EP1030/EP1030F
EP1031/EP1031F

TROUBLESHOOTING

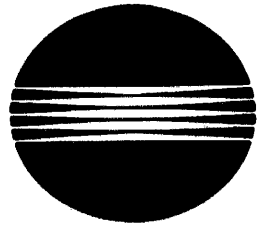

MINOLTA

CONTENTS

1 INTRODUCTION

1-1. General Precautions ..... T- 1
1-2. How to Use This Book ..... T- 1
1-3. Reading the Text ..... T- 1

2 PAPER TRANSPORT FAILURE

2-1. Misfeed Detection Types and Detection Timings ..... T- 2
2-2. Misfeed Clearing Procedures ..... T- 4
1) Copier Paper Take-Up Misfeed ..... T- 4
2) Transport Misfeed ..... T- 6
3) Multi Bypass Misfeed (EP1031/EP1031F) ..... T- 8
4) Exit Misfeed T-10
5) SDH Misfeed (EP1031/EP1031F) T-12

3 MALFUNCTIONS

3-1. Detection Timings Classified by Malfunction Codes T-14
3-2. Troubleshooting Procedures T-16
1) C00: Main Drive Motor's Failure to Turn T-16
2) C04: Ozone Fan Motor's Failure to Turn T-17
3) C40: Exposure Lamp Malfunction T-18
4) C50: Warming-up Failure T-19
C51: Abnormally Low Fusing Temperature T-20
C52: Abnormally High Fusing Temperature T-20
5) C60: Scanner Drive Malfunction T-21
C61: Lens Drive Malfunction (EP1031/EP1031F) T-22
6) CF1: AE Sensor Malfunction T-23
7) CF3: ATDC Sensor Malfunction T-24
8) E0: EEPROM Malfunction T-25
9) E1: IU Toner Detection Failure T-26
E2: Blown IU Fuse Detection Failure T-26
3-3. Power Malfunctions T-27

4

5	IMAGE FAILURE

5-1. Image Failure Troubleshooting T-28
5-2. Initial Checks T-28
5-3. Troubleshooting Procedures Classified by Image Failure T-29

1139SBT0100A

1 INTRODUCTION

1159SBT0101A

1-1. General Precautions

1. When servicing the copier with its covers removed, use utmost care to prevent your hands, clothing, and tools from being caught in revolving parts including the chains and gears.
2. Before attempting to replace parts and unplug connectors, make sure that the power cord of the copier has been unplugged from the wall outlet.
3. Never create a closed circuit across connector pins except those specified in the text and on the printed circuit.
4. When creating a closed circuit and measuring a voltage across connector pins specified in the text, be sure to use the green wire (GND).
5. When the user is using a word processor or personal computer from a wall outlet of the same line, take necessary steps to prevent the circuit breaker from opening due to overloads.
6. Keep all disassembled parts in good order and keep tools under control so that none will be lost or damaged.
7. Adjust, choice, count, and other types of data are stored in TC3 (EEPROM) on Master Board PWB-A. Keep this in mind and take necessary precautions when replacing PWB-A.

1139SBT0102A

1-2. How to Use This Book

1. If a component on a PWB or any other functional unit including a motor is defective, the text only instructs you to replace the whole PWB or functional unit and does not give troubleshooting procedures applicable within the defective unit.
2. All troubleshooting procedures contained herein assume that there are no breaks in the harnesses and cords and all connectors are plugged into the right positions.
3. For the removal procedures of covers and parts, see DIS/REASSEMBLY, ADJUSTMENT.
4. The troubleshooting procedures are given in the order of greater frequency of trouble or order of operation.
5. The procedures preclude possible malfunctions due to noise and other external causes.

1139SBT0103A

1-3. Reading the Text

1. The paper transport failure troubleshooting procedures are given according to the symptom. First identify the location where the paper is present and start the procedure for that particular location. For malfunction troubleshooting, start with step 1 and onward.
2. Make checks in numerical order of steps and, if an item is checked okay, go to the next step.

Pattern 1

Step	Check Item	Result	Action
1	Is...?	YES	Do this.
2		↑	
		Go to step 2 if you answered NO.	

Pattern 2

Step	Check Item	Result	Action
1	Is...?	YES	Do this.
		NO	Check that.
2		↑	
		Go to step 2 if it checks okay.	

1159SBT0200A

2 PAPER TRANSPORT FAILURE

1159SBT0201A

2-1. Misfeed Detection Types and Detection Timings

When a misfeed occurs, the corresponding misfeed code (the appropriate one of those shown below) starts blinking to let the user know where the misfeed has occurred.

Misfeed Code	Type	Detection Timing
PC	Paper take-up misfeed or Paper empty	• Paper Transport Sensor PC2 is not blocked (L) even after the lapse of approx. 3.3 sec. after Paper Take-Up Solenoid SL2 has been energized. • Paper Transport Sensor PC2 is not blocked (L) even after the lapse of approx. 1.6 sec. after Multi Bypass Paper Take-Up Solenoid SL3 has been energized.
J2	Transport misfeed	• Paper Exit Sensor PC3 is not blocked (L) even after the lapse of approx. 2 sec. after Registration Clutch CL1 has been energized. • PC2 is not unblocked (H) even after the lapse of approx. 2.9 sec. (Cassette) or 3.2 sec. (Manual bypass) after Registration Clutch CL1 has been energized.
J3	Exit misfeed	• Paper does not move past Paper Exit Sensor PC3 even after the lapse of approx. 3 sec. after PC2 has been unblocked (H). • PC3 remains blocked for approx. 2 sec. after CL1 has been energized.
J8	SDH misfeed	• SDH Paper Transport Sensor PC23 is not blocked (L) even after the lapse of approx. 2.3 sec. after SDH Paper Take-Up Solenoid SL10 has been energized. • SDH Original Exit Sensor PC24 is not blocked (L) even after the lapse of approx. 1.3 sec. after SDH Registration Clutch CL10 has been energized. • PC23 is not unblocked (H) even after the lapse of approx. 4.4 sec. after CL10 has been energized. • PC24 is not unblocked (H) even after the lapse of approx. 1.7 sec. after PC23 has been unblocked (H).

<Misfeed Detecting Sensor Layout>

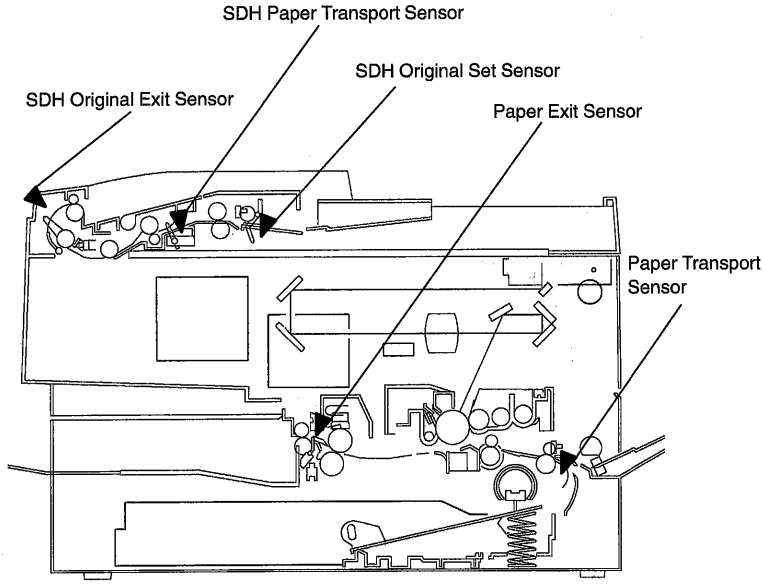

1159SBT0202A

2-2. Misfeed Clearing Procedures

1159SBT020201A

1) Copier Paper Take-Up Misfeed

Relevant Electrical Parts	
• Paper Transport Sensor (PC2)	• Paper Take-Up Solenoid (SL2) • Master Board (PWB-A)

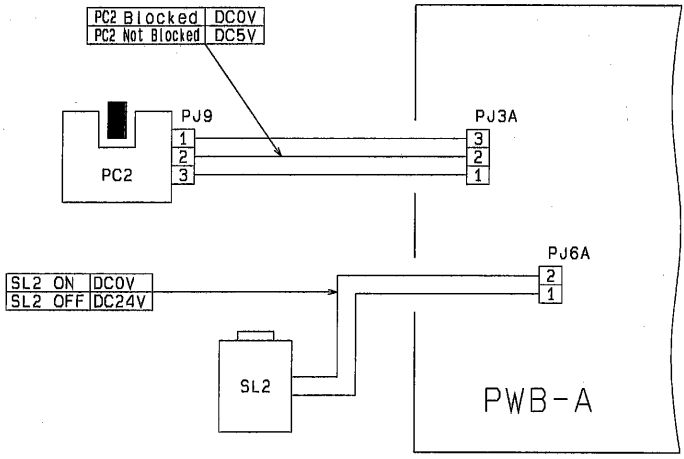

1159C01TAA

◆Copier Paper Take-Up Misfeed Clearing Procedure

Symptom	Step	Check Item	Result	Action
• Paper is not taken up at all.	1	Does the paper being used meet product specifications?	NO	Instruct the user to use the paper that meets product specifications.
	2	Is the paper curled, waved, or damp?	YES	Change the paper. Instruct the user in how to store the paper.
	3	Is the Paper Take-Up Roll deformed, worn, or dirty with paper dust?	YES	Clean or change the Paper Take-Up Roll.
	4	Check Paper Take-Up Solenoid SL2. Does the voltage across PJ6A-2 on PWB-A and GND change from DC24V to DC0V when the Start key is pressed?	YES	Change SL2.
			NO	Change PWB-A.
• Paper is stationary at the Transport Rollers.	1	Are the Transport Rollers deformed, worn, or dirty with paper dust?	YES	Clean or change the Paper Take-Up Roll.
	2	Does the voltage across PJ3A-2 on PWB-A and GND change from DC5V to DC0V when Paper Transport Sensor PC2 is blocked?	NO	Check the PC2 actuator for operation and, if it checks okay, change PC2.

2) Transport Misfeed

Relevant Electrical Parts	
• Paper Transport Sensor (PC2)	• Registration Clutch (CL1) • High Voltage Unit (HV1) • Master Board (PWB-A)

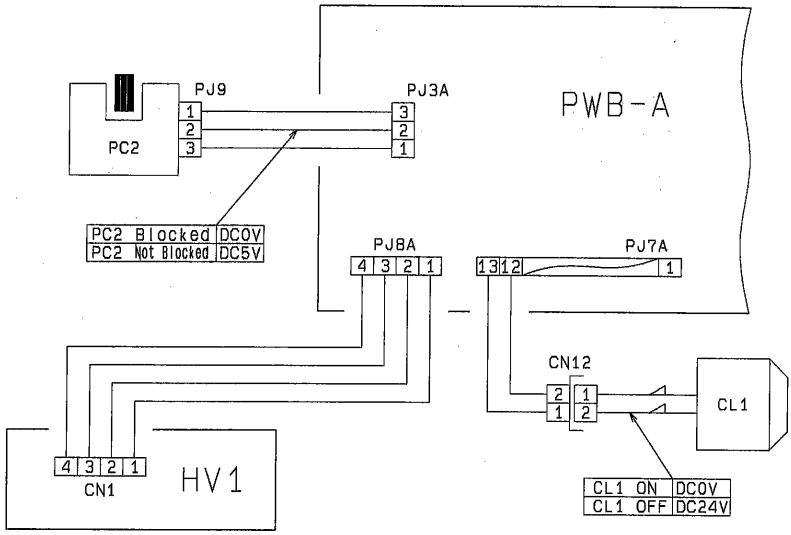

1159C02TAA

◆Transport Misfeed Clearing Procedure

Symptom	Step	Check Item	Result	Action
Paper is stationary at the Synchronizing Roller.	1	Is the paper curled, waved, or damp?	YES	Change the paper. Instruct the user in how to store the paper.
	2	Does the paper being used meet product specifications?	NO	Instruct the user to use the paper that meets product specifications.
	3	Check Registration Clutch CL1. Does the voltage across PJ7A-13 on PWB-A and GND change from DC24V to DC0V after the Start key has been pressed?	YES	Change CL2.
			NO	Change PWB-A.
	4	Does the voltage across PJ3A-2 on PWB-A and GND change from DC5V to DC0V when Paper Transport Sensor PC2 is blocked?	NO	Check the PC2 actuator for operation and, if it checks okay, change PC2.
Paper is stationary near the PC Drum.	1	Is the Pre-Image Transfer Guide Plate deformed or dirty?	YES	Clean or change the guide plate
	2	Is the Image Transfer Corona wire deteriorated or dirty?	YES	Clean or change the wire.
	3	Is the Comb Electrode deteriorated or dirty?	YES	Clean or change the Comb Electrode.
	4	Is the paper guide at the Paper Separator Corona deformed or dirty?	YES	Clean or change the paper guide.
	5	Are the Synchronizing Rollers deformed, worn, or dirty with paper dust?	YES	Clean or change the Synchronizing Rollers.
	6	Is paper wound around the PC Drum?	YES	Change the Image Transfer/ Paper Separator Coronas Assy or HV1.
Paper is stationary before the Fusing Unit.	1	Do the Fusing Rollers turn when the Main Drive Motor is energized?	NO	Check the drive transmission path.

1159SBT020203A

3) Multi Bypass Misfeed

Relevant Electrical Parts	
• Paper Take-Up Sensor (PC2)	• Multi Bypass Paper Take-Up Solenoid (SL3) • Master Board (PWB-A)

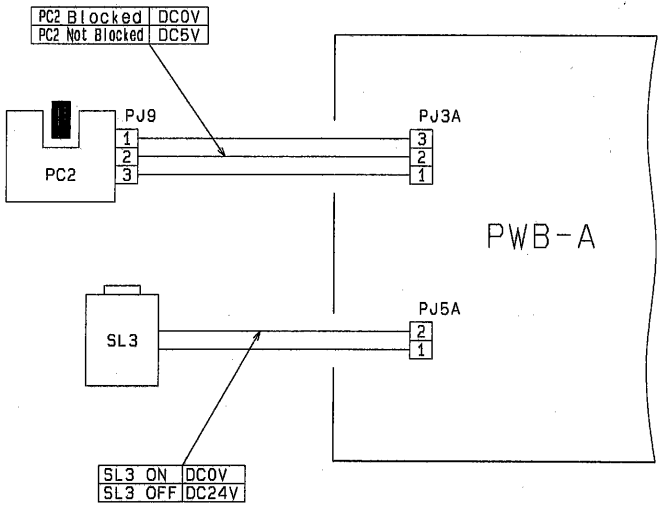

1159C03TAA

◆Multi Bypass Misfeed Clearing Procedure

Symptom	Step	Check Item	Result	Action
• Paper is not taken up at all.	1	Does the paper being used meet product specifications?	NO	Instruct the user to use the paper that meets product specifications.
	2	Is the paper curled, waved, or damp?	YES	Change the paper. Instruct the user in how to store the paper.
	3	Is the Multi Bypass Paper Take-Up Roll deformed, worn, or dirty with paper dust?	YES	Clean or change the Multi Bypass Paper Take-Up Roll.
	4	Does the voltage across PJ3A-2 on PWB-A and GND change from DC5V to DC0V when Paper Take-Up Sensor PC2 is blocked?	NO	Check the PC2 actuator for operation and, if it checks okay, change PC2.
	5	Check Multi Bypass Paper Take-Up Solenoid SL3. Does the voltage across PJ5A-2 on PWB-A and GND change from DC24V to DC0V when the Start key is pressed?	YES	Change SL3.
			NO	Change PWB-A.

1159SBT020204A

4) Exit Misfeed

Relevant Electrical Parts	
• Paper Exit Sensor (PC3)	• Master Board (PWB-A)

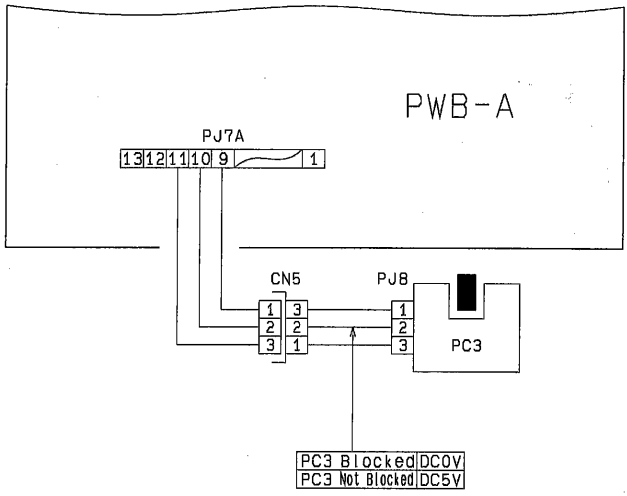

1159C04TAA

◆Exit Misfeed Clearing Procedure

Symptom	Step	Check Item	Result	Action
Paper is stationary at the Fusing Roller.	1	Are the Fusing Rollers dirty or scratched?	YES	Clean or change the Fusing Rollers.
	2	Are the Fusing Roller Paper Separator Fingers deformed, worn, or dirty?	YES	Clean or change the defective paper separator fingers.
	3	Is the Cleaning Roller dirty or scratched?	YES	Clean or change the Cleaning Roller.
Paper is stationary at the Exit Roller.	1	Does the voltage across PJ7A-10 on PWB-A and GND change from DC5V to DC0V when Paper Exit Sensor PC3 is blocked?	YES	Change PWB-A.
			NO	Check the PC3 actuator for operation and, if it checks okay, change PC3.

1159SBT020205B

5) SDH Misfeed (EP1030F/EP1031F)

Relevant Electrical Parts	
• SDH Paper Transport Sensor (PC23) • SDH Original Set Sensor (PC22) • SDH Original Exit Sensor (PC24)	• SDH Paper Take-Up Solenoid (SL10) • SDH Drive Motor (M10) • SDH Registration Clutch (CL10) • SDH PWB (PWB-C) • Master Board (PWB-A)

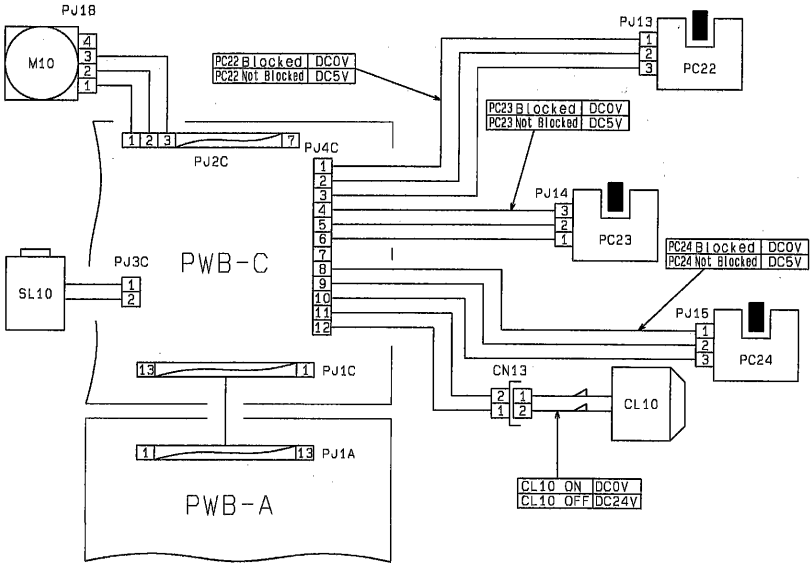

1159C05TAB

◆SDH Misfeed Clearing Procedure

Symptom	Step	Check Item	Result	Action
Document is not taken up at all.	1	Does the document being used meet specifications for reliable feeding?	NO	Instruct the user to use a document that meets specifications for reliable feeding.
	2	Do the documents loaded exceed the capacity of the SDH?	YES	Ask the user to keep within the SDH document capacity.
	3	Are the Document Take-Up and Separator Rolls deformed, worn, or dirty with paper dust?	YES	Clean or change the Document Take-Up and Separator Rolls.
	4	Does the voltage across PJ4C-2 on PWB-C and GND change from DC5V to DC0V when SDH Original Set Sensor PC22 is blocked?	NO	Check the PC22 actuator for operation and, if it checks okay, change PC22.
	5	Check SDH Drive Motor M10. Is the voltage across PJ1A-8 on PWB-A and GND DC24V when the Start key is pressed?	NO	Change PWB-A or PWB-C.
			YES	Change M10.
	6	Check SDH Paper Take-Up Solenoid SL10. Does the voltage across PJ1A-6 on PWB-A and GND change from DC24V to DC0V when the Start key is pressed?	YES	Change SL10.
			NO	Change PWB-A or PWB-C.
Document is stationary at the Registration Roller.	1	Is the Registration Roller deformed, worn, or dirty with paper dust?	YES	Clean or change the Registration Roller.
	2	Does the voltage across PJ4C-5 on PWB-C and GND change from DC5V to DC0V when SDH Paper Transport Sensor PC23 is blocked?	NO	Check the PC23 actuator for operation and, if it checks okay, change PC23.
	3	Check SDH Registration Clutch CL10. Does the voltage across PJ1A-7 on PWB-A and GND change from DC24V to DC0V after the Start key has been pressed?	YES	Change CL10.
			NO	Change PWB-A or PWB-C.
Document is stationary at the Exit Roller.	1	Is the Exit Roller deformed, worn, or dirty with paper dust?	YES	Clean or change the Exit Roller.
	2	Does the voltage across PJ4C-9 on PWB-C and GND change from DC5V to DC0V when SDH Original Exit Sensor PC24 is blocked?	NO	Check the PC24 actuator for operation and, if it checks okay, change PC24.
			YES	Change PWB-C.

3 MALFUNCTIONS

1159SBT0301A

3-1. Detection Timings Classified by Malfunction Codes

Code	Description	Detection Timing
C00	Main Drive Motor M1's failure to turn	• The lock signal remains HIGH for a continuous 1-sec. or more period while M1 remains energized. • The lock signal remains LOW for a continuous 1-sec. or more period while M1 remains deenergized.
C04	Ozone Fan Motor M3's failure to turn	The lock signal remains HIGH for a continuous 1-sec. or more period while M3 remains energized.
C40	Exposure Lamp LA1 malfunction	• The AE Sensor output at 91 msec. after the start of a scan motion with LA1 ON is lower than the AE Sensor output when LA1 is OFF. • The AE Sensor output at any timing when the Scanner is at home position with LA1 OFF is higher than the AE Sensor output when LA1 is ON.
C50	Warming-up failure	The surface temperature of the Upper Fusing Roller does not reach a given level after a given period of time during warming-up as detailed below: • From room temperature to 45°C: 10 sec. • From 45 to 80°C: 10 sec. • From 80 to 115°C: 10 sec. • From 115 to 145°C: 15 sec. • From 145 to 160°C: 15 sec.
C51	Abnormally low fusing temperature	The surface temperature of the Upper Fusing Roller is below 150°C after the copier has completed warming up.
C52	Abnormally high fusing temperature	The surface temperature of the Upper Fusing Roller is 230°C or higher after the copier has completed warming up.
C60	Scanner drive malfunction	<When the Power Switch is turned ON> • When the Scanner is at the home position, Scanner Home Position Sensor PC11 does not go from LOW to HIGH even after the lapse of 1 sec. after the Scanner has started a scan motion. • When the Scanner is at a position other than home, PC11 does not go from HIGH to LOW even after the lapse of 8.4 sec. after the Scanner has started a scan motion. <When the Start key is pressed> • PC11 does not go from LOW to HIGH even after the lapse of 1 sec. after the Scanner has started a scan motion. • PC11 does not go from HIGH to LOW even after the lapse of 8.4 sec. after the Scanner has started a return motion.

Code	Description	Detection Timing
C61	Lens drive malfunction	• Lens Home Position Sensor PC12 does not go from LOW to HIGH even when Lens Drive Motor M5 is energized for 750 pulses for the lens movement in the reduction direction. • PC12 does not go from HIGH to LOW even when M5 is energized for 1400 pulses for the lens movement in the enlargement direction.
CF1	AE Sensor malfunction	The output from AE Sensor Board PWB-E is 4.8V or more, or less than 0.4V when the Exposure Lamp is OFF and Scanner at home position.
CF3	ATDC Sensor malfunction	The output from ATDC Sensor UN3 is 4.8V or more, or less than 0.4V.
E0	EEPROM malfunction	Data which must be retained even when power is turned OFF cannot be written to, and read from, the EEPROM.
E1	IU toner detection failure	The output from ATDC Sensor UN3 remains less than 1.0V during an F8 operation.
E2	Blown IU fuse detection failure	The IU fuse is not blown during an F8 operation.

1159SBT0302A
3-2. Troubleshooting Procedures

1159SBT030201A
1) C00: Main Drive Motor's Failure to Turn

Relevant Electrical Parts	
• Main Drive Motor (M1)	• Power Supply Unit (PU1) • Master Board (PWB-A)

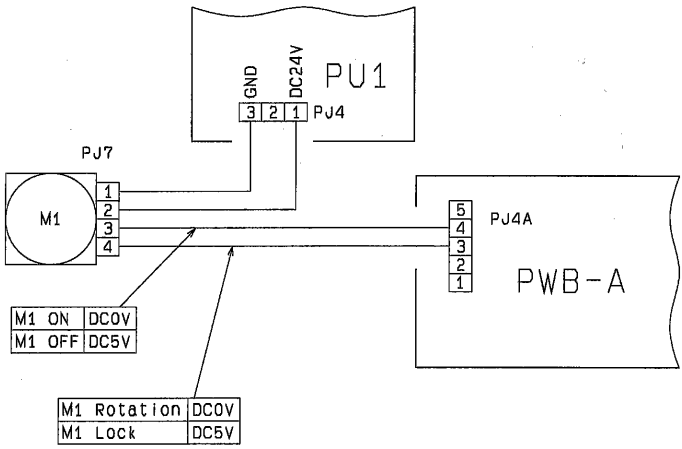

1159C06TAA

Step	Check Item	Result	Action
1	Does the voltage across PJ4A-4 on PWB-A and GND change from DC5V to DC0V when the Start key is pressed?	NO	Change PWB-A.
2	Is the voltage across PJ4A-3 on PWB-A and GND DC0V when Power Switch S1 is turned ON?	YES	Change M1.
3	Is the voltage across PJ4-1 on PU1 and GND DC24V when S1 is turned ON?	NO	Change PU1.

1159SBT030202A

2) C04: Ozone Fan Motor's Failure to Turn

Relevant Electrical Parts	
• Ozone Fan Motor (M1)	• Master Board (PWB-A)

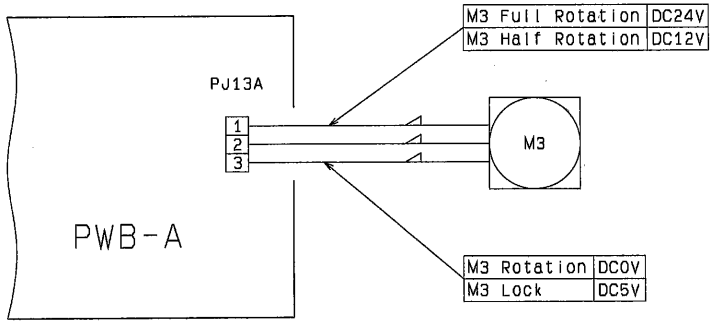

1159C07TAA

Step	Check Item	Result	Action
1	Does the voltage across PJ13A-1 on PWB-A and GND change from DC12V to DC24V when the Start key is pressed?	NO	Change PWB-A.
2	Is the voltage across PJ13A-3 on PWB-A and GND DC5V when S1 is turned ON?	YES	Change M3.

1159SBT030203A

3) C40: Exposure Lamp Malfunction

Relevant Electrical Parts	
• Exposure Lamp (LA1) • Thermal Fuse (TF1)	• AVR (PWB-F) • Master Board (PWB-A)

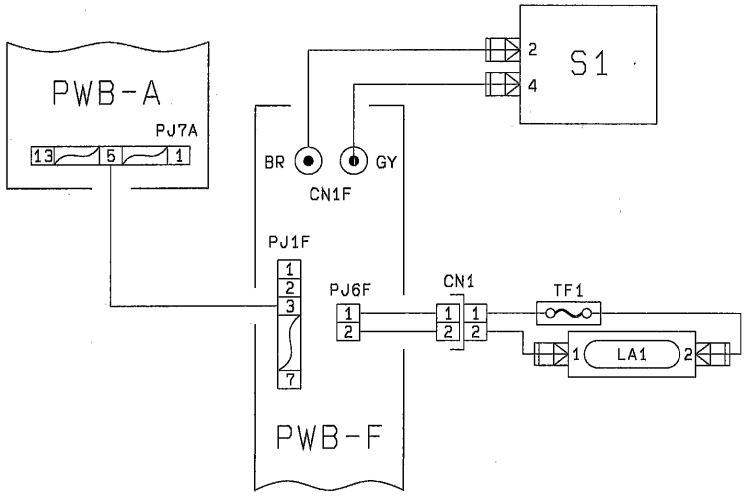

1159C08TAA

Step	Check Item	Result	Action
1	Is the source voltage being supplied across CN1F-GY and -BR on PWB-F?	NO	Check the power line.
2	Is the circuit across PJ6F-1 and -2 on the LA1 side conducting when PJ6F is removed from PWB-F?	YES	Change PWB-F or PWB-A..
		NO	Change LA1 or TF1.

1159SBT030204A

4) C50: Warming-up Failure
C51: Abnormally Low Fusing Temperature
C52: Abnormally High Fusing Temperature

Relevant Electrical Parts	
• Fusing Thermistor (TH1) • Fusing Thermoswitch (TS1)	• AVR (PWB-F) • Master Board (PWB-A)

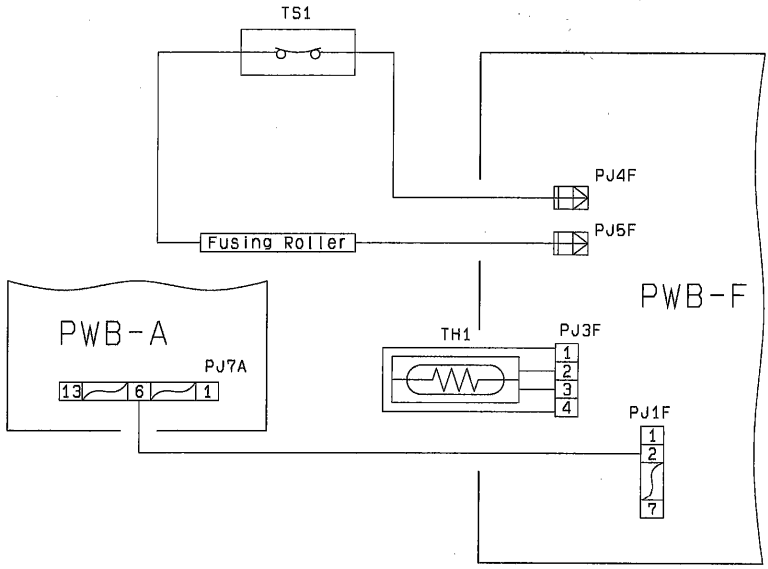

1159C09TAA

◆C50, C51

Step	Check Item	Result	Action
1	Is the source voltage being supplied across PJ4F and PJ5F on PWB-F when S1 is turned ON?	NO	Change PWB-F.
2	Is there continuity across PJ4F and PJ5F on PWB-F as it is checked?	NO	Change the Fusing Unit.
3	Is TH1 installed properly, or dirty?	YES	Reinstall or clean TH1.
4	Measure the resistance of TH1. Is it infinite?	YES	Change TH1.
		NO	Change PWB-F or PWB-A.

◆C52

Step	Check Item	Result	Action
1	Is TH1 installed properly, or dirty?	YES	Reinstall or clean TH1.
2	Measure the resistance of TH1. Is it 0Ω or close to 0?	YES	Change TH1.
		NO	Change PWB-F or PWB-A.

1159SBT030205A

5) C60: Scanner Drive Malfunction

C61: Lens Drive Malfunction (EP1031/EP1031F)

Relevant Electrical Parts	
• Scanner Home Position Sensor (PC11) • Lens Home Position Sensor (PC12)	• Scanner Drive Motor (M4) • Lens Drive Motor (M5) • Master Board (PWB-A)

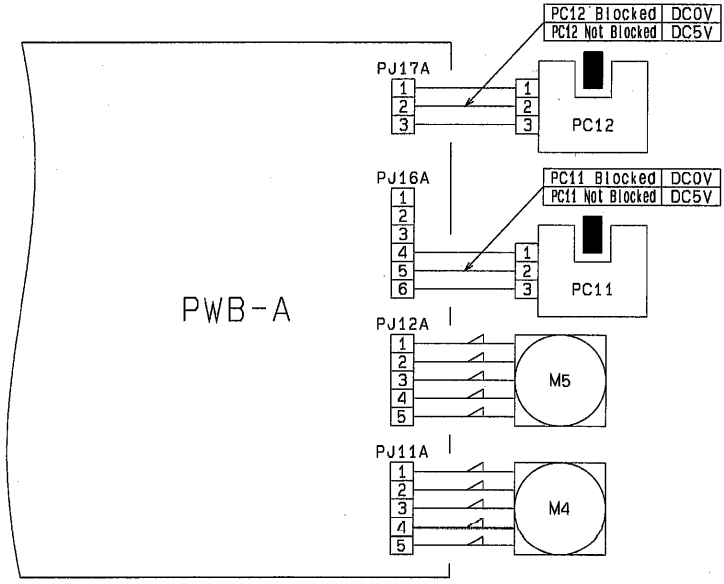

1159C10TAA

◆C60

Step	Check Item	Result	Action
1	Does the voltage across PJ16A-5 on PWB-A and GND change from DC5V to DC0V when Scanner Home Position Sensor PC11 is blocked?	YES	Change PWB-A.
		NO	Change PC11.
2	Is PJ11A on PWB-A connected properly?	YES	Change PWB-A or M4.
		NO	Connect it properly.

◆C61

Step	Check Item	Result	Action
1	Does the voltage across PJ17A-2 on PWB-A and GND change from DC5V to DC0V when Lens Home Position Sensor PC12 is blocked?	YES	Change PWB-A.
		NO	Change PC12.
2	Is PJ12A on PWB-A connected properly?	YES	Change PWB-A or M5.
		NO	Connect it properly.

1159SBT030206A

6) CF1: AE Sensor Malfunction

Relevant Electrical Parts	
• AE Sensor Board (PWB-E)	• Master Board (PWB-A)

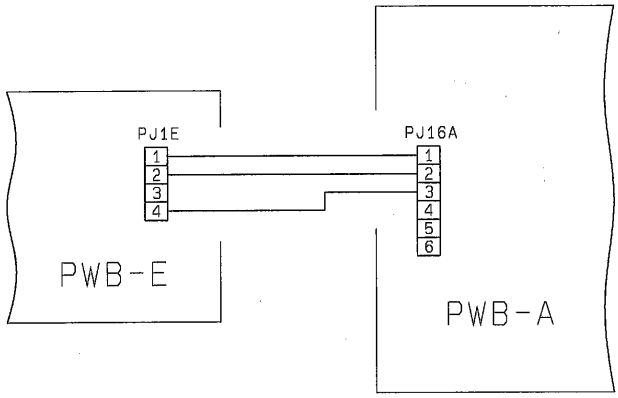

1159C11TAA

Step	Check Item	Result	Action
1	Is the voltage across PJ16A-2 on PWB-A and GND DC4.8V or more, or 0.4V or less when the Exposure Lamp is OFF and Scanner at home position	YES	Change PWB-E.
		NO	Change PWB-A.

1159SBT030207A

7) CF3: ATDC Sensor Malfunction

Relevant Electrical Parts	
• ATDC Sensor (UN3)	• Master Board (PWB-A)

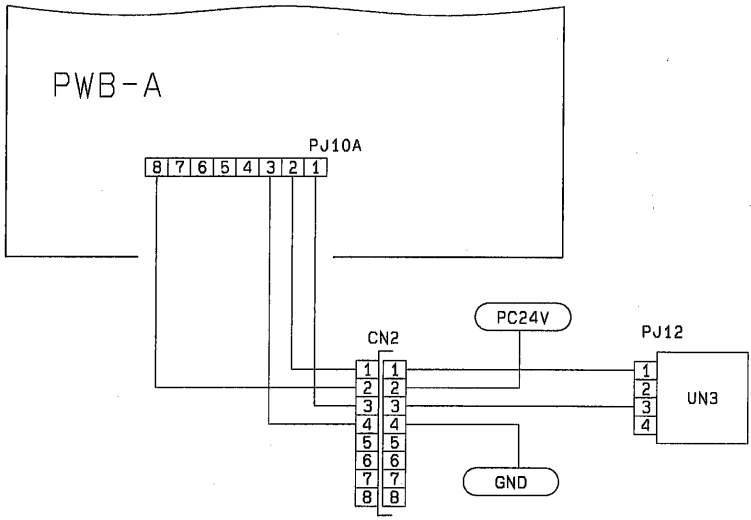

1159C12TAA

Step	Check Item	Result	Action
1	Is the voltage across PJ10A-1 on PWB-A and GND DC4.8V or more, or 0.4V or less?	YES	Change UN3.
		NO	Change PWB-A.

1159SBT030208A

8) E0: EEPROM Malfunction

Relevant Electrical Parts
• Master Board (PWB-A)

Step	Check Item	Result	Action
1	Does "E0" appear again after the malfunction has been reset?	YES	Change EEPROM.
2	Does "E0" appear during a copy cycle?	YES	Change EEPROM.
3	Does "E0" appear when the Power Switch is turned ON?	YES	Change PWB-A.

1159SBT030209A

9) E1: IU Toner Detection Failure
E2: Blown IU Fuse Detection Failure

Relevant Electrical Parts	
• ATDC Sensor (UN3)	• Imaging Unit (IU) • Master Board (PWB-A)

E1

Step	Check Item	Result	Action
1	Did you peel off the seal from the Toner Cartridge?	NO	Peel off the seal.
2	Has the starter been loaded?	YES	Change UN3 or PWB-A.

E2

Step	Check Item	Result	Action
1	Is the fuse blown?	YES	Change the fuse or PWB-A.

3-3. Power Malfunctions

Power is not Turned ON (Control Panel Shows Nothing)

Relevant Electrical Parts	
• Power Switch (S1) • Noise Filter Board (PWB-D)	• AVR (PWB-F) • Power Supply Unit (PU1) • MSC Board (PWB-B) • Master Board (PWB-A)

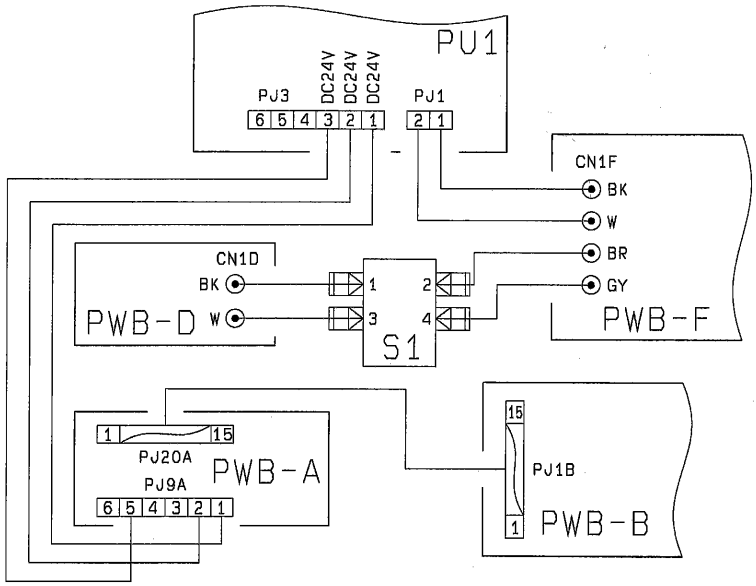

1159C13TAA

Step	Check Item	Result	Action
1	Is the source voltage applied across 1 and 3 of S1?	NO	Change PWB-D.
2	Is the source voltage being applied across 2 and 4 of S1 when it is turned ON?	NO	Change S1.
3	Is the source voltage being applied across 1 and 2 of PJ3 on PU1 when S1 is turned ON?	NO	Change PWB-F.
4	Is the voltage across PJ9A-1 to -3 on PWB-A and GND DC24V when S1 is turned ON?	NO	Change PU1.
5	Is the voltage across PJ9A-1, -2, and -5 on PWB-A and GND DC24V when S1 is turned ON?	NO	Check the wiring between PU1 and PWB-A and, if it is intact, change PU1.
6	Are PJ20A on PWB-A and PJ1B on PWB-B installed properly?	YES	Change PWB-A, PWB-B, and the harness, in that order.
		NO	Install them properly.

1149SAT0500A

5 IMAGE FAILURE

1159SBT0501A

5-1. Image Failure Troubleshooting

Image failures have many possible causes. For troubleshooting, it is necessary to determine whether a failure is attributable to a basic cause or any other cause.

In this chapter, troubleshooting is divided into "initial checks" and "troubleshooting procedures classified by image failure". If an image failure has occurred, first make the initial checks, then proceed to the corresponding image failure troubleshooting procedure.

1159SBT0502A

5-2. Initial Checks

1) Place of installation

- Is the source voltage normal? Does the voltage vary greatly?
- Is the copier installed in a hot, humid place or in a place where temperatures vary sharply?
- Is the copier installed in a dusty place?
- Is the copier subjected to direct sunlight?
- Is the copier level?

2) Copy paper

- Is the recommended paper used?
  ➡Load recommended paper and make copies to see if the problem persists.
- Is the paper damp?
  ➡Load new paper and make copies to see if the problem persists.

3) Original

- Does the original used have a reddish background or is it written in light pencil?
  ➡Use the Test Chart to check the image.
- Is the original transparent or are transparencies being used?
  ➡Cover with white paper and make a copy.
- Are the Original Glass and ADF Transport Belt dirty or scratched?
  ➡If dirty, clean with alcohol. If scratched, replace.

4) PM parts (supplies)

- Have the PM parts (supplies), such as the PC Drum, Cleaning Blade, AIDC Sensor and corona wires, reached the end of their cleaning/replacement cycles?

5) Adjustment items (registration, focus, AE level, etc.)

- Among the adjustment items given in DIS/REASSEMBLY, ADJUSTMENT, is there any adjustment that may remedy the image failure?

5-3. Troubleshooting Procedures Classified by Image Failure

<Image Failure Samples>

1) Blank copy

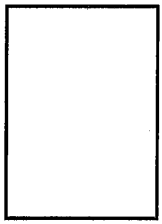

2) Black copy



3) Low image density

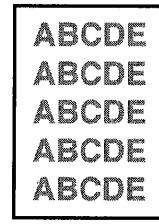

4) Foggy background

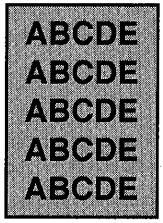

5) Black streaks or bands

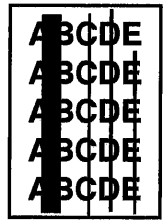

6) Black spots

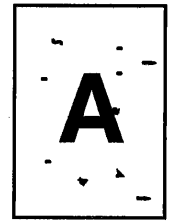

7) Blank streaks or bands

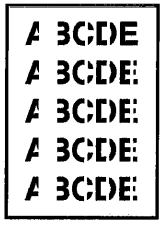

8) Void areas

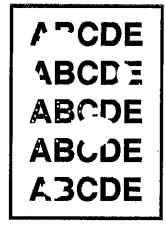

9) Smear on back

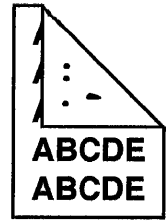

1149T012AA

1159SBT050301A

1) Blank Copy

Cause	Step	Check Item	Result	Action
Charging failure	1	Is the PC Drum Charge Corona installed correctly?	NO	Install correctly.
	2	Are the Comb Electrode wire and grid mesh normal?	NO	Check and change if necessary.
	3	Is the wiring between High Voltage Unit HV1 and the PC Drum Charge Corona normal?	YES	Change HV1.
			NO	Correct the wiring.
Developing Unit out of position	4	Is the Imaging Unit in position?	NO	Reinstall the Unit.
	5	Are the Ds Rolls in contact with the PC Drum?	NO	Reinstall the Developing Unit.
	6	Is the drive transmission mechanism to the Developing Unit intact?	NO	Check and change any defective part.
Image transfer failure	7	Is the Image Transfer Corona wire normal?	NO	Check and change if necessary.
	8	Is the wiring between High Voltage Unit HV1 and corona wire normal?	YES	Change HV1.
			NO	Correct wiring.
Paper guide shorting	9	Is the paper guide shorted to the frame?	YES	Connect the paper guide through the resistor to the frame.

1159SBT050302A

2) Black copy

Cause	Step	Check Item	Result	Action
PC Drum grounding failure	1	Is the PC Drum properly grounded?	NO	Clean or change the PC Drum.
Developing bias failure	2	Is the developing bias contact normal?	NO	Clean or replace the developing bias contact.
Light path failure	3	Has condensation formed on the mirrors, lens, or PC Drum?	YES	Clean the mirrors and lens, and run the Drum Dehum. operation.
	4	Are the mirrors installed properly?	NO	Reinstall the mirrors.
Exposure Lamp's failure to turn ON	5	Does the Exposure Lamp light up?	NO	Take the action for malfunction code C40.

3) Low Image Density

Cause	Step	Check Item	Result	Action
PC Drum life	1	Does the PC Drum have enough service life?	NO	Change the PC Drum.
	2	Do the fan motors turn properly? (Ozone deterioration, temperature rise)	NO	Troubleshoot the fan motors.
PC Drum grounding failure	3	Is the PC Drum grounded properly?	NO	Clean or change the PC Drum.
Drum charge failure	4	Are the Comb Electrode and grid mesh normal?	NO	Check and change if necessary.
	5	Is the wiring between High Voltage Unit HV1 and the PC Drum Charge Corona normal?	YES	Change HV1.
			NO	Correct the wiring.
Optical failure	6	Are the mirrors and lens dirty or covered with condensation?	YES	Clean the mirrors and lens.
Image transfer failure	7	Is the Image Transfer Corona dirty?	YES	Clean the Image Transfer Corona or change the wire.
	8	Is the copy paper damp?	YES	Change the copy paper and instruct the user in how to store paper.
Developing failure	9	Is Db adjusted properly?	NO	Make Db adjustment.
	10	Are the Ds Rolls in contact with the PC Drum?	NO	Reinstall the Developing Unit.

1159SBT050304A

4) Foggy background

Cause	Step	Check Item	Result	Action
Cleaning failure	1	Is the Cleaning Blade dirty with foreign matter, paper dust, etc. or is it scratched?	YES	Change the Cleaning Blade.
Optical failure	2	Are the mirrors and lens dirty?	YES	Clean the mirrors and lens.
PC Drum failure	3	Is the PC Drum dirty with foreign matter, etc.?	YES	Clean or replace the PC Drum. Change the Cleaning Blade if necessary.
	4	Is the PC Drum properly grounded?	NO	Clean or change the PC Drum.
Developing failure	5	Is the Sleeve Roller abnormally dirty?	YES	Clean the Sleeve Roller. Check the Developer Scattering Prevention Seal to see if it is deformed or dirty.
	6	Is the developing bias contact normal?	NO	Clean or change the developing bias contact.

1159SBT050305A

5) Black Streaks or Bands

Cause	Step	Check Item	Result	Action
Uneven charging	1	Are the Comb Electrode and grid mesh dirty?	YES	Clean or replace the PC Drum Charge Corona. Check the toner suction mechanism for operation.
Cleaning failure	2	Is the Cleaning Blade dirty with foreign matter, paper dust, etc., or is it scratched?	YES	Change the Cleaning Blade.
PC Drum failure	3	Is the PC Drum surface dirty or scratched?	YES	Change the PC Drum. If necessary, change the Cleaning Blade.
Fusing failure	4	Is the Upper Fusing Roller dirty or scratched?	YES	Clean or replace the Upper Fusing Roller.
	5	Are the Upper Paper Separator Fingers dirty or deformed?	YES	Clean or replace the Upper Paper Separator Fingers.
Optical failure	6	Are the mirrors and lens dirty with foreign matter?	YES	Clean the mirrors and lens.

1159SBT050306A

6) Black Spots

Cause	Step	Check Item	Result	Action
PC Drum failure	1	Is the PC Drum surface scratched or dirty with foreign matter?	YES	Clean or change the PC Drum. Change the Cleaning Blade if necessary.
Fusing failure	2	Is the Upper Fusing Roller dirty or scratched?	YES	Check the Fusing Thermistors. Clean or change the Upper Fusing Roller.
Developing failure	3	Is the amount of toner on the Sleeve Roller proper?	YES	Go to step 5.
	4	Is the toner-to-carrier ratio relatively high?	YES	Change the toner-to-carrier ratio.
	5	Is the Developer Scattering Prevention Seal deformed or dirty?	YES	Clean or change the Developer Scattering Prevention Seal.

1159SBT050307A

7) Blank Streaks or Bands

Cause	Step	Check Item	Result	Action
Plugged Db	1	Is Db plugged with foreign matter, caked toner, etc.?	YES	Remove foreign matter. If the problem persists, change the developer.
Drum charge failure	2	Are the Comb Electrode and grid mesh dirty?	YES	Clean or change the PC Drum Charge Corona.
Image transfer failure	3	Is the Image Transfer Corona wire dirty?	YES	Clean or change the Image Transfer Corona.
Image Erase Lamp lit at abnormal timing	4	Does the Image Erase Lamp light up at abnormal timing?	YES	Check the Image Erase Lamp.
Fusing failure	5	Is the Upper Fusing Roller dirty or scratched?	YES	Clean or change the Upper Fusing Roller.
	6	Are the Upper Paper Separator Fingers dirty or scratched?	YES	Clean or change the Upper Paper Separator Fingers.

1159SBT050308A

8) Void Areas

Cause	Step	Check Item	Result	Action
Image transfer failure	1	Is the Image Transfer Corona installed properly?	NO	Reinstall.
	2	Is the Image Transfer Corona wire dirty?	YES	Clean or change the Image Transfer Corona wire.
Damp copy paper	3	Is the image improved by loading new paper?	YES	Change the copy paper and instruct the user in how to store paper.
Small amount of toner supplied	4	Is toner uniformly attracted onto the Sleeve Roller?	NO	Check the Db value and amount of developer, and check the Bucket Roller for operation.
Paper guide shorting	5	Is the paper guide shorted to the frame?	YES	Connect the paper guide through the resistor to the frame.
Fusing failure	6	Is the Lower Fusing Roller scratched or deformed?	YES	Replace the Lower Fusing Roller.

1159SBT050309A

9) Smear on Back

Cause	Step	Check Item	Result	Action
Dirty Developing Unit	1	Is the bottom part of the Developing Unit dirty?	YES	Clean and check the Developer Scattering Prevention Seal.
Dirty Image Transfer Corona	2	Is the Image Transfer Corona dirty?	YES	Clean the corona and check the Developing Unit.
	3	Is the Pre-Image Transfer Guide Plate dirty?	YES	Clean the guide plate and check the Developing Unit.
Dirty Fusing Unit	4	Is the Fusing Unit Entrance Guide Plate dirty?	YES	Clean the guide plate and check the Developing Unit.
	5	Are the Upper and Lower Fusing Rollers dirty?	YES	Clean or change the Upper and Lower Fusing Rollers.

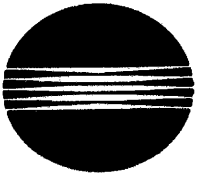

MINOLTA

Copyright
1997 MINOLTA Co., Ltd.
Printed in Japan

Use of this manual should be strictly supervised to avoid disclosure of confidential information.

MINOLTA CO., LTD.

1159-7998-11 97074370
Printed in Japan