PARTS MODIFICATION NOTICE

REF NO. : MO021065
DATE : 2002/11/27
MODEL NAME : EP1030/1030F
MODEL CODE : 1160
PMN NO. : 027B

MODEL NAME : EP1030/1030F
SUBJECT : LAMP HEAT-UP ROLLER VERSION ADDED
KB NO. : - - - - - - - - - -

In EP1030/1030F, the Self Heat-Up Roller has been used in the Fusing Unit. This time, a version of the Lamp Heat-Up Roller is added for these models.
Here are the exclusive parts and additional service information for the new version.

The parts listed below are used only for Lamp Heat-Up Roller version.

1. PW BOARD-A (01)
2. FUSING ROLLER (02)
3. FUSING UNIT (03)
4. HOLDER (04)
5. HOLDER (05)
6. HEATER (06)

The parts listed below are not used in Lamp Heat-Up Roller version.

FIG	INDEX	PART NO.	PART NAME	QTY
08	01	1160-0111-03	PWB ASSY	1
12	07	1159-0182-02	HOLDER	1
12	08	1159-6816-01	HARNESS	1
12	26	1159-5757-14	FUSING ROLLER-UPR	1
12	29	1159-0181-02	HOLDER	1
12	36	1159-6811-01	HARNESS	1
12	43	1159-0395-07	FUSING UNIT	1

Accordingly the following SFIX codes have been newly made.

SFIX CODE	COUNTRY	VOLTAGE	FREQUENCY	PAPER SIZE
261	NORTH EUROPE	220-240V	50Hz	METRIC
262	S. AFRICA/SINGAPORE/ SAUDI ARABIA/MALAYSIA/INDONESIA/ HONG KONG/AUSTRALIA/NEW ZEALAND	220-240V	50Hz	METRIC
271	NORTH EUROPE (WITH SDH)	220-240V	50Hz	METRIC
272	S. AFRICA/SINGAPORE/ SAUDI ARABIA/MALAYSIA/INDONESIA/ HONG KONG/AUSTRALIA/NEW ZEALAND (WITH SDH)	220-240V	50Hz	METRIC

The “I” (Interchangeability) column indicates whether a modified part can be installed in pre-modification machine. If a “Y” is listed under the “I” column, a part under “AFTER MODI. P/NO. ” column can be installed in pre-modification machine and the machine functions properly. If a “S” is listed, there is a new part which is used with the modified part as a set. The set can be installed in pre-modification machine and the machine functions properly. If a “N” is listed, the modified part cannot be installed in pre-modification machine. Even though the modified part could be installed in the machine physically, it would not function properly.
The “SE/No. ” column indicates a serial No. and the following 5 meanings. 1. “Blank” shows that there is no modification.(A revised version will be followed as soon as a serial No. is confirmed.) 2. “*” shows that a modification has been done.(See the above section for the details.) 3. “N/A” shows that a modification has been done.(The serial No. can not be confirmed.) 4. “AFTER” shows parts which are not used in the production line but used only as the spare parts. 5. “DISCON” shows that the model has been discontinued for the production.
The “SFIX” column indicates the area codes (the last three numbers on the item code). The area code “000” means the part can be used in all areas.

FIG.8

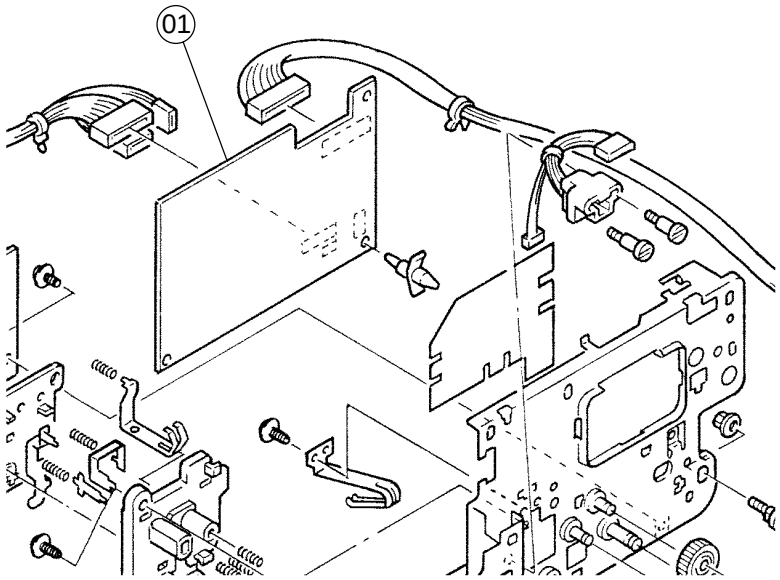

FIG.12

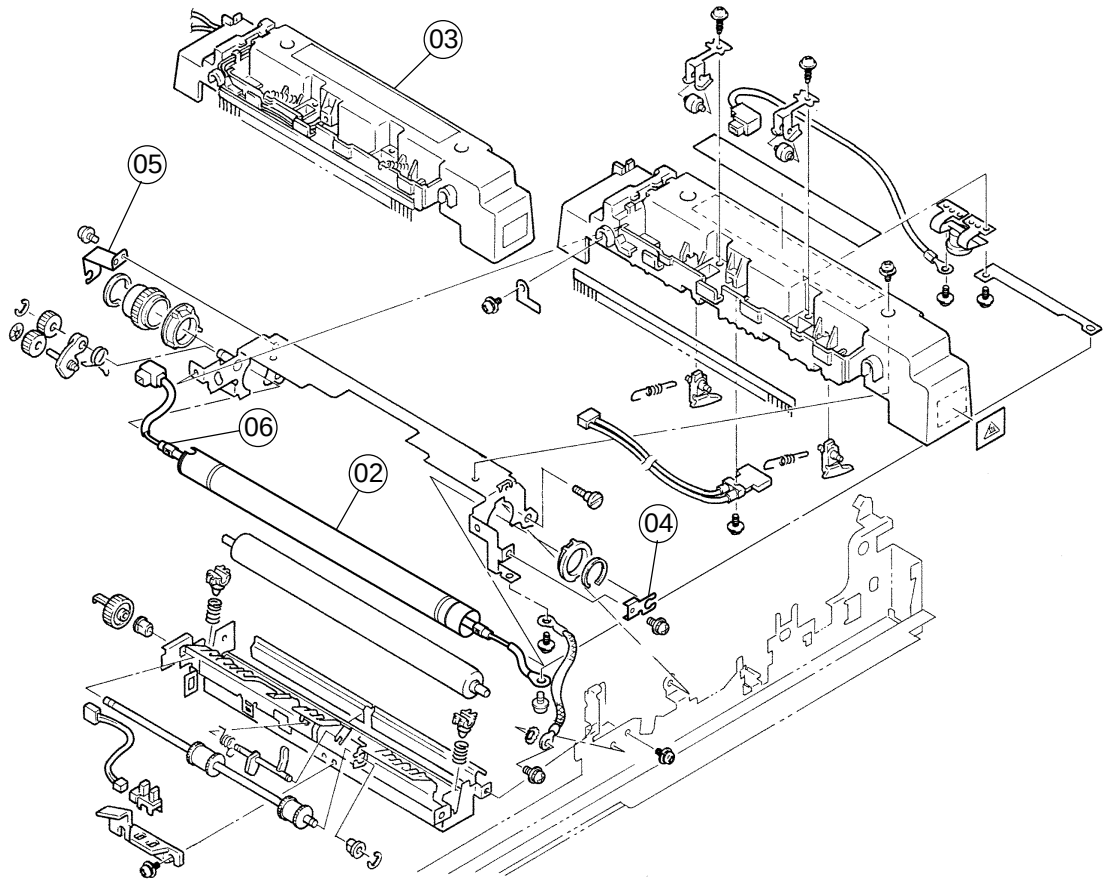

Se/No.

Se/No. is made use of to distinguish between Self Heat-Up Roller version and Lamp Heat-Up Roller version. The third digit in the Se/No. must be :

Self Heat-Up Roller version : 7 or 8
Lamp Heat-Up Roller version : 9

As they are in separate sequences of Se/No. application, a future PMN will show the effective Se/No. in the following form.

∗EFFECTIVE MACHINE Se/No.	
Self Heat-Up Roller version	Lamp Heat-Up Roller version

MODEL CODE	NO.	FIG	IND	BEFORE MODI. P/NO.	AFTER MODI. P/NO.	QTY →	I	PART NAME / SFIX	SE/NO.
1160	01	08	01		1160-0115-01	1	Y	PWB ASSY 261, 262, 271, 272	XX900826
1160	02	12	26		1159-5771-01	1	Y	FUSING ROLLER 261, 262, 271, 272	XX900826
1160	03	12	43		1159-0398-01	1	Y	FUSING UNIT 261, 262, 271, 272	XX900826
1160	04	12	44		1159-5772-01	1	Y	HOLDER 261, 262, 271, 272	XX900826
1160	05	12	45		1159-5773-01	1	Y	HOLDER 261, 262, 271, 272	XX900826
1160	06	12	46		1159-6512-01	1	Y	HEATER 261, 262, 271, 272	XX900826

EP1030/EP1030F
EP1031/EP1031F

SUPPLEMENTARY INFORMATION FOR SERVICE MANUAL

CONTENTS

1. ADDITIONS TO SPECIFICATIONS 5
2. DETAILS OF LAMP HEAT-UP ROLLER SYSTEM SPECIFICATIONS ADDED 6
   2-1. Fusing Unit 6
   2-2. Fusing Temperature Control 6
   2-3. Removal of the Fusing Unit 7
   2-4. Detection Timings Classified by Malfunction Codes 10

1. ADDITIONS TO SPECIFICATIONS

FUSING SYSTEM	Heated roller fusing
WARMING-UP TIME	18.0 sec. or less

POWER/CURRENT CONSUMPTION

	115V	120V	127V	220V	230V	240V
Exposure Lamp (Rating)	80V 200W	80V 200W	80V 200W	160V 200W	160V 200W	160V 200W
Fusing Heater (Rating)	115V 650W	115V 650W	115V 650W	220V 650W	220V 650W	220V 650W
Max. power consumption	870W	920W	980W	910W	960W	1010W
In standby	300W	320W	350W	300W	320W	340W

2. DETAILS OF LAMP HEAT-UP ROLLER SYSTEM SPECIFICATIONS ADDED

2-1. Fusing Unit

The Lamp Heat-Up Roller system is added to the fusing system. The Upper Fusing Roller heated by the Heater Lamp and the Lower Fusing Roller are pressed tightly up against each other and paper is fed through the space between these two rollers so that the toner image is fused in the paper.

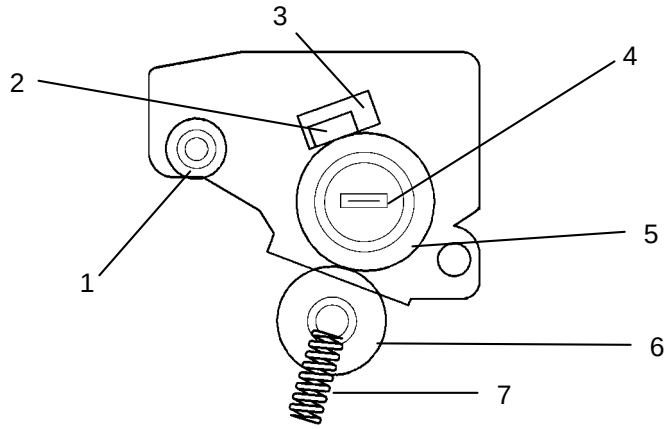

1. Paper Exit Roller
2. Fusing Thermister
3. Fusing Thermoswitch
4. Fusing Roller Heater Lamp
5. Upper Fusing Roller
6. Lower Fusing Roller
7. Pressure Spring

2-2. Fusing Temperature Control

Warming-up Time = Within 18 sec.

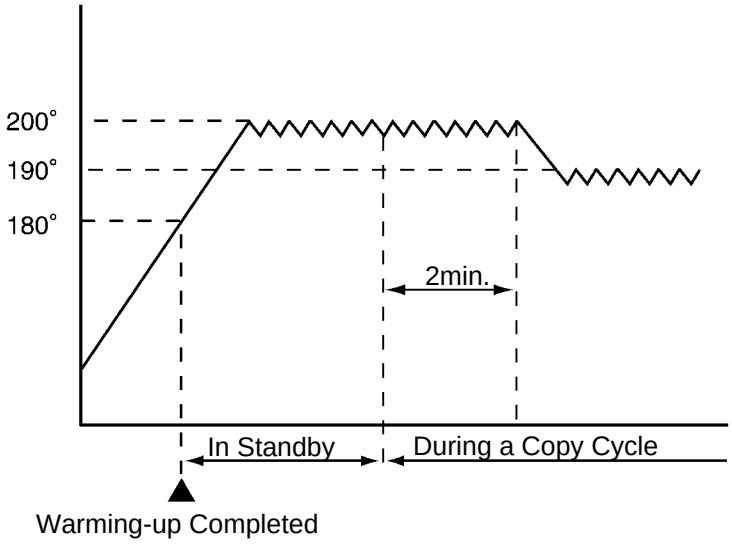

2-3. Removal of the Fusing Unit

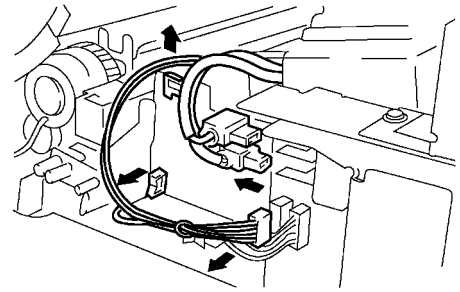

1. Swing down the Front Door.
2. Release and swing up the Upper Half of the copier.
3. Remove the three screws and the Middle Rear Left Cover.
4. Remove the Harness for the Fusing Unit from the Edge Cover and remove it from the Cord Clamp.
5. Remove two terminals for the Fusing Unit.

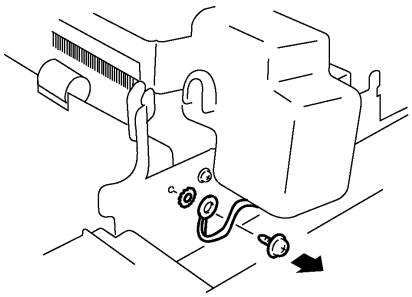

6. Remove one screw, two washers and Ground Wire from the Fusing Unit.

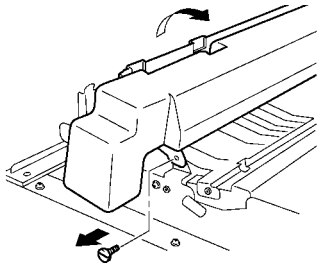

7. Remove one Shoulder Screw, turn the Fusing Unit in the direction of the arrow and remove it.

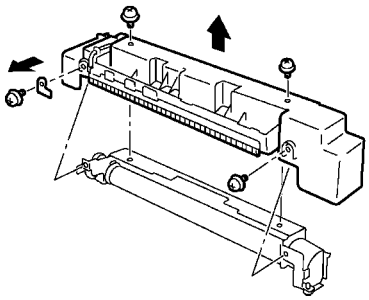

8. Remove one screw and the Bracket.
9. Remove the three screws and the Cover for the Fusing Unit.

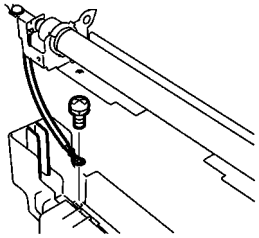

10. Remove one screw and remove the Front Heater Harness from the Cover.

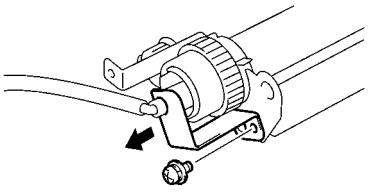

11. Remove one screw and the Holder.

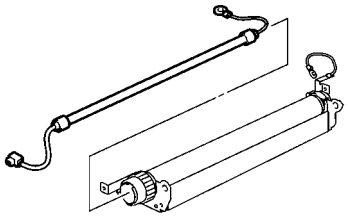

12. Remove the Fusing Roller Heater Lamp.

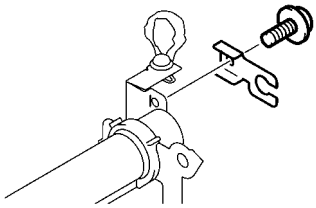

13. Remove one screw and the Holder.

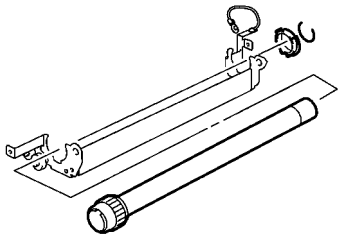

14. Remove one C-clip.
15. Remove the Fusing Roller.
16. Remove one Bushing.

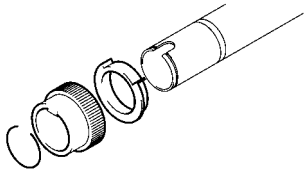

17. Remove one C-clip.
18. Remove the Spur Gear.
19. Remove the Bushing.

2-4. Detection Timings Classified by Malfunction Codes

Code	Description	Detection Timing
C50	Warming-up Failure	The set temperature is not reached within a given period of time after the warm-up cycle has been started. · 0°C to 60°C: 18 sec. · 60°C to 120°C: 18 sec. · 120°C to 160°C: 12 sec. · 160°C to 180°C: 6 sec.
C51	Abnormally low fusing temperature	The temperature detected by the Thermistor is less than 150°C after the warm-up cycle has been completed.
C52	Abnormally high fusing temperature	The temperature detected by the Thermistor is 230°C or higher after the warm-up cycle has been completed.

(1) C50: Warming-up Failure
C51: Abnormally Low Fusing Temperature
C52: Abnormally High Fusing Temperature

Relevant Electrical Parts	
·Fusing Roller Heater Lamp (H1)	·AVR
·Fusing Thermoswitch (TS1)	·Master Board (PWB-A)

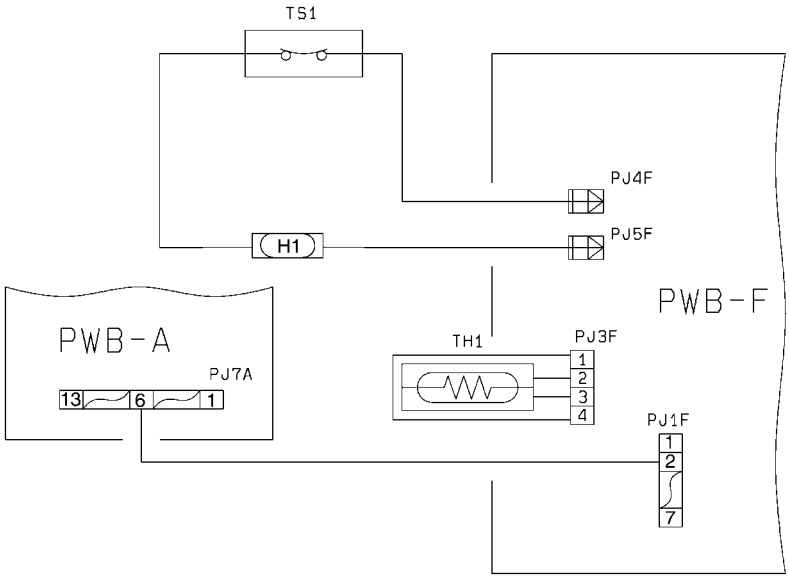

◆C50, C51

Step	Check Item	Result	Action
1	Is the source voltage being supplied across PJ4F and PJ5F on PWB-F when S1 is turned ON?	NO	Change PWB-F.
2	Is there continuity across PJ4F and PJ5F on PWB-F as it is checked?	NO	Change the Fusing Unit.
3	Is TH1 installed properly, or dirty?	YES	Reinstall or clean TH1.
4	Measure the resistance of TH1. Is it infinite?	YES	Change TH1.
		NO	Change PWB-F or PWB-A.

◆C52

Step	Check Item	Result	Action
1	Is TH1 installed properly, or dirty?	YES	Reinstall or clean TH1.
2	Measure the resistance of TH1. Is it 0Ω or close to 0?	YES	Change TH1.
		NO	Change PWB-F or PWB-A.