1159SBG000AA

EP1030/EP1030F
EP1031/EP1031F

GENERAL, MECHANICAL/ ELECTRICAL

MINOLTA

1159SBG000BA

CONTENTS

GENERAL

1. SPECIFICATIONS G-1
2. PRECAUTIONS FOR INSTALLATION G-6
3. PRECAUTIONS FOR USE G-7
4. HANDLING OF THE CONSUMABLES G-8
5. SYSTEM CONFIGURATION G-9

1159SBM000BA

MECHANICAL/ELECTRICAL

1. CROSS-SECTIONAL VIEW M-1
2. COPY PROCESS M-2
3. DRIVE SYSTEM M-4
4. OPERATIONAL SEQUENCE M-5
5. PC DRUM M-8
6. IMAGING UNIT M-9
   - 6-1. Imaging Unit Drive M-10
   - 6-2. Toner Recycling M-11
   - 6-3. IU Fuse F1 ..... M-11
7. DEVELOPMENT M-12
   - 7-1. ATDC Sensor M-13
   - 7-2. Magnet Roller M-15
   - 7-3. Developing Bias M-16
   - 7-4. Doctor Blade M-17
   - 7-5. Magnet Roller Lower Filter M-17
8. CLEANING UNIT M-18
9. TONER HOPPER M-19
   - 9-1. Toner Replenishing M-19
   - 9-2. Toner Replenishing Control M-20
10. DRUM CHARGING M-21
11. IMAGE ERASE LAMP (EP1031/EP1031F ONLY) M-22

CONTENTS

12. OPTICAL SECTION M-24

12-1. Exposure Lamp LA1 ..... M-25
12-2. AE Sensor M-26
12-3. Lamp Reflectors M-27
12-4. Aperture Plates M-27
12-5. Scanner and 2nd/3rd Mirror Carriage Movement M-28
12-6. 4th Mirror Movement (EP1031/EP1031F ONLY) M-30
12-7. Lens Movement (EP1031/EP1031F ONLY) M-31

13. MAIN ERASE LAMP M-32

14. IMAGE TRANSFER AND PAPER SEPARATION M-33

15. PAPER TAKE-UP/FEED SECTION M-34

15-1. Edge Guide and Trailing Edge Stop M-35
15-2. Drawer Positioning M-36
15-3. Paper Lifting Plate M-36
15-4. Paper Empty Detection M-37
15-5. Paper Separating Mechanism M-38
15-6. Paper Take-Up Roll M-39
15-7. Paper Take-Up Retry Control M-40

16. VERTICAL PAPER TRANSPORT M-41

17. SYNCHRONIZING ROLLERS M-42

17-1. Upper Synchronizing Roller Positioning M-43
17-2. Paper Dust Remover M-43
17-3. Synchronizing Roller Control M-44

18. PAPER TRANSPORT M-45

19. FUSING UNIT M-46

19-1. Fusing Temperature Control M-47
19-2. Fusing Rollers Pressure Mechanism M-48

20. EXIT UNIT M-49

20-1. Upper/Lower Separator Fingers M-49
20-2. Paper Exit Sensor M-50

21. MULTI BYPASS TABLE M-51

21-1. Paper Take-Up Mechanism M-52
21-2. Paper Separating Mechanism M-53

22. COOLING FAN M-54

23. OPTICAL SECTION COOLING FAN M-55

CONTENTS

24. SEMI-AUTOMATIC DOCUMENT HANDLER (SDH) M-56
24-1. Document Take-Up Mechanism M-56
24-2. Document Separating Mechanism M-56
24-3. Document Transport/Exit Mechanism M-57
24-4. SDH Mode M-58
25. MEMORY BACKUP M-59

GENERAL

1 SPECIFICATIONS

EP1030/EP1030F, EP1031/EP1031F Specifications

TYPE : Desk Top Copier with Stationary Platen

PHOTOCONDUCTOR : Organic Photoconductor

COPYING SYSTEM : Electrostatic Dry Powdered Image Transfer to Plain Paper

PAPER FEEDING SYSTEM : 2-Way Feeding ·Universal Tray (250 sheets)
·Multi Bypass Table (30 sheets)*
*(EP1031/EP1031F only)

EXPOSURE SYSTEM : Slit exposure

DEVELOPING SYSTEM : New Micro-Toning System

CHARGING SYSTEM : Comb Electrode DC Negative Charger with Scorotron Grid

IMAGE TRANSFER SYSTEM : Visible Image Transfer by means of a Single-Wire DC Negative Charger

PAPER SEPARATING SYSTEM : Natural separation from the small-diameter PC Drum because of the inherent strength in paper, plus DC bias

FUSING SYSTEM : Roller packed with heat insulator

PAPER CHARGE NEUTRALIZATION : Charge Neutralizing Brush

ORIGINAL SIZE : Inch Areas: 8-1/2" × 14" (Legal)
Metric Areas: 210 × 297 mm (A4)

COPY PAPER

			Universal Tray (automatic take-up)	Multi Bypass Tray (30 sheets)
Copy Media	Plain paper (60 to 90 g/m^2)		○	○
	OHP transparencies		×	○
	Thick paper (up to 110 g/m^2)		×	○
	Postcards		×	○
Copy Paper Size	Max. (width × length)	Inch Areas	8-1/2" × 14"L	8-1/2" × 14"L
		Metric Areas	210 × 297 mm	210 × 297 mm
	Min. (width × length)	Inch Areas	5-1/2" × 8-1/2"L	4" × 5-3/4" mm
		Metric Areas	148 × 210 mm	98 × 140 mm

○: Acceptable ×: Unacceptable

MULTIPLE COPIES : Up to 99 copies (in SDH mode)

WARMING-UP TIME

115V	9.9 sec.
120V	9.1 sec.
127V	7.5 sec.
220V	10.9 sec.
230V	9.9 sec.
240V	9.1 sec.

FIRST COPY SPEED

Inch Areas	6.4 sec. or less (8-1/2" × 11"L)
Metric Areas	6.5 sec. or less (A4L)

CONTINUOUS COPY SPEED (copies/min.)

Zoom ratio × 1.00, paper fed from Universal Tray

<Normal Mode>

Size		Area
A4L	13	Metric
A5L	13	
Legal L	13	Inch
Letter L	13	
Invoice L	13	

<SDH Mode>

Size		Area
A4L	13	Metric
A5L	13	
Legal L	12	Inch
Letter L	13	
Invoice L	13	

ZOOM RATIOS

<EP1031/EP1031F>

		Inch Areas	Metric Areas
Fixed Ratios	Full Size	×1.00	
	Reductions	×0.78	×0.81
		×0.64	×0.70
	Enlargements	×1.54	×1.41
		×1.29	×1.15
Variable Ratios	×0.64 to ×1.56	(in ×0.01 increments)	

<EP1030/EP1030F> : Full size (× 1.00) only

LENS : Through Lens (F = 7.5, f = 165 mm)

EXPOSURE LAMP : Halogen Frost Tube Lamp

FUSING TEMPERATURE : 200°C/190°C

POWER/CURRENT CONSUMPTION (Copier only)

	115V	120V	127V	220V	230V	240V
Exposure Lamp (Rating)	80V 200W	80V 200W	80V 200W	160V 200W	160V 200W	160V 200W
Fusing Heater (Rating)	115V 850W	115V 850W	115V 850W	230V 850W	230V 850W	230V 850W
Max. power consumption	1040W	1120W	1220W	990W	1060W	1130W
In standby	290W	320W	360W	280W	300W	330W
Max. current consumption	9.3A	9.5A	9.9A	4.6A	4.7A	4.8A

POWER REQUIREMENTS : 115 to 127V, 60Hz
220 to 240V, 50/60Hz

ENVIRONMENTAL REQUIREMENTS

Temperature	10 to 35°C (50 to 95°F) (Temperature Gradient 10°C/h or less)
Humidity	15 to 85%RH (Humidity Gradient 20%RH/h or less)
Ambient Illuminance	300 lux or less
Inclination	1° or less off horizontal

Copier Dimensions (mm)

	Width	Depth	Height*
EP1031	558	451	281
EP1031F	558	456	357

	Width	Depth	Height*
EP1030	529	451	281
EP1030F	529	456	358

*Including SDH (For a copier not equipped with an SDH, up to the document surface level)

COPIER WEIGHT (excluding Copy Tray, starter, toner, and copy paper)

WITH SDH : 25 kg

WITHOUT SDH : 22 kg

ACCESSORIES : Operator's Manual, Setting-up Instructions, Exit Tray

SDH Specifications

NAME : Semi-Automatic Document Handler (SDH)

TYPE : Take-Up = Straight take-up from the top of the stack of documents
Transport = Roller transport
Ejection = Roller transport and U-turn ejection

INSTALLATION : Mounted on top of copier

TYPE OF DOCUMENT : Plain paper (50 to 110 g/m^2)

DETECTABLE DOCUMENT SIZE : A5L to 8-1/2" × 14"

TRAY CAPACITY : Document Feeding Tray : 50 sheets (A4, 80 g/m^2 or less)
30 sheets (A4, 80 g/m^2 or more)
Document Exit Tray : 50 sheets (A4, 80 g/m^2 or less)

ALIGNMENT : Centrally aligned

DOCUMENT PLACEMENT MODE : Face down

POWER REQUIREMENTS : DC24V (supplied from copier)

DOCUMENTS WHICH CANNOT BE USED : The following types of documents, if used in the SDH, are very likely to cause trouble.

Type of Document	Possible Trouble
Documents stapled or clipped together	Take-up failure, damaged document, defective drive train due to jammed staples or clips.
Plastic transparencies	Take-up failure due to static electricity
Documents glued together	Take-up failure, damaged document
Documents folded, torn, or wrinkled	Damaged document, documents misfed due to being fed askew
Documents severely curled	Documents misfed due to being dog-eared or fed askew
Coated paper	Documents misfed due to being fed askew

DOCUMENTS FOR WHICH FEEDING CANNOT BE GUARANTEED : The following types of documents, if used in the SDH, may or may not cause trouble.

Type of Document	Possible Trouble
Paper to which Scotch tape has been applied	Take-up failure, skew
Documents pasted with cut paper	Torn pasted paper
Slightly curled documents	Dog-eared pages, ejection failure
Heat-sensitive paper for fax machines	Crease, ejection failure
Coated documents	Take-up failure
Translucent paper	Take-up failure, transport failure
Paper just fed out of copier	Take-up failure, transport failure
Paper weighing less than 50 g/m^2	Take-up failure, transport failure
Damp, untensile paper	Take-up failure, transport failure
Paper with an extremely rough surface (letterhead, etc.)	Take-up failure, transport failure
Pencil-written documents	Take-up failure, transport failure
Two-fold, Z-fold documents	Transport failure, folded leading edge
Documents of a nonstandard size with a width of 139.7 mm to 216 mm	Transport failure, distorted image.

2 PRECAUTIONS FOR INSTALLATION

■ Installation Site

To ensure safety and utmost performance of the copier, the copier should NOT be used in a place:

- Where it will be subject to extremely high or low temperature or humidity.
- Which is exposed to direct sunlight.
- Which is in the direct air stream of an air conditioner, heater or ventilator.
- Which puts the operator in the direct stream of exhaust from the copier.
- Which has poor ventilation.
- Where ammonia gas might be generated.
- Which does not have a stable, level floor.
- Where it will be subject to sudden fluctuations in either temperature or humidity. If a cold room is quickly heated, condensation forms inside the copier, resulting in blank spots in the copy.
- Which is near any kind of heating device.
- Where it may be splashed with water.
- Which is dirty or where it will receive undue vibration.
- Which is near volatile flammables or curtains.

■ Power Source

Use an outlet with a capacity of 115/120/127V, 13.2A or more, or 200/220/240V, 8.1A or more.

- If any other electrical equipment is sourced from the same power outlet, make sure that the capacity of the outlet is not exceeded.
- Use a power source with little voltage fluctuation.
- Never connect by means of a multiple socket any other appliances or machines to the outlet being used for the copier.
- Make the following checks at frequent intervals:
  - Is the power plug abnormally hot?
  - Are there any cracks or scrapes in the cord?
  - Has the power plug been inserted fully into the outlet?
  - Does something, including the copier itself, ride on the power cord?
- Ensure that the copier does not ride on the power cord or communications cable of other electrical equipment, and that it does not become wedged into or underneath the mechanism.

■ Grounding

To prevent receiving electrical shocks in the case of electrical leakage, always ground the copier.

- Connect the grounding wire to:
  - The ground terminal of the outlet.
  - A grounding contact which complies with the local electrical standards.
- Never connect the grounding wire to a gas pipe, the grounding wire for a telephone, or a water pipe.

3 PRECAUTIONS FOR USE

To ensure that the copier is used in an optimum condition, observe the following precautions.

- Never place a heavy object on the copier or subject the copier to shocks.
- Insert the power plug all the way into the outlet.
- Do not attempt to remove any panel or cover which is secured while the copier is making copies.
- Do not turn OFF the Power Switch while the copier is making copies.
- Provide good ventilation when making a large number of copies continuously.
- Never use flammable sprays near the copier.
- If the copier becomes inordinately hot or produces abnormal noise, turn it OFF and unplug it.
- Do not turn ON the Power Switch at the same time when you plug the power cord into the outlet.
- When unplugging the power cord, do not pull on the cord; hold the plug and pull it out.
- Do not bring any magnetized object near the copier.
- Do not place a vase or vessel containing water on the copier.
- Be sure to turn OFF the Power Switch at the end of the workday or upon power failure.
- Use care not to drop paper clips, staples, or other small pieces of metal into the copier.

■ Operating Environment

The operating environmental requirements of the copier are as follows.

- Temperature: 10°C to 30°C with a fluctuation of 10°C per hour
- Humidity: 15% to 85% RH with a fluctuation of 10% RH per hour

■ Power Requirements

The power source voltage requirements are as follows.

- Voltage Fluctuation: AC115/120/127/220/230/240V
  ±10% (Copying performance assured)
  –15% (Paper feeding performance assured)
  (*AC127V : $^{+6}_{-10}$ %)
- Frequency Fluctuation: 50/60 Hz ±0.3%

4 HANDLING OF THE CONSUMABLES

Before using any consumables, always read the label on its container carefully.

- Use the right toner. The applicable copier model name is indicated on the Toner Bottle.
- Paper is apt to be easily damaged by dampness. To prevent absorption of moisture, store paper, which has been removed from its wrapper but not loaded into the drawer, in a sealed plastic bag in a cool, dark place.
- Keep consumables out of the reach of children.
- Do not touch the PC Drum with bare hands.
- Store the paper, toner, and other consumables in a place free from direct sunlight and away from any heating apparatus.
- The same sized paper is of two kinds, short grain and long grain. Short grain paper should only be fed through the copier crosswise, long grain paper should only be fed lengthwise.
- If your hands become soiled with toner, wash them with soap and water immediately.
- Do not throw away any used consumables (PC Drum, starter, toner, etc.). They are to be collected.

NOTE

Do not burn, bury in the ground, or throw into the water any consumables (PC Drum, starter, toner, etc.).

5 SYSTEM CONFIGURATION

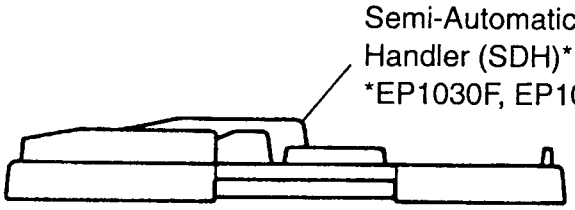

1159M040AA

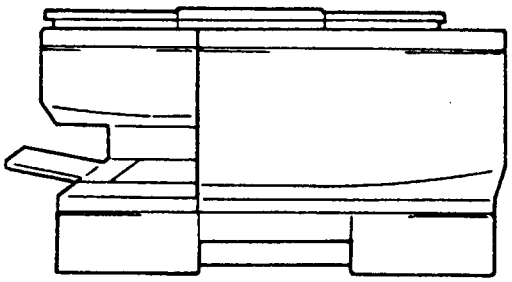

1159M041AA

MECHANICAL/ ELECTRICAL

1 CROSS-SECTIONAL VIEW

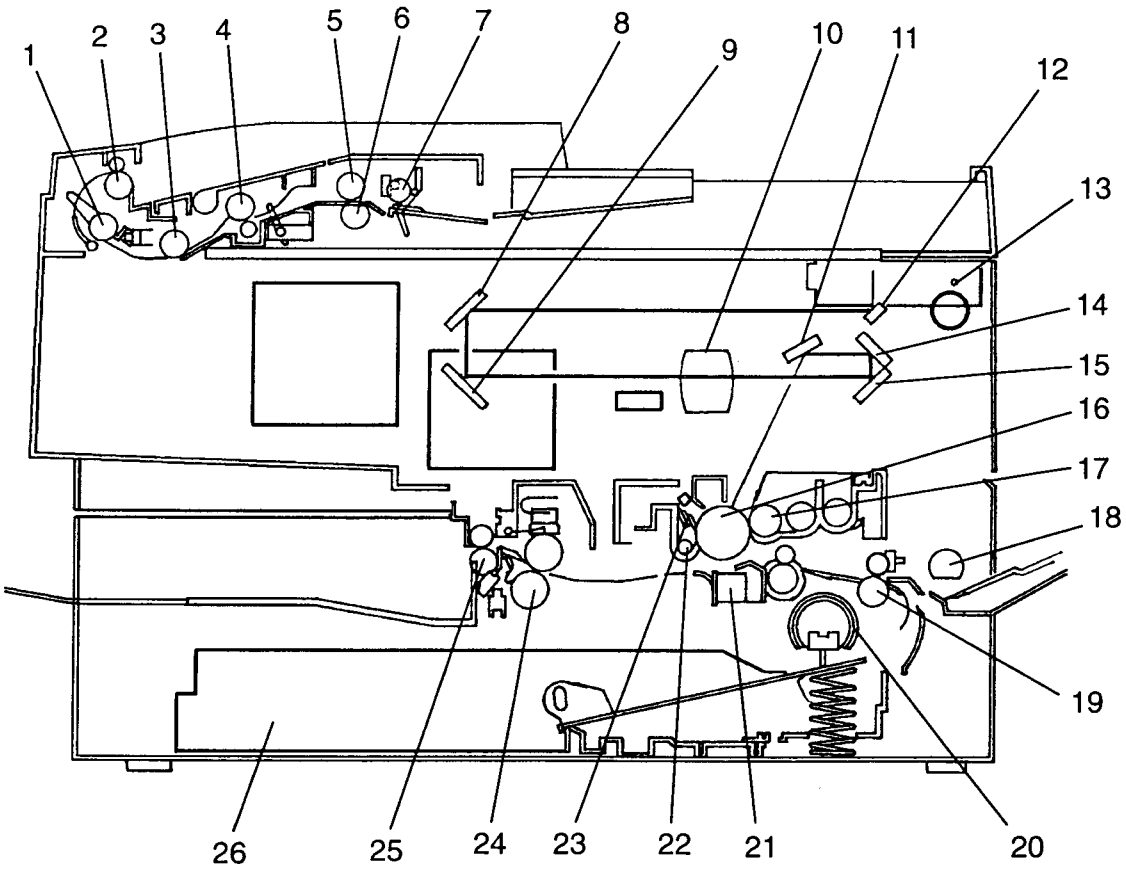

1159M058AA

SDH: EP1030F, EP1031F only

1. Document Transport Roller 2
2. Document Exit Roller
3. Document Transport Roller 1
4. Document Registration Roller
5. Document Feed Roll
6. Document Separator Roll
7. Document Take-Up Roll

Copier

8. 2nd Mirror
9. 3rd Mirror
10. Lens
11. 6th Mirror
12. 1st Mirror
13. Exposure Lamp
14. 5th Mirror
15. 4th Mirror
16. PC Drum
17. Magnet Roller
18. Multi Bypass Take-Up Roll
19. Transport Roller
20. Paper Take-Up Roll
21. Image Transfer/Paper Separator Coronas
22. Main Erase Lamp
23. Cleaning Blade
24. Fusing Roller
25. Exit Roller
26. Universal Tray

2 COPY PROCESS

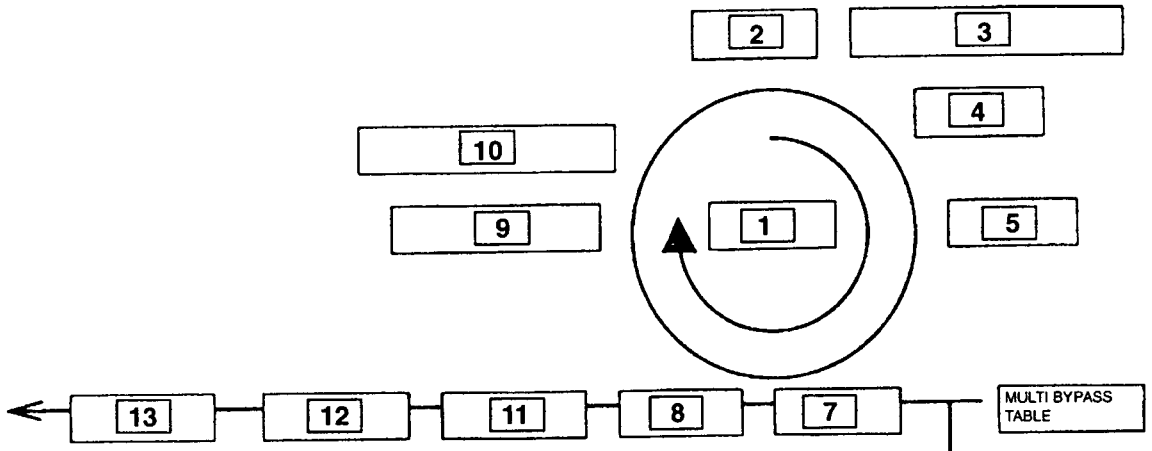

1. PC DRUM
2. DRUM CHARGING
3. IMAGE ERASE
4. EXPOSURE
5. DEVELOPING
6. PAPER FEEDING
7. IMAGE TRANSFER
8. PAPER SEPARATION
9. CLEANING
10. MAIN ERASE
11. TRANSPORT
12. FUSING
13. PAPER EXIT

1. PC Drum

The PC Drum is an aluminum cylinder coated with a photosensitive semiconductor. It is used as the medium on which a visible developed image of the original is formed.

(For more details, see p. M-9.)

2. Drum Charging

The PC Drum Charge Corona Unit is equipped with a Comb Electrode and a Scorotron Grid to deposit a uniform negative charge across the entire surface of the PC Drum.

(For more details, see p. M-21.)

3. Image Erase

Any areas of charge which are not to be developed are neutralized by lighting up LEDs.

(For more details, see p. M-22.)

4. Exposure

Light from the Exposure Lamp reflected off the original is guided to the surface of the PC Drum and reduces the level of the negative charges, thereby forming an electrostatic latent image.

(For more details, see p. M-24.)

5. Developing

Toner positively charged in the Developer Mixing Chamber is attracted onto the electrostatic latent image changing it to a visible, developed image. A DC negative bias voltage is applied to the Sleeve/Magnet Roller to prevent toner from being attracted onto those areas of the PC Drum which correspond to the background areas of the original.

(For more details, see p. M-12.)

6. Paper Feeding

Paper is fed either automatically from the Drawer, or manually via the Multi Bypass Table or Manual Bypass Table. Each Drawer has fingers that function to separate the top sheet of paper from the rest at take-up.

(For more details, see p. M-34.)

7. Image Transfer

The single-wire Image Transfer Corona Unit applies a DC negative corona emission to the underside of the paper, thereby attracting toner onto the surface of the paper.

(For more details, see p. M-33.)

8. Paper Separation

The paper, thanks to its inherent strength, is naturally separated from the small-diameter PC Drum. This is combined with the application of a positive DC bias with a comb electrode. The two methods ensure that the paper is definitely separated from the surface of the PC Drum.

(For more details, see p. M-33.)

9. Cleaning

Residual toner on the surface of the PC Drum is scraped off by the Cleaning Blade.

(For more details, see p. M-18.)

10. Main Erase Lamp

The Main Erase Lamp applies a positive DC charge to neutralize any surface potential remaining on the surface of the PC Drum after cleaning.

(For more details, see p. M-32.)

11. Transport

The paper is fed to the Fusing Unit by the Guide Plate.

(For more details, see p. M-45.)

12. Fusing

The developed image is permanently fused to the paper by a combination of heat and pressure applied by the Upper and Lower Fusing Rollers.

(For more details, see p. M-46.)

13. Paper Exit

After the fusing process, the paper is fed out by the Paper Exit Roller onto the Copy Tray.

(For more details, see p. M-49.)

1159SBM0300A

3 DRIVE SYSTEM

Main Drive Motor M1 of this copier is used to drive the Imaging Unit, paper take-up and transport mechanisms, and Fusing Unit. Its drive is transmitted via gear trains as follows.

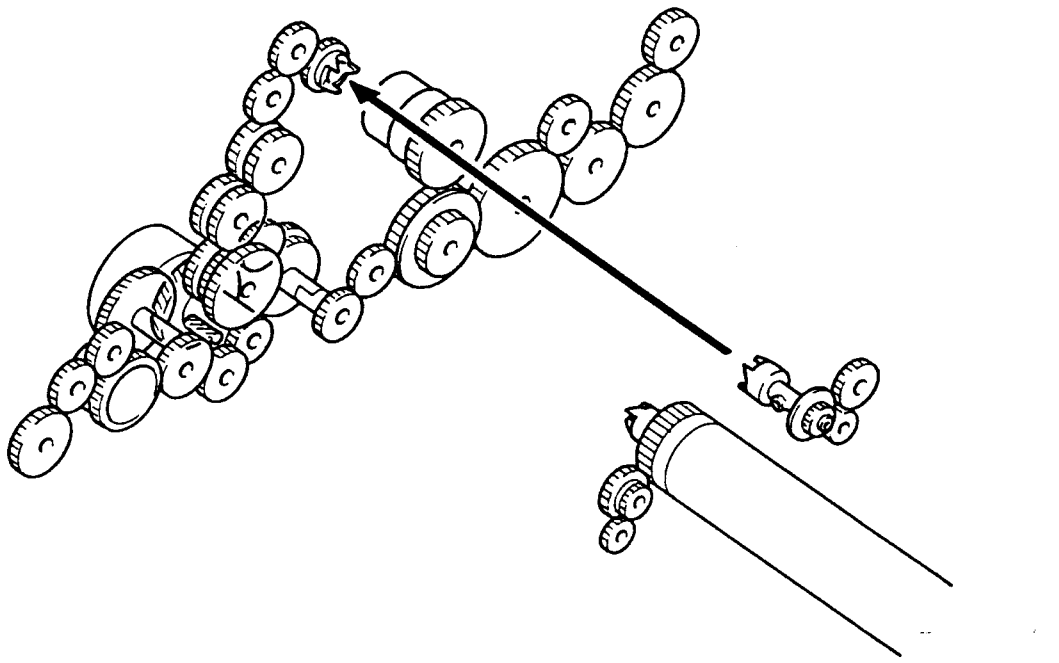

1159M042AA

4 OPERATIONAL SEQUENCE

*Figures given in ☐ in the following flowchart represent timer values in seconds.

A Power Switch S1 is turned ON.

S1 ON

- → DC24V (PU1)
- → DC5V
- → Control panel
- → Ozone Fan Motor M3 turns at full speed.
  - Approx. 500ms → Ozone Fan Motor M3 turns at half speed.
  - Approx. 1s → Heat Roller
- → Scanner Home Position Sensor PC11
  *Scanner Drive Motor M4 is energized to move it to the home position.
  - → Lens Home Position Sensor PC12
    *Lens Drive Motor M5 is energized to move it to the home position.
- → Starter set sequence and ATDC automatic adjustment
  (After the warming-up cycle is completed)
  *Only when the Imaging Unit is new.
  Fuse is blown when the starter setup sequence is normally terminated.

B Fusing Unit temperature is detected at 200°C.

Fusing Thermistor TH1 detects 200°C.

- → Heat Rollers
  *Fusing temperature control starts.

C | **The Start Key is pressed.**

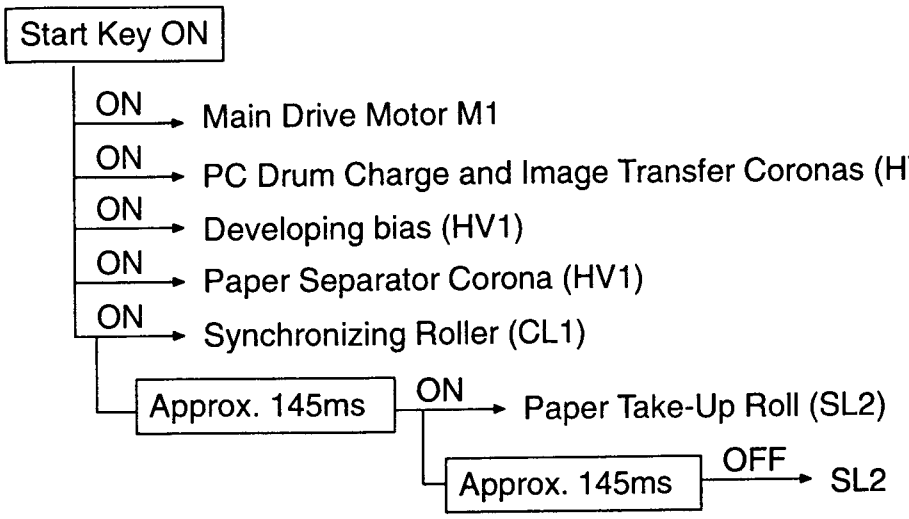

D | **Paper is taken up.**

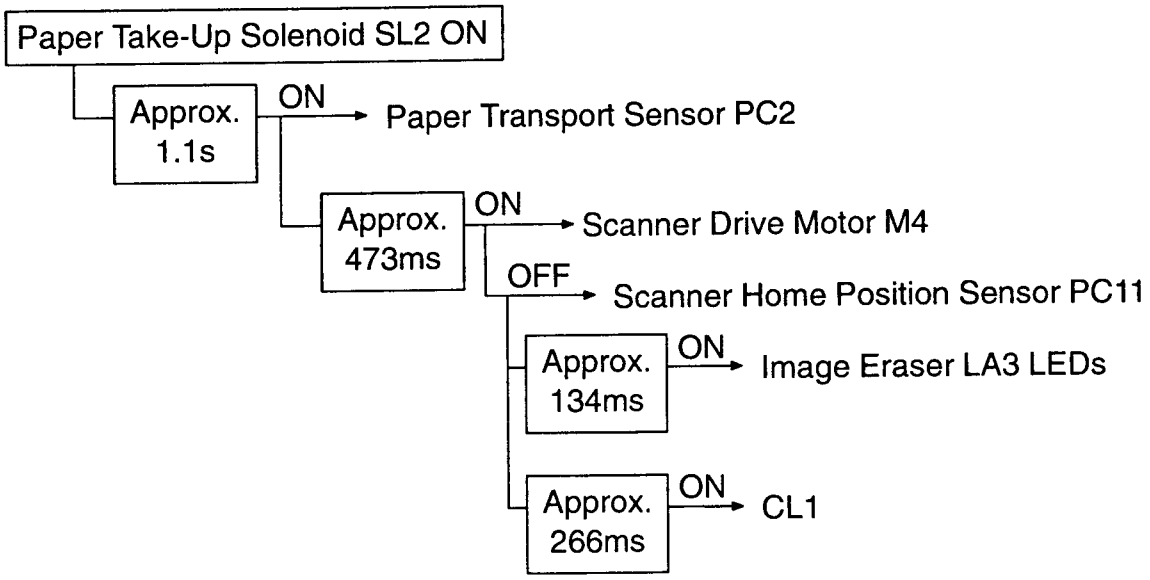

E **The Scanner completes the scan motion.**

Scanner starts the return motor

- Approx. 0.9 — ON → Scanner Home Position Sensor PC11
- OFF → Exposure Lamp LA1

F **The last paper moves past Paper Transport Sensor PC2.**

Paper Transport Sensor PC2 OFF

- Approx. — OFF → PC Drum Charge and Image Transfer Coronas (HV1)
- Approx. 2s — ON → Paper Exit Sensor PC3

G **Paper moves past Paper Exit Sensor PC3.**

Paper Exit Sensor PC3

- Approx. 350ms — OFF → Main Drive Motor M1
- OFF → PC Drum Charge

5 PC DRUM

The photoconductive drum used in this copier is the organic photoconductor (OPC) type. The drum is made up of two distinct, semiconductive materials on an aluminum alloy base. The outer of the two layers is called the Charge Transport Layer (CTL), while the inner layer is called the Charge Generating Layer (CGL).

The PC Drum has its grounding point inside at its rear end. When the Imaging Unit is installed in the copier, the shaft on which the PC Drum Drive Coupling Gear is mounted contacts this grounding point.

Handling Precautions

This photoconductor exhibits greatest light fatigue after being exposed to light over an extended period of time. It must therefore be protected from light by a clean, soft cloth whenever the Imaging Unit has been removed from the copier. Further, use utmost care when handling the PC Drum to prevent it from being contaminated.

PC Drum Cross-Sectional View

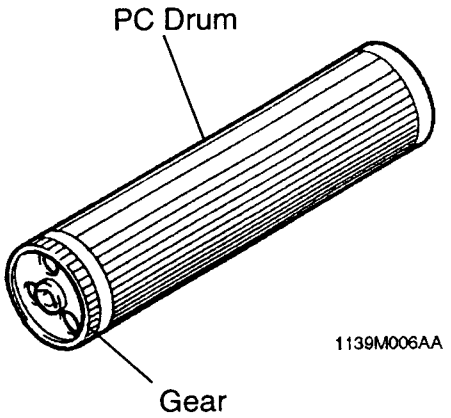

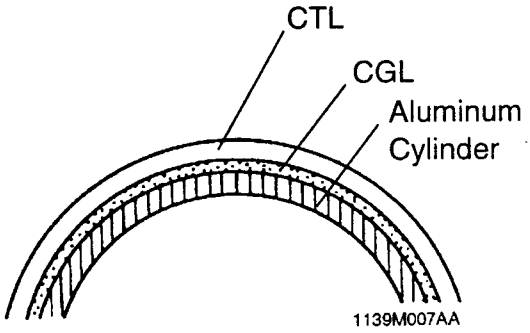

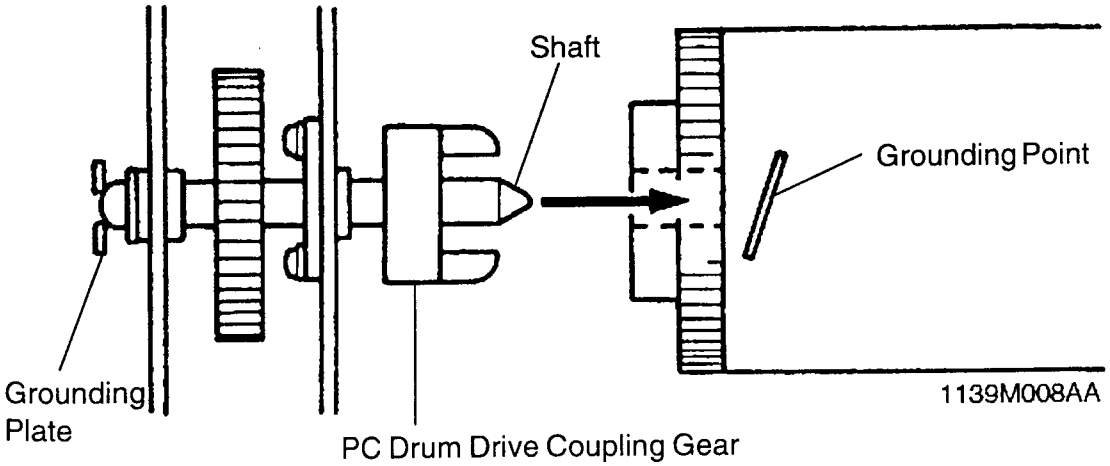

6 IMAGING UNIT

This copier is equipped with an Imaging Unit, or IU, which integrates a PC Drum, PC Drum Charge Corona, Developing Unit, Cleaning Unit, and Toner Recycling mechanism into one assembly. The Unit also includes the Upper Synchronizing Roller which facilitates clearing of a paper misfeed.

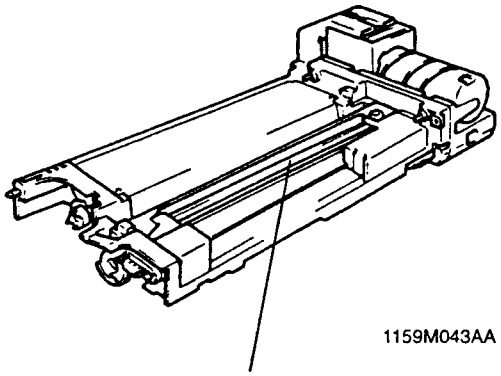

1159M043AA

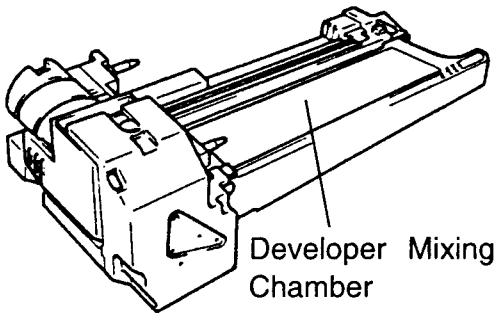

1159M044AA

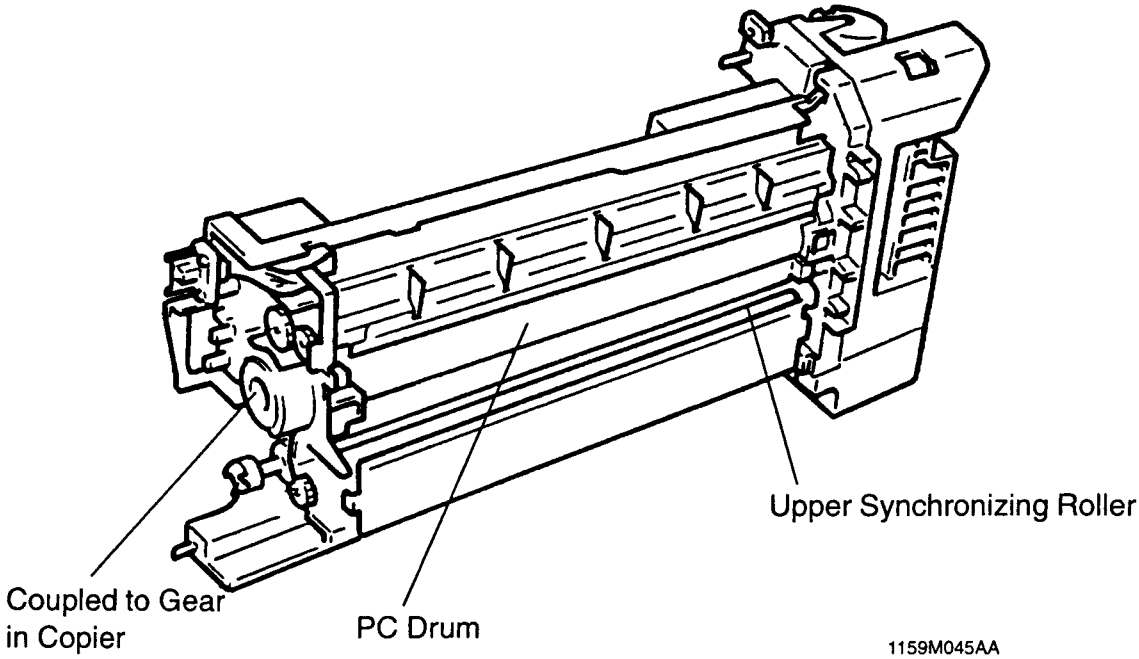

1159M045AA

1159SBM0601A

6-1. Imaging Unit Drive

Drive for the Imaging Unit is transmitted by one of the gears on the Unit. This particular gear is in mesh with the Imaging Unit Drive Gear in the copier.

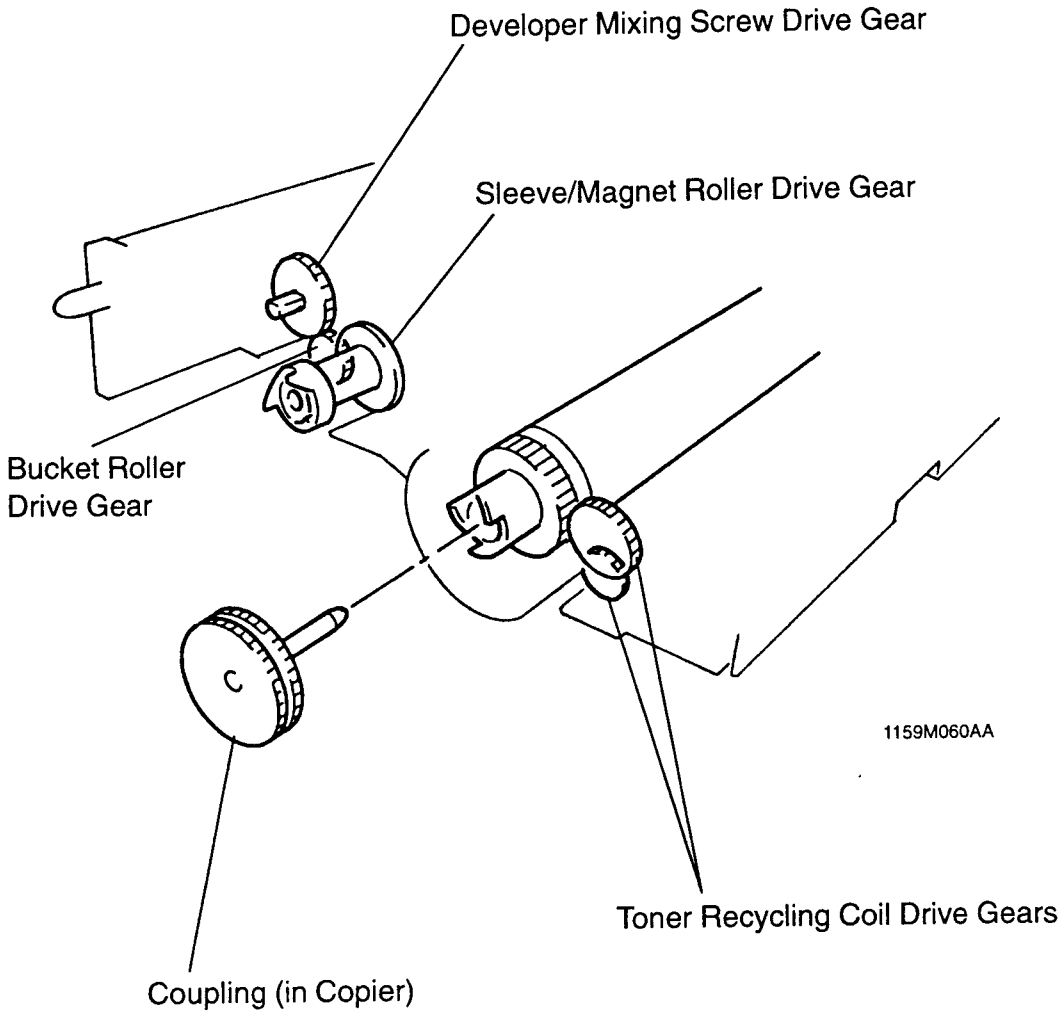

1159SBM0602A

6-2. Toner Recycling

The copier is provided with a toner recycling mechanism. The toner, which has been scraped off the surface of the PC Drum by the Cleaning Blade and collected in the Cleaning Unit, is conveyed by the two Toner Recycling Coils to the Toner Supply Port and, from there, it is returned back to the Developer Mixing Chamber of the Developing Unit.

One of the gears of the Toner Recycling mechanism (1) receives drive through a gear at the rear end of the PC Drum.

The gear on Toner Recycling Coil 1 receives drive through a gear at the rear end of the PC Drum. While, the gear on Toner Recycling Coil 2 receives drive through a train of three gears mounted on the mechanism from the Developing Unit to Hopper.

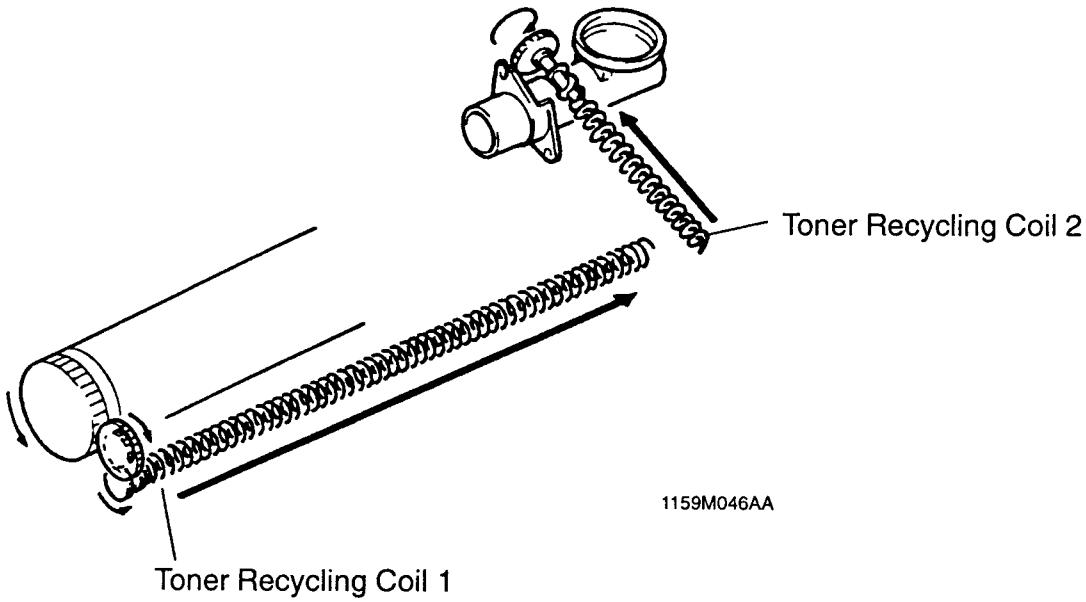

1159SBM0603A

6-3. IU Fuse F1

The Imaging Unit is provided with a fuse called IU Fuse F1. When a new Imaging Unit is installed in the copier and the Power Switch turned ON, an IU Set signal is output causing the copier to start the starter setup sequence and ATDC Sensor automatic adjustment.

When the starter setup sequence is completed normally, an IU Fuse Blow signal is output to blow F1. Once F1 is blown, the IU Set signals are no longer output. This means that the starter setup sequence and ATDC Sensor automatic adjustment will not be carried out when the Power Switch is thereafter turned ON.

	Control Signal	When Fuse is not Blown	When Fuse is Blown	WIRING DIAGRAM
F1	PWB-A PJ10A-5	H	L	2-B

7 DEVELOPMENT

The Developing Unit built into the Imaging Unit performs the following functions:

- Mixes the toner and carrier well to ensure that a sufficient amount of toner is positively charged.
- Detects the toner-to-carrier ratio of the developer by means of the ATDC Sensor and replenishes the supply of toner as necessary.
- Detects a toner empty condition by means of the ATDC Sensor.
- Ensures that a proper amount of toner is attracted to the PC Drum by means of its Sleeve/Magnet Roller, Developing Bias, and Doctor Blade.

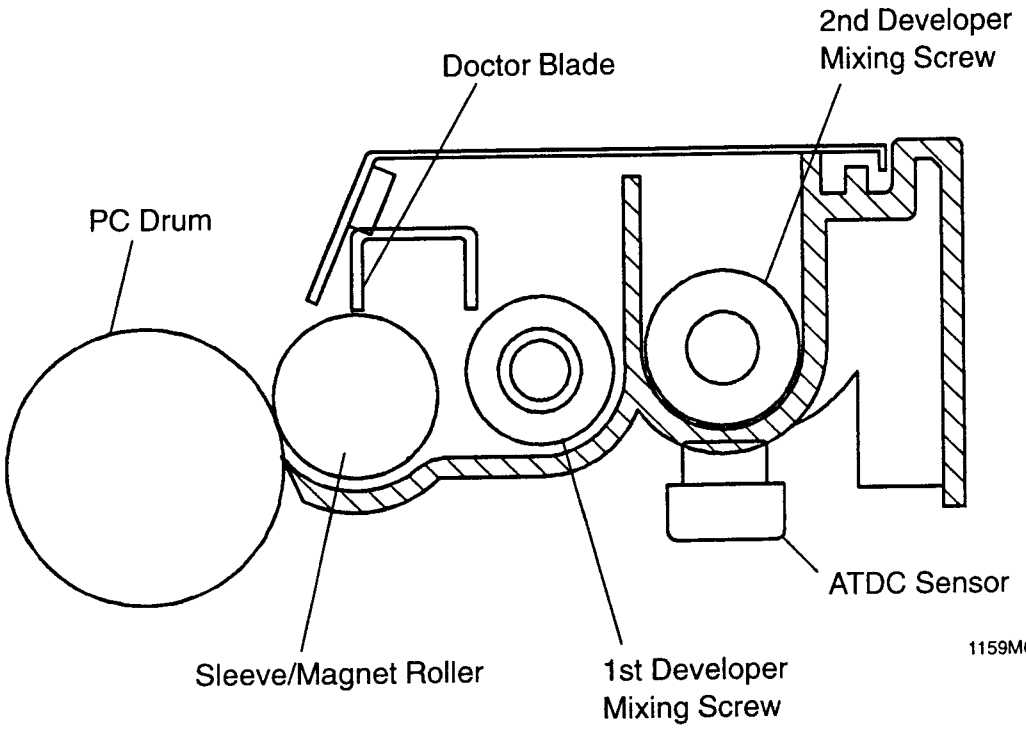

7-1. ATDC Sensor

ATDC Sensor UN3 installed on the underside of the Developer Mixing Chamber detects the varying toner-to-carrier ratio of the developer which flows over it in the Chamber. The copier CPU compares the detected ratio with the ratio set by the ATDC Detection Level Mode (Tech. Rep. Choice SCH-90) to control toner replenishment.

Set T/C (%)	ATDC Output Voltage (V)
4.0	2.65
4.5	2.57
5.0	2.48 (Standard)
5.5	2.40
6.0	2.32
6.5	2.32
7.0	2.15

The Toner Bottle is turned one turn (30 mg) to replenish the supply of toner for each Toner Replenishing signal.
If the toner-to-carrier ratio becomes lower than 2.5%, the copier inhibits the initiation of a new copy cycle (this feature can be enabled or disabled by a Tech. Rep. Choice function). When a ratio of 2.5% or more is recovered as a result of Auxiliary Toner Replenishing, the copier permits the initiation of a new copy cycle.

If the Front Door is swung open and closed with a T/C ratio of less than 4%, the copier initiates an Auxiliary Toner Replenishing sequence. (It stops the sequence as soon as a T/C ratio of 5% is reached.)

ATDC Sensor Automatic Adjustment

An automatic adjustment of the ATDC Sensor is made in the F8 Test Mode operation and when a new Imaging Unit is installed in the copier.

***When a New Imaging Unit is Installed in the Copier:**
Following the execution of the starter setup mode upon power-up, the copier CPU reads the output value of the ATDC Sensor and establishes the reading as the reference value.

***When F8 is Run after Starter Has Been Changed:**
Following the execution of the starter setup mode upon pressing of the Start Key, the copier CPU reads the output value of the ATDC Sensor and establishes the reading as the reference value.

NOTE: If an F8 operation is run at a time when the starter has not been changed, it can result in a wrong T/C reference value being set by the copier. Avoid casual use of F8.

If the setting value has been cleared because the RAM Board was replaced, set the value valid before the replacement for the ATDC Sensor adjustment data of the Adjust mode using the 10up/1up key.

Toner Empty Detection

The copier has no toner empty detecting sensor and, instead, the ATDC Sensor performs that function. The toner-empty condition is canceled after detection under any of the following conditions:

- The set T/C ratio has been recovered.
- After the Front Door has been swung open and closed.

(For details, see "9-2. Toner Replenishing Control" on p.M-20.)

	Control Signal	Set T/C	Standard Output Voltage	WIRING DIAGRAM
UN3	PWB-A PJ10A-2	4.0%	2.65	2-A
		4.5%	2.57	
		5.0%	2.48	
		5.5%	2.40	
		6.0%	2.32	
		6.5%	2.32	
		7.0%	2.15	

7-2. Magnet Roller

The Magnet Roller of the Sleeve/Magnet Roller of this copier has the following magnetic characteristics.

The Sleeve Roller, onto which developer is attracted by the magnetic fields of force set up by the poles of the Magnet Roller, turns to convey the developer toward the point of development. It also means that developer fresh from the Developer Mixing Chamber is always brought to the point of development.

As we noted earlier, the Imaging Unit integrates the Developing Unit with the PC Drum into one body. Because of that, it is impossible to move the Developing Unit against the PC Drum, thereby providing a certain distance between the PC Drum and Sleeve/Magnet Roller. The Magnet Roller has therefore been made movable: the Bushing is pressed by compression springs thereby pressing the Positioning Collars on both ends of the Magnet Roller against the PC Drum. This ensures a given distance between the PC Drum and the Sleeve/Magnet Roller.

Magnetic Pole Positioning

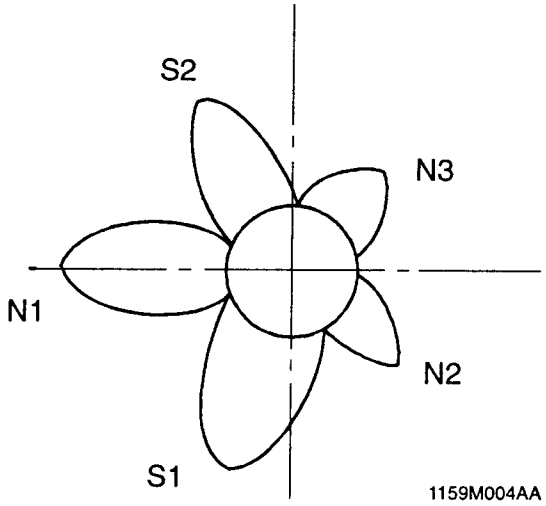

1159M004AA

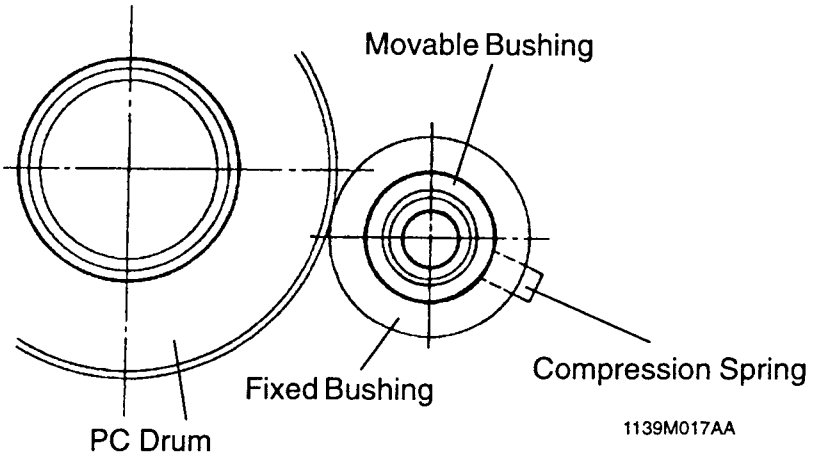

1139M017AA

1159SBM0703A

7-3. Developing Bias

A negative voltage (Vb = Developing Bias voltage) is applied to the Sleeve Roller to prevent a foggy background on the copy. The amount of toner attracted onto the surface of the PC Drum depends on how much lower the PC Drum surface potential (Vi) is than Vb (i.e., the potential difference).

- When the potential difference is large, a greater amount of toner is attracted.
- When the potential difference is small, a smaller amount of toner is attracted.

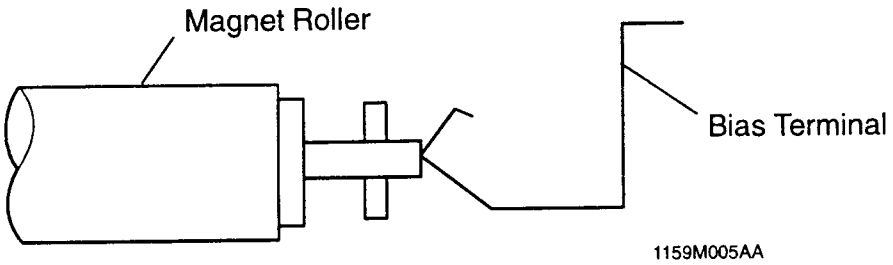

1159M005AA

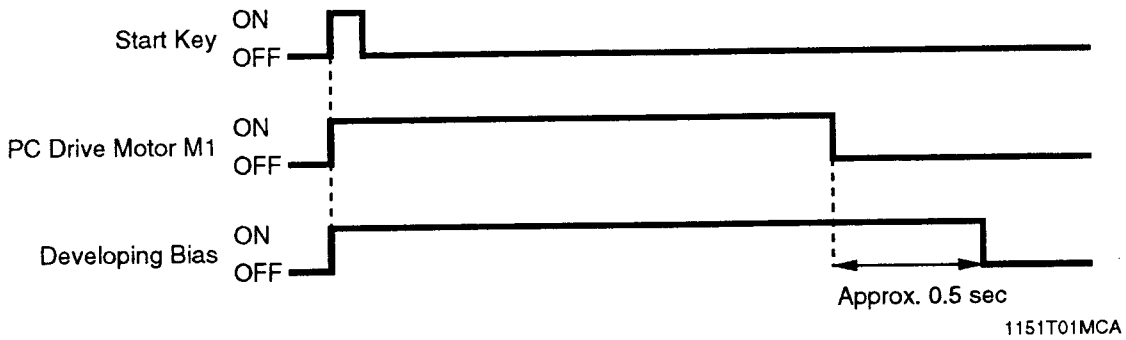

1151T01MCA

	Control Signal	ON	OFF	WIRING DIAGRAM
Developing Bias	PWB-A PJ8A-4	L	H	12-F

1159SBM0704A

7-4. Doctor Blade

The Doctor Blade installed over the Sleeve/Magnet Roller regulates the height of the developer brush on the surface of the Sleeve Roller. The Blade is perpendicular to the direction of movement of the Magnet Roller to minimize variations in the distance between the Doctor Blade and Magnet Roller as the Magnet Roller moves.

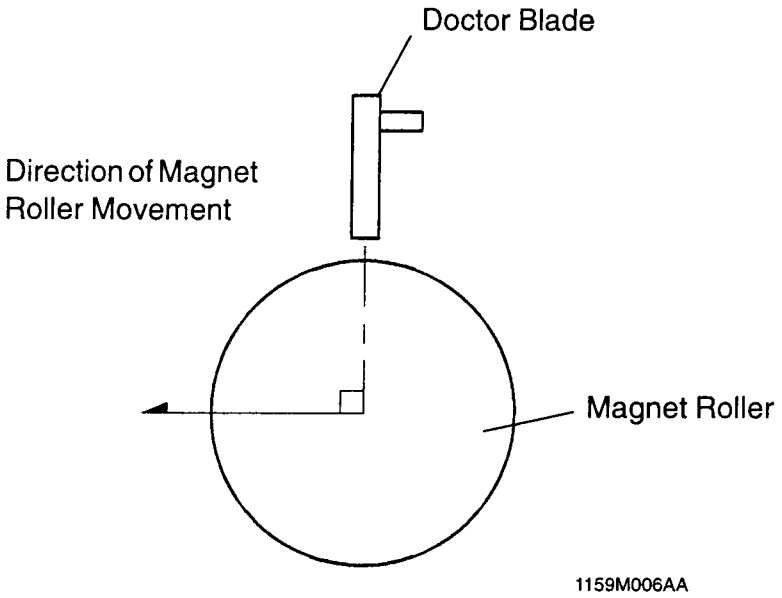

1159M006AA

1159SBM0705A

7-5. Magnet Roller Lower Filter

There is a seal installed under the Magnet Roller to prevent insufficiently charged toner from spilling onto the mechanisms inside the copier and toner particles from flying out.

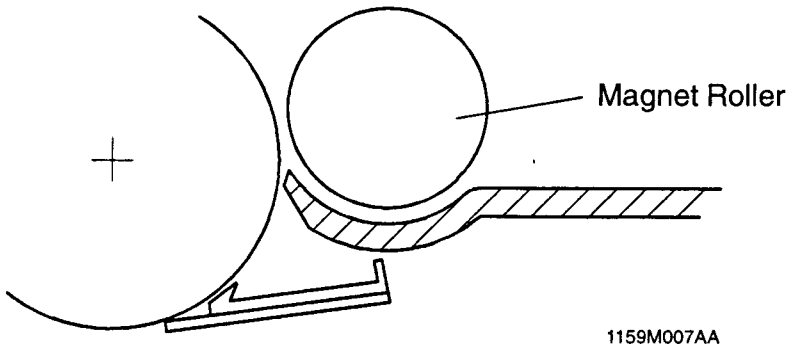

1159M007AA

1159SBM0800A

8 CLEANING UNIT

The Cleaning Blade is pressed tightly against the surface of the PC Drum and scrapes off any toner remaining on the surface after image transfer and paper separation have been completed.

The Cleaning Blade is moved back and forth to prevent the PC Drum from deteriorating and the Cleaning Blade from warping away from the surface of the PC Drum.

There is a Toner Antispill Mylar affixed to the Imaging Unit. It prevents toner scraped off the surface of the PC Drum from falling down onto the surface of the copy paper or the paper path.

In addition, a Side Seal is affixed to both ends of the Imaging Unit on both sides of the Cleaning Blade. They prevent toner from spilling from both ends of the Cleaning Blade.

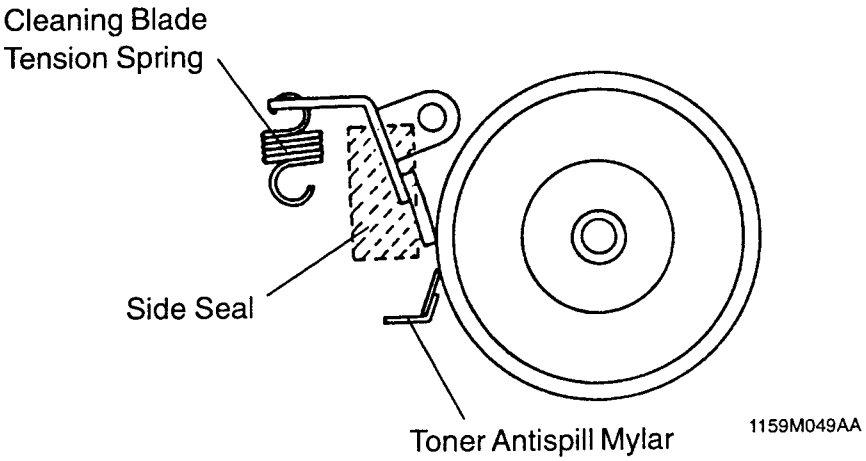

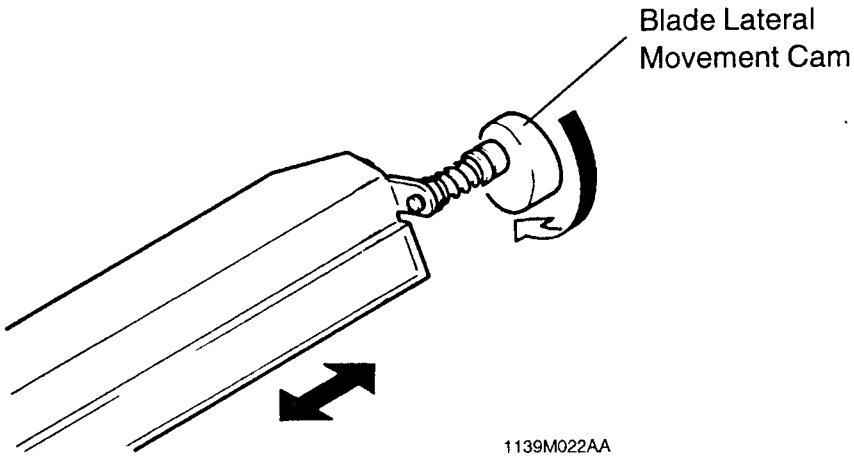

1159SBM0900A

9 TONER HOPPER

The Toner Hopper is integrated into the Imaging Unit. To replace an empty Toner Bottle, the user first needs to swing the Toner Bottle Holder out 20° to the front. The Holder pivots about the Toner Supply Port as it is swung out or in, which effectively prevents toner from spilling when the Holder is swung out or in.

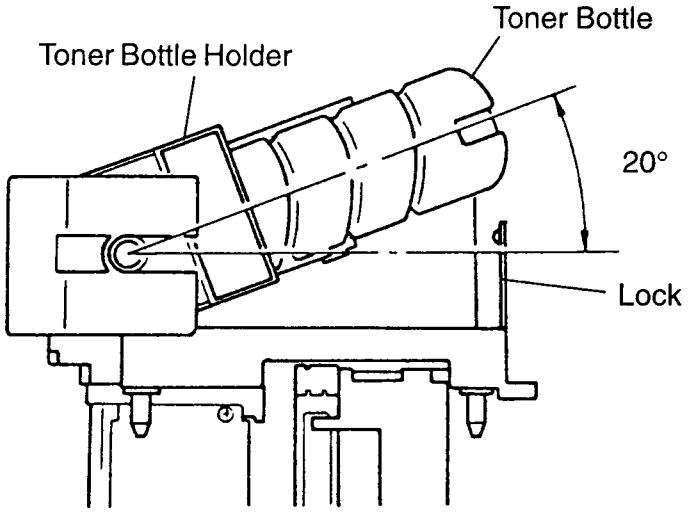

1159M039AA

1159SBM0901A

9-1. Toner Replenishing

Drive from Main Drive Motor M1 is transmitted via the Magnet Roller to the Bottle Drive Gear in the gear box. There is a holder installed on the Bottle Drive Gear, coupling the Toner Bottle to the Bottle Drive Gear. This ensures that the Bottle Drive Gear turns with the Toner Bottle. When Toner Replenishing Solenoid SL1, fitted to the gear box, is energized, it turns the Toner Bottle one complete turn. The spiral groove cut in the Toner Bottle effectively prevents toner from remaining in the bottle.

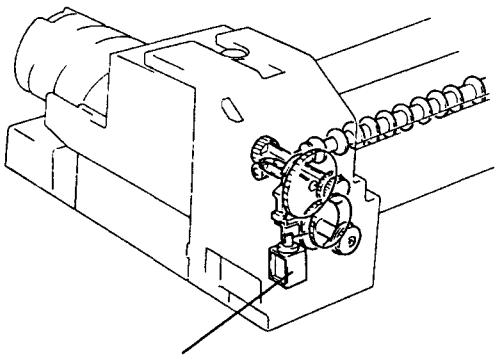

1159M057AA

1159SBM0902A

9-2. Toner Replenishing Control

When Power is Turned ON

- If the toner-to-carrier ratio (T/C) data stored in memory when power was last turned OFF is "less than –1%" of the set level, the copier is set into the auxiliary toner replenishing sequence after it has completed warming up.

During a Copy Cycle

- The copier detects T/C at the start of exposure for each copy cycle and, if the reading is lower than the set level, it replenishes the supply of the amount of toner equivalent to one complete turn of the Toner Bottle (1st-stage replenishing).

↓

- When the copier goes through 1st-stage replenishing four times, it replenishes the supply of the amount of toner equivalent to three complete turns of the Toner Bottle (2nd-stage replenishing).

↓

- After carrying out 2nd-stage replenishing five times, the copier takes a reading of the T/C ratio. If the reading is "less than –1%" of the set level, the copier is set into the auxiliary toner replenishing sequence. (Auxiliary toner replenishing = Two turns of Toner bottle x max. 10 times)

↓

- If the T/C reading is "less than –1%" of the set level after the auxiliary toner replenishing sequence, it results in a toner-empty condition.

10 DRUM CHARGING

The PC Drum Charge Corona has a Scorotron grid to deposit a negative DC charge evenly across the surface of the PC Drum. The grid voltage (VG) applied to the grid mesh is –590V ±20V.

The Corona Unit has a Comb Electrode which minimizes the amount of ozone produced. The conventional wire type corona unit produces a large amount of ozone due to corona discharge in radial directions. The comb electrode type, on the other hand, discharges only toward the Grid Mesh, meaning a reduced amount of ozone is produced.

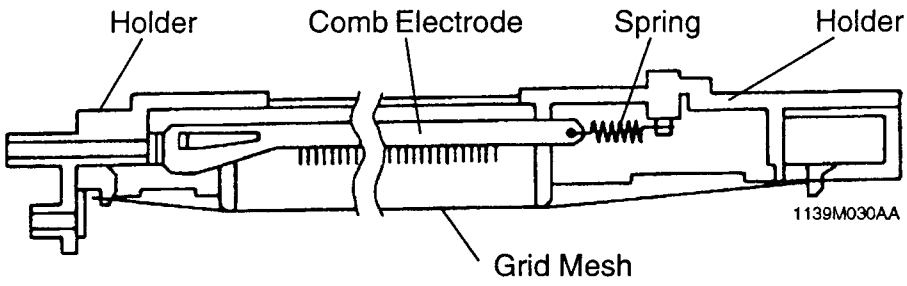

<Normal Mode>

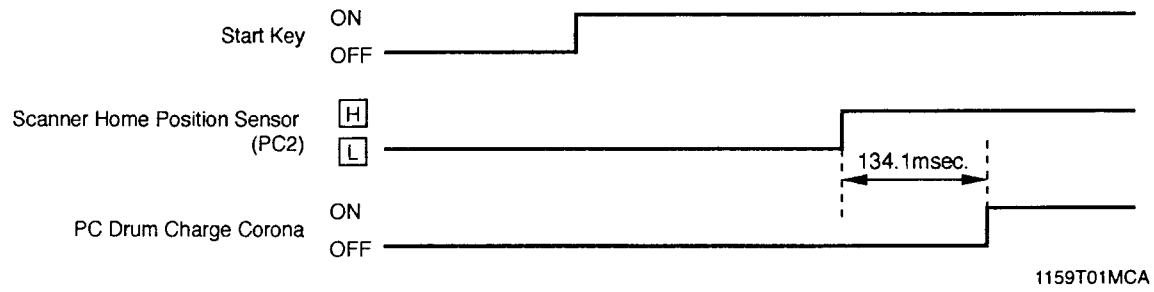

<SDH Mode>

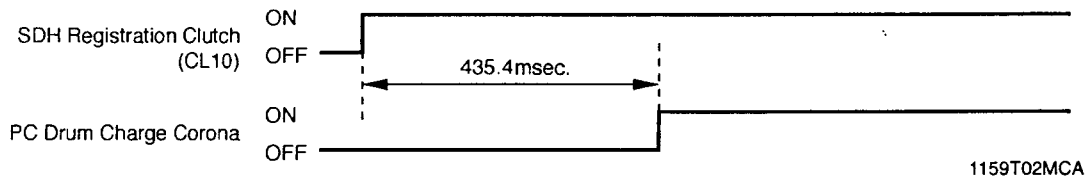

	Control Signal	ON	OFF	WIRING DIAGRAM
PC Drum Charge Corona	PWB-A PJ8A-4	L	H	12-F

	Control Signal	WIRING DIAGRAM
Grid Voltage (VG)	PWB-A PJ8A-3	12-F

11 IMAGE ERASE LAMP (EP1031/EP1031F only)

To prevent a black band from occurring across both the leading and trailing edges, and along the front and rear edges, of the electrostatic latent image, LEDs of Image Erase Lamp LA3 are turned ON before development takes place, thereby reducing to a minimum the unnecessary potential on the surface of the PC Drum.
Because of the light path involved, this copier has this edge erasing cycle between drum charging and exposure.

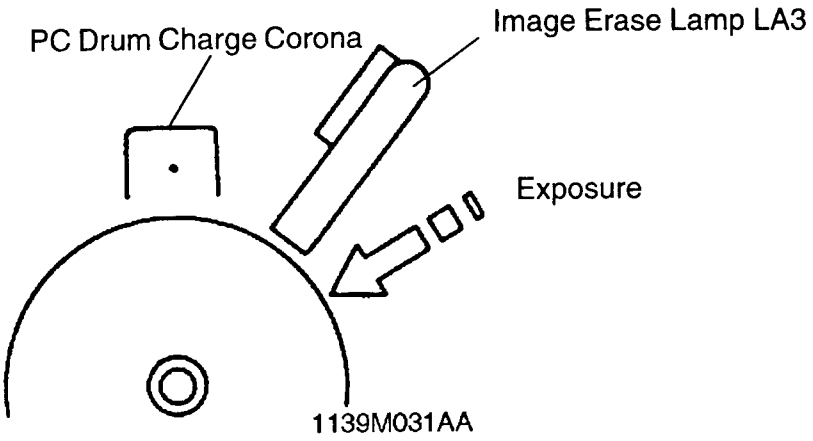

● Image Eraser LEDs are turned ON and OFF according to the zoom ratio.

Zoom Ratio	□	□	□		□	□	□
×0.95 ~	OFF	OFF	OFF		OFF	OFF	OFF
×0.87 ~ ×0.94	ON	OFF	OFF		OFF	OFF	ON
×0.75 ~ ×0.86	ON	ON	OFF		OFF	ON	ON
×0.64 ~ ×0.74	ON	ON	ON		ON	ON	ON

	Control Signal	ON	OFF	WIRING DIAGRAM
LA3	PWB-A PJ18A-1 ~ 4	L	H	2-C

12 OPTICAL SECTION

As the Scanner is moved by Scanner Motor M5, the light from Exposure Lamp LA1 is reflected off the original and guided through the Six Mirrors onto the surface of the PC Drum to form the electrostatic latent image.

The image is enlarged or reduced as necessary by moving the Lens and mirrors (EP1031/EP1031F only).

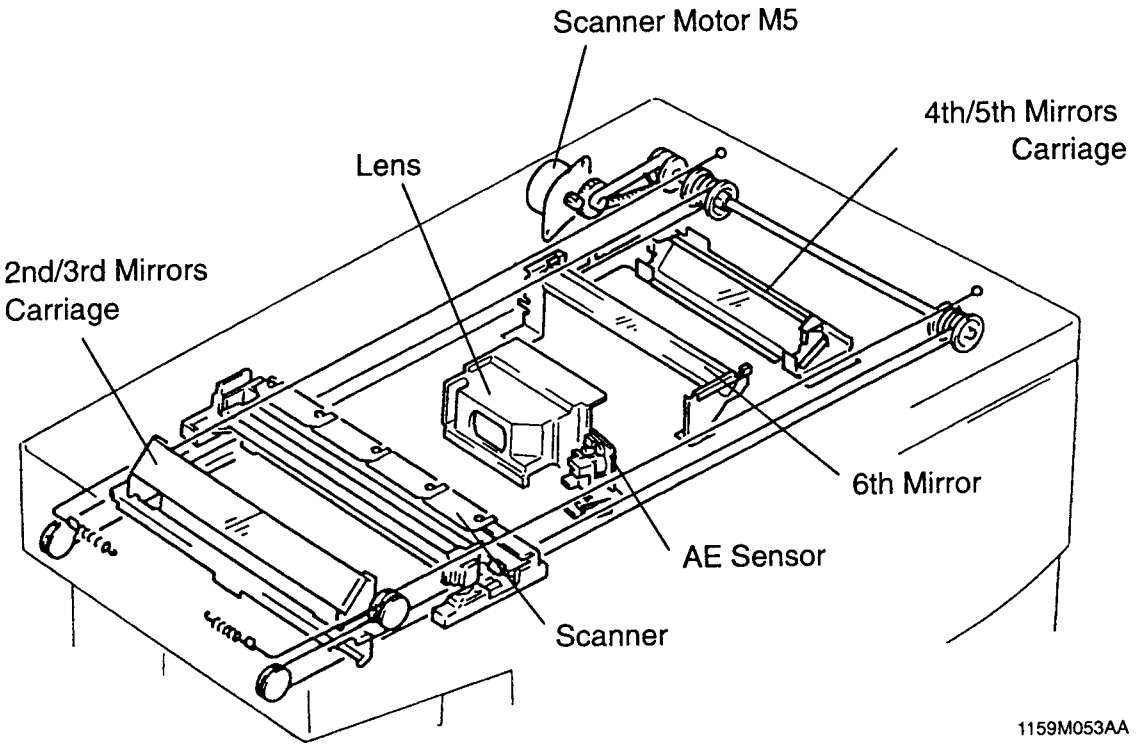

12-1. Exposure Lamp LA1

An AC halogen lamp is used as Exposure Lamp LA1.

As the exposure level is adjusted on the control panel, the delay time from the zero-cross signal of the AVR Trigger signal from PWB-A changes to increase or decrease the LA1 voltage, thereby changing the image density.

Manual EXP Setting	9	8	7	6	5	4	3	2	1
Lamp Voltage Difference (V)	–8	–5	–3	–1	Reference	+1	+3	+5	+8

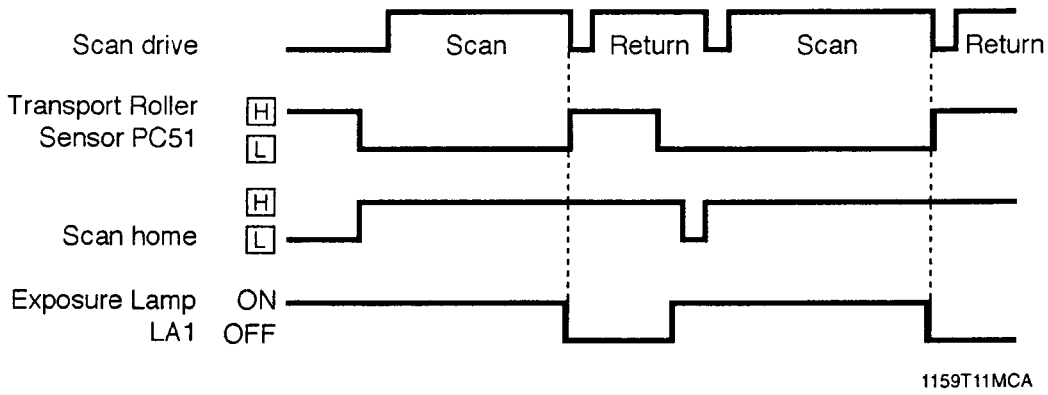

	Control Signal	**ON**	**OFF**	**WIRING DIAGRAM**
AVR Trigger Signal (LA1)	PWB-A PJ7A-5	L	H	7-B

12-2. AE Sensor

In the Auto Exposure Mode, the AE Sensor on AE Sensor Board PWB-H measures the intensity of the light reflected off the original, which results in the black/white ratio of a 210-mm-wide area from the reference position of the original being measured. According to this measurement, the Exposure Lamp voltage is automatically increased or decreased so that copies of consistent quality are produced.

The output from the AE Sensor is applied to PWB-A which, in turn, varies the delay time from the zero-cross signal of the AVR Trigger signal from it to vary accordingly the LA1 voltage.

Original Density (B/W Ratio)	High	Low
Intensity of Reflected Light	Low	High
PWB-H Output	High	Low
AVR Delay	Shorter	Longer
LA1 Voltage	Increased	Decreased

	Control Signal	**ON**	**OFF**	**WIRING DIAGRAM**
PWB-H (AE Sensor)	PWB-A PJ16A-2	L	H	7-C
AVR Trigger Signal (LA1)	PWB-A PJ7A-5	L	H	7-B

1159SBM1203A

12-3. Lamp Reflectors

The Main Reflector ensures that light from Exposure Lamp LA1 exposes all areas of the original. The Auxiliary Reflector functions to reflect light onto the areas that LA1 cannot illuminate when an original that does not lie flat on the Original Glass (such as a book) is being used. This reduces shadows which would otherwise be transferred to the copy.

The Main Reflector is of aluminum, while the Auxiliary Reflector is aluminum to which film has been deposited. In addition, reflectors of the same material as the Main Reflector are installed on both ends of the frame to compensate for the reduced intensity of light around both ends of the Exposure Lamp.

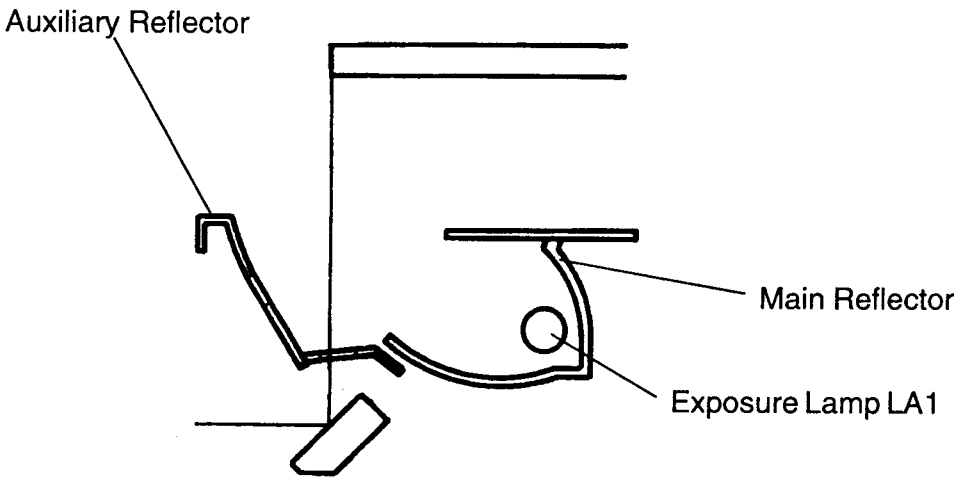

1151M021AA

1151SBM1204A

12-4. Aperture Plates

Four Aperture Plates are moved to the front and rear to ensure even light distribution.

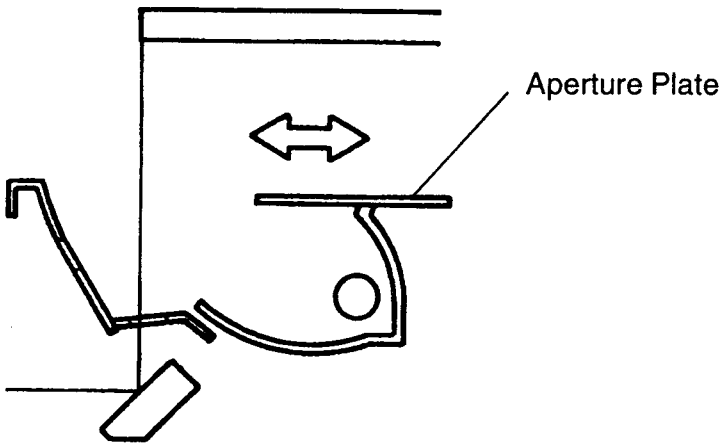

1151M020AA

1159SBM1205A

12-5. Scanner and 2nd/3rd Mirror Carriage Movement

- Scanner Drive Motor M4, a stepping motor, drives the Scanner Drive Cables fitted at the front and rear of the copier to move the Scanner and Mirrors Carriage.
- The speed of the Scanner varies for different zoom ratios (EP1031/EP1031F only).
- Scanner Home Position Sensor PC11 detects the Scanner at its home position. If the Scanner is not at the home position when the copier is turned ON, M4 is energized to move the Scanner to the home position.

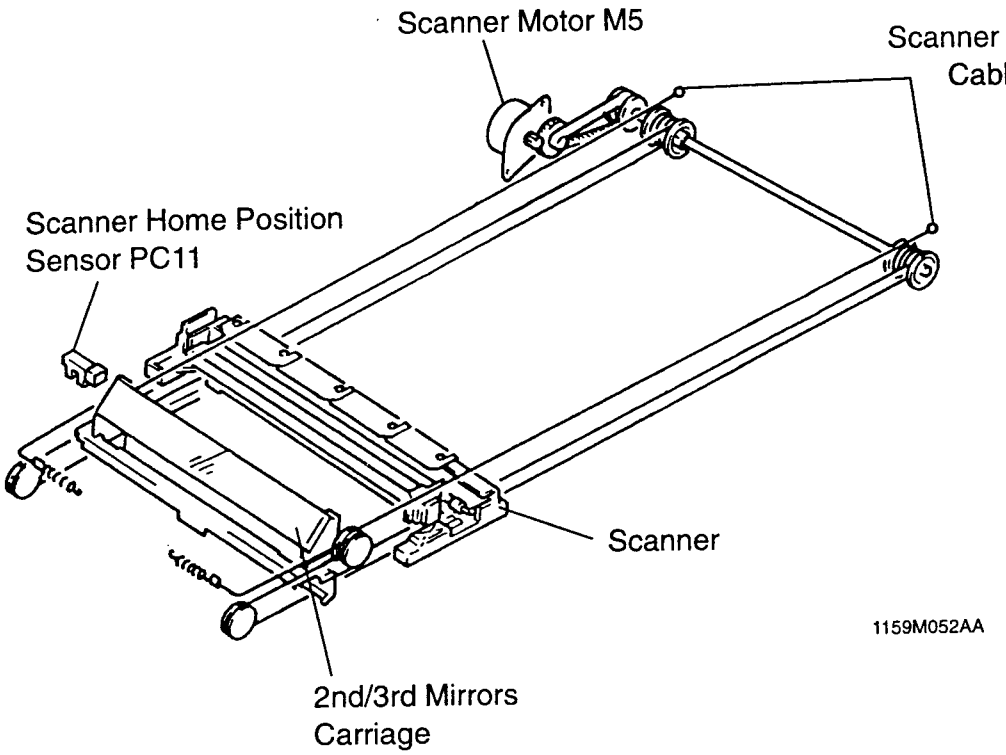

The Scanner starts its scan motion when the Start key is pressed. When the copier is turned ON, it does not know where the Scanner is located and so it moves the Scanner up to the point equivalent to 6 pulses towards the paper exit end from Scanner Home Position Sensor PC11. If the Scanner is located beyond PC11 towards the exit end, the copier moves the Scanner in the scan direction (to the right of PC11) and, when the Scanner has moved for several pulses, the copier brings the Scanner back to the point equivalent to 6 pulses to the left of PC11. When the Start key is pressed, the copier moves the Scanner at a low speed until it blocks PC11. Then, phase-shifted motor drive pulses (1, 2, 4, and 5 of PWB-11A) are applied to M4 to accelerate the Scanner. The speed of the Scanner is changed by varying the width of the pulse applied to the motor (EP1031, EP1031F only).

	Control Signal	Blocked	Unblocked	WIRING DIAGRAM
PC11	PWB-A PJ16A-5	L	H	5-D

SDH Mode
When the Start key is pressed, the copier moves the Scanner up to a point equivalent to 43 pulses to the left (paper exit end) of PC11.

1159SBM1206A

12-6. 4th Mirror Movement (EP1031/EP1031F only)

- The 4th Mirror is moved to the right and left as the eccentric cam located on the bottom of Lens Drive Motor M5 is turned. It is moved to vary the conjugate distance for each zoom ratio selected for use.

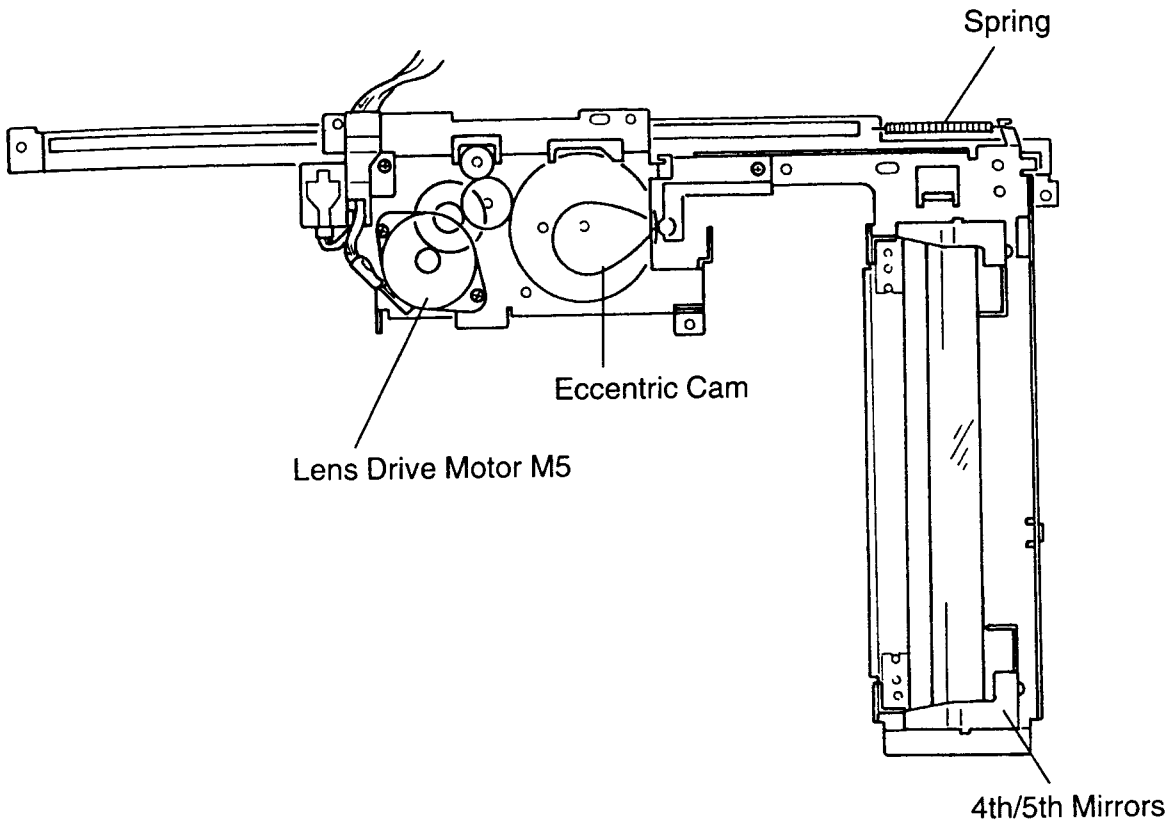

1159M051AA

	Control Signal	Energized	Deenergized	WIRING DIAGRAM
M5	PWB-A PJ16A-2	L	H	7-D

12-7. Lens Movement (EP1031/EP1031F only)

Lens Drive Motor M5, a stepping motor, is energized by the motor drive pulses sent from PWB-A to move the Lens a given distance via a gear train. There is a fixed-type Lens Aperture Cover provided at the rear of the Lens (on the 4th Mirror end). It limits the amount of light striking the surface of the PC Drum.

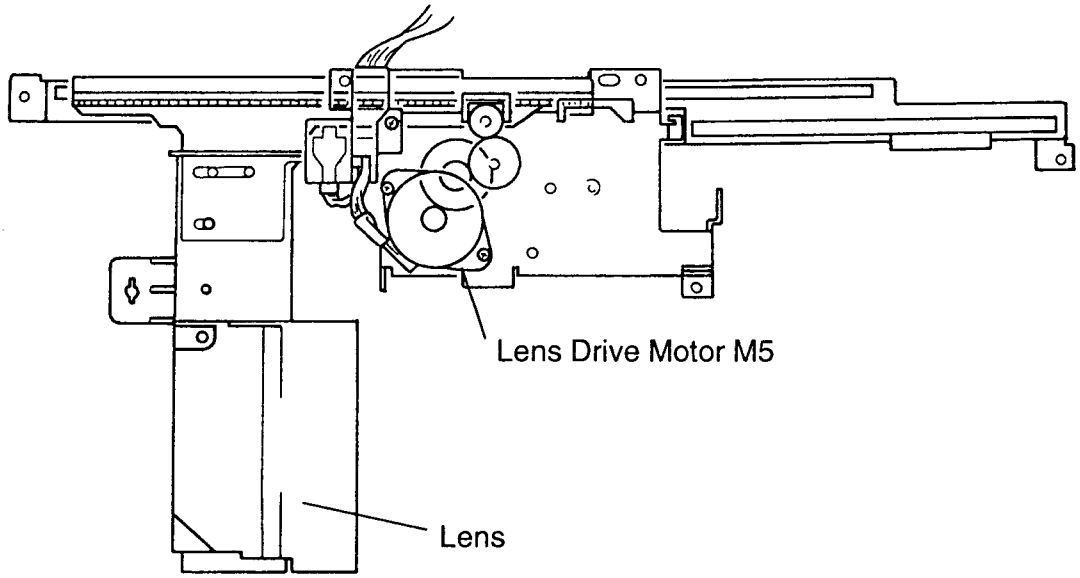

1159M050AA

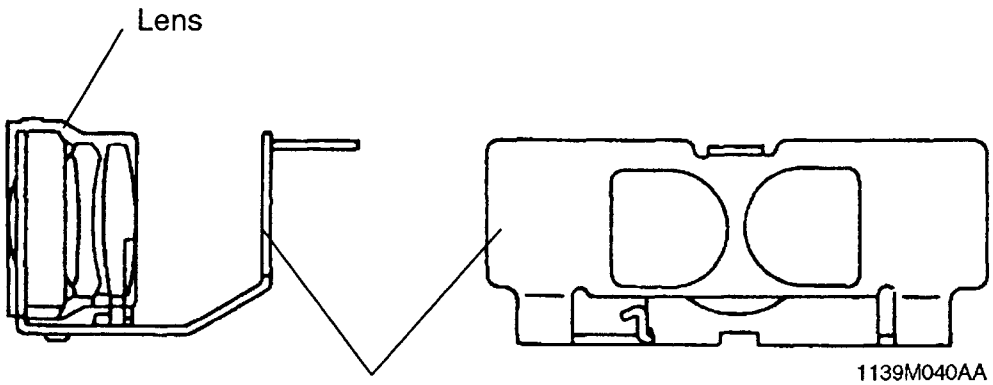

1139M040AA

	Control Signal	Blocked	Unblocked	WIRING DIAGRAM
PC12	PWB-A PJ17A-2	L	H	5-D

13 MAIN ERASE LAMP

Main Erase Lamp LA2 is turned ON to neutralize any surface potential remaining on the surface of the PC Drum after cleaning.

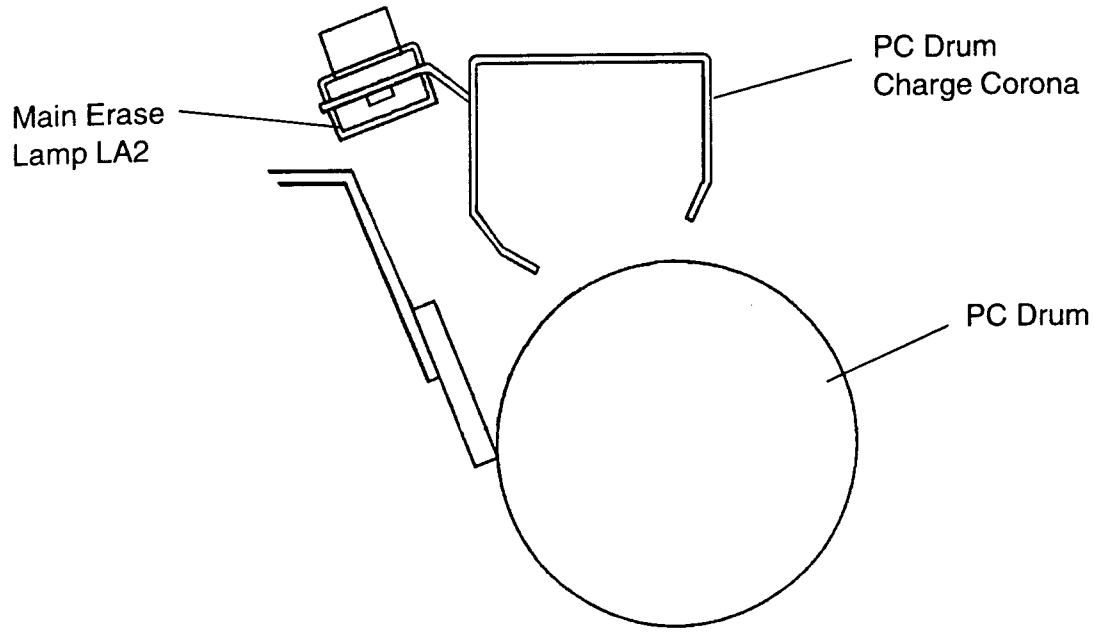

1159M059AA

The Main Erase Lamp is not a single lamp. A total of 40 LEDs are mounted on a board to make up LA2. The LA2 board is fitted with an acrylic cover to protect the LEDs from contamination.

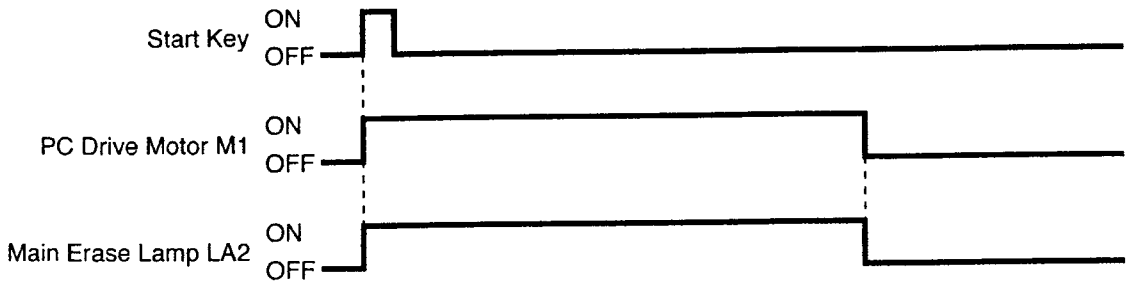

1151T06MCB

	Control Signal	ON	OFF	WIRING DIAGRAM
LA2	PWB-A	H	L	2-B

14 IMAGE TRANSFER AND PAPER SEPARATION

Image Transfer

The Image Transfer Corona applies a DC negative corona emission to the underside of the paper thereby attracting the positively charged toner onto the surface of the paper. The Image Transfer Guide Plate installed before the Image Transfer Corona restricts the entry angle of the paper to the PC Drum and, at the same time, ensures a given distance of the paper from the PC Drum so that the image is properly transferred onto the paper.

Paper Separation

This copier employs a natural paper separation method which owes its paper separating efficiency to the inherent strength in the paper and the small diameter PC Drum. In addition, a charge neutralizing plate is installed that applies a (+) 600V bias to prevent image noise from occurring due to static electricity discharge occurring at the time of paper separation.

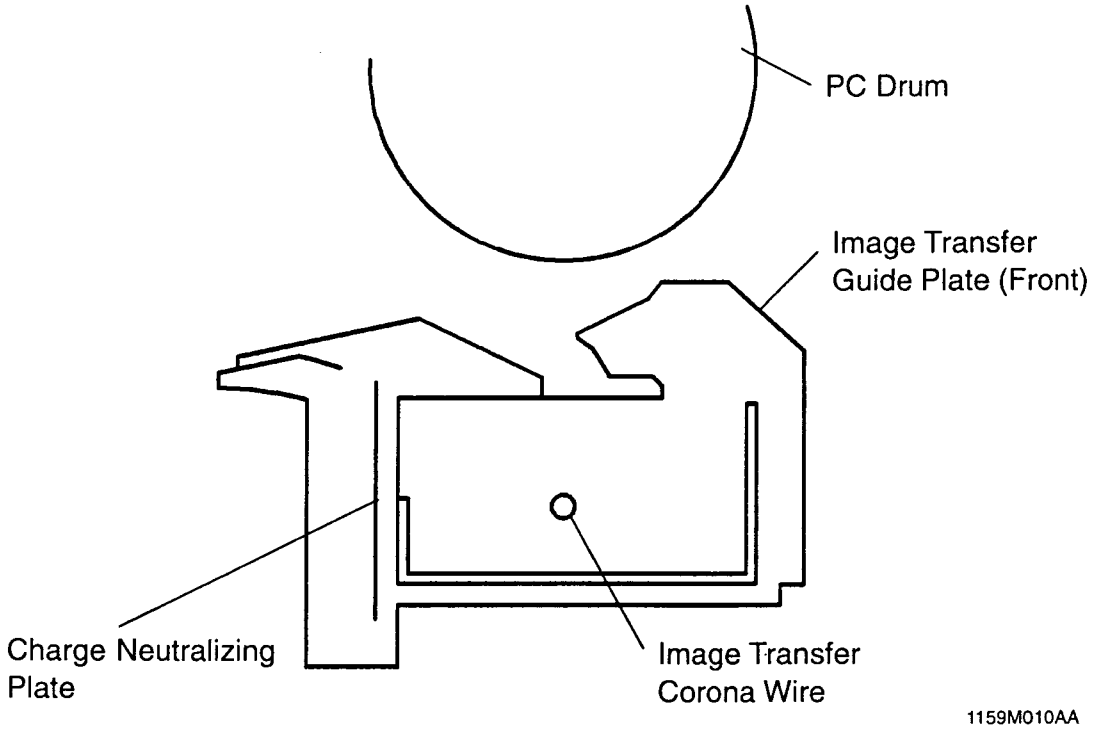

15 PAPER TAKE-UP/FEED SECTION

The copier is equipped with a Universal Tray that is slid out to the front of the copier. It can hold up to 250 sheets of paper.

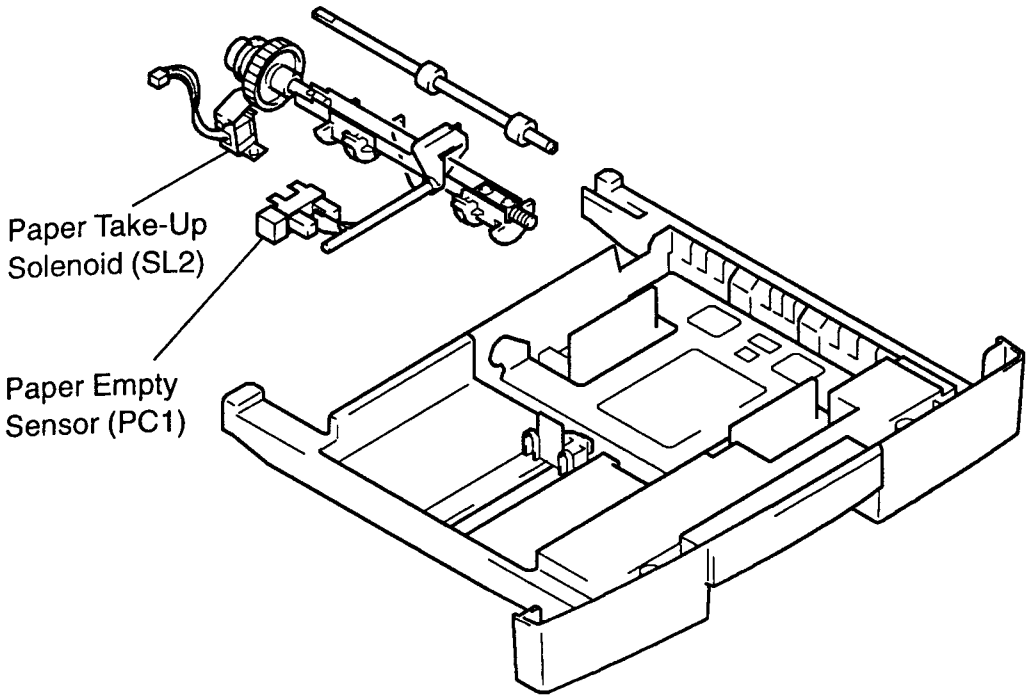

1159M014AA

Paper Sizes That Can be Loaded

<Inch Area>

- 5-1/2" × 8-1/2" ~ 8-1/2" × 14"

<Metric Area>

- A5T ~ A4T

15-1. Edge Guide and Trailing Edge Stop

The Drawer is a universal type allowing the user to slide freely the Edge Guide and Trailing Edge Stop to accommodate paper of different sizes.

The Edge Guide and Trailing Edge Stop can be locked into position by meshing the notches in the Lock Lever with those in the Drawer.

Trailing Edge Stop

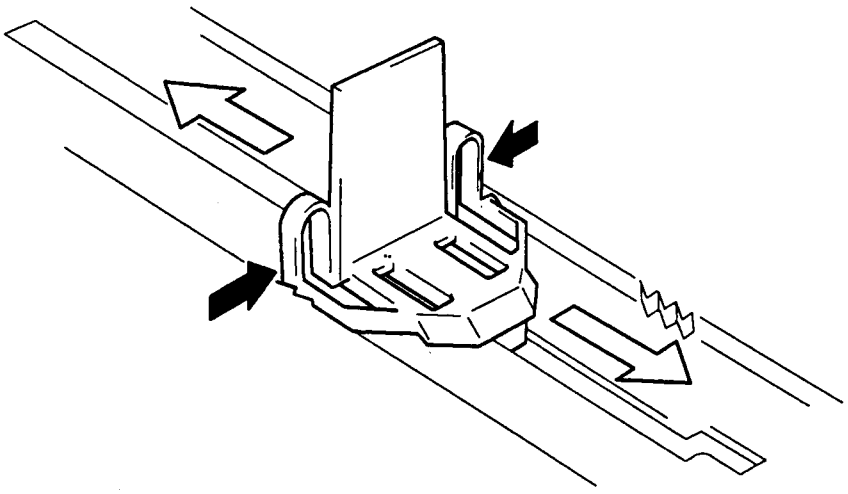

1159M015AA

Edge Guide

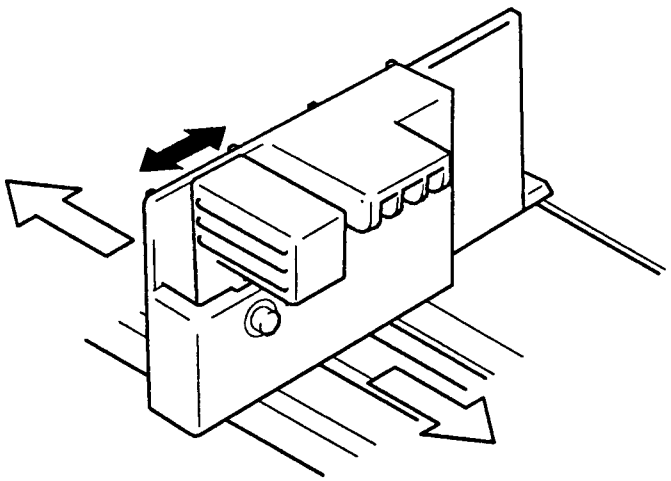

1159M016AA

1159SBM1502A

15-2. Drawer Positioning

The tray is positioned by fitting the slit in its frame into the positioning plate on the paper take-up unit and pressing the side faces on both ends of the tray front cover against the flat surface of the base bracket.
The tabs on both sides at the front of the tray ensure that the tray clicks into position.

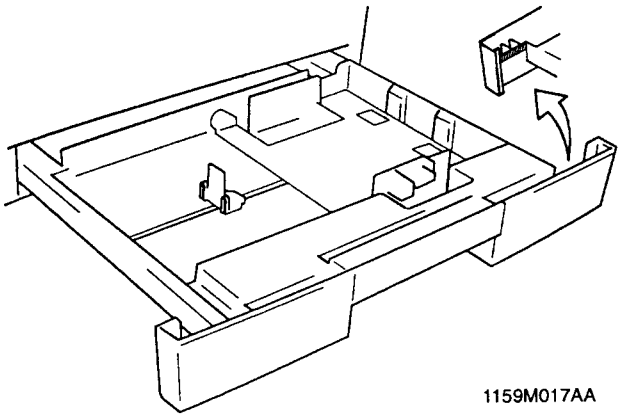

1159M017AA

Rear End

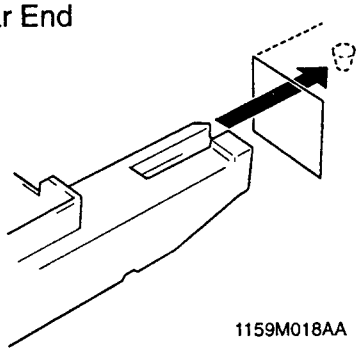

1159M018AA

Front End

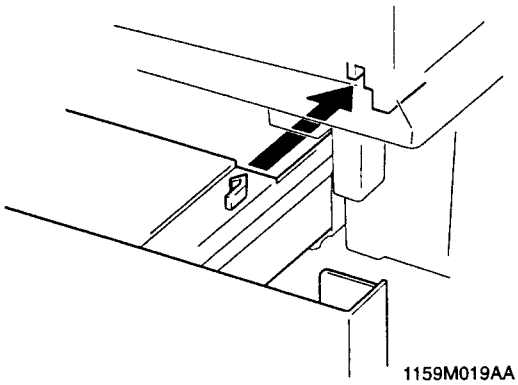

1159M019AA

1159SBM1503A

15-3. Paper Lifting Plate

When the lock lever installed on the back side of the tray on the paper take-up end moves past the protrusion at the center of the copier rail, it unlocks the lock lever, allowing the two springs to push up the Paper Lifting Plate.

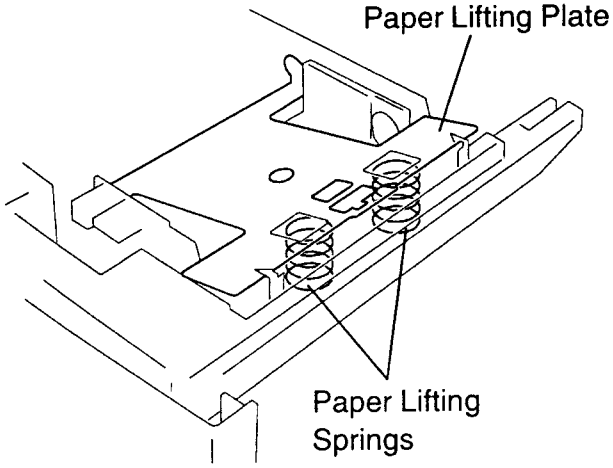

1159M020AA

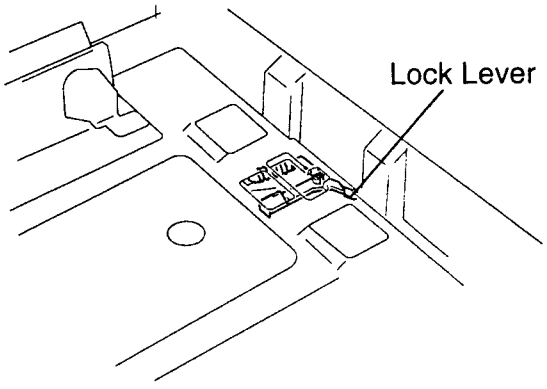

1159M023AA

15-4. Paper Empty Detection

When the Drawer runs out of paper, the Actuator for the Paper Empty Sensor drops into the cutout in the Paper Lifting Plate. This activates the Paper Empty Sensor and the copier will know that the Drawer has run out of paper.

Also, there is a possibility of the Actuator activating the Sensor by flexing of a sheet of paper as it is taken up and fed in. To prevent this false detection of a paper-empty condition, the paper empty detection is enabled only when the Paper Take-Up Roll is in the retracted position. (See 15-6. "Paper Take-Up Roll" for the retracted position of the Paper Take-Up Roll.)

<Control>

	Control Signal	Blocked	Unblocked	WIRING DIAGRAM
PC1	PWB-A PJ2A-2	L	H	10-F

1159SBM1505A

15-5. Paper Separating Mechanism

The tray has fingers that separate the top sheet of paper from the rest of the paper stack at paper take-up. The Fingers are fitted to the right front and rear corners of the Drawer. When the Paper Take-Up Roll starts turning to take up the top sheet of paper, its turning force is directly transmitted to the top sheet of paper as it is in direct contact with the Paper Take-Up Roll. That force overcomes the block of the Fingers, causing the top sheet of paper to ride over the Fingers and be fed out of the Drawer into the copier.

As to the second sheet of paper, the paper transport force obtained through friction with the top sheet of paper is weak and does not allow the second sheet of paper to ride over the block of the Fingers. Hence, the second sheet of paper remains stationary with the rest of the paper stack in the Drawer.

When there are only two sheets of paper left in the Drawer, the bottom sheet can be fed with the top one if the friction of the Paper Lifting Plate is weak. The Friction Plate affixed to the Paper Lifting Plate prevents this from happening.

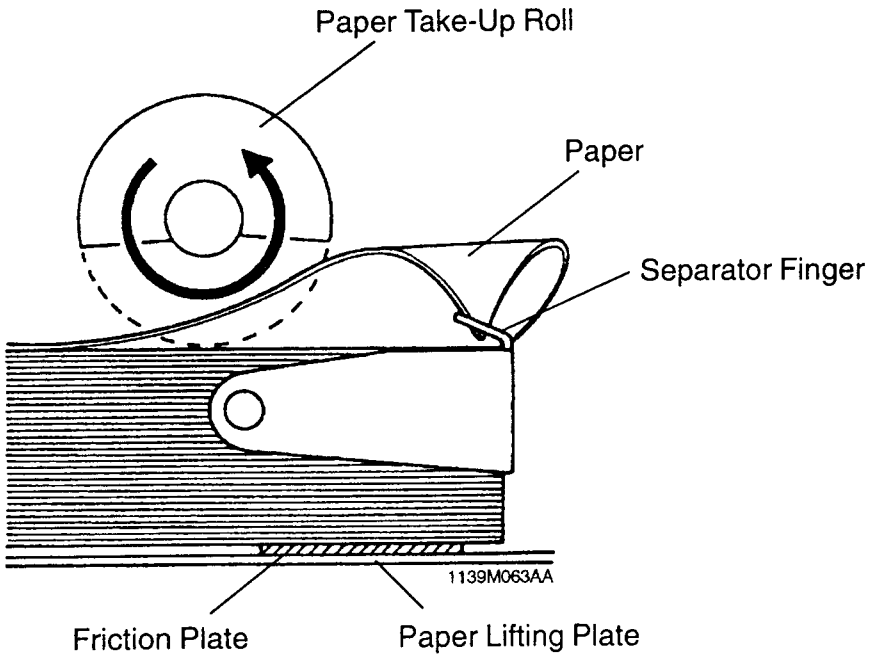

15-6. Paper Take-Up Roll

Since the Paper Lifting Plate is raised at all times by the Paper Lifting Springs, paper is wedged in the mechanism when the Drawer is slid out of the copier if the Paper Take-Up Roll is round in shape. So the Take-Up Roll is semicircular and the circular part of the Roll is positioned on top at times other than take-up. For convenience, we call this position of the Paper Take-Up Roll the "retracted" position.

The Paper Take-Up Roll is grooved to keep good friction even under heavy loading.

The Paper Take-Up Roll is driven when the Paper Take-Up Solenoid (SL2) is energized. The Roll is turned one complete turn for each single sheet of paper.

The Paper Transport Sensor (PC2) is used to detect whether a sheet of paper has been properly taken up or not.

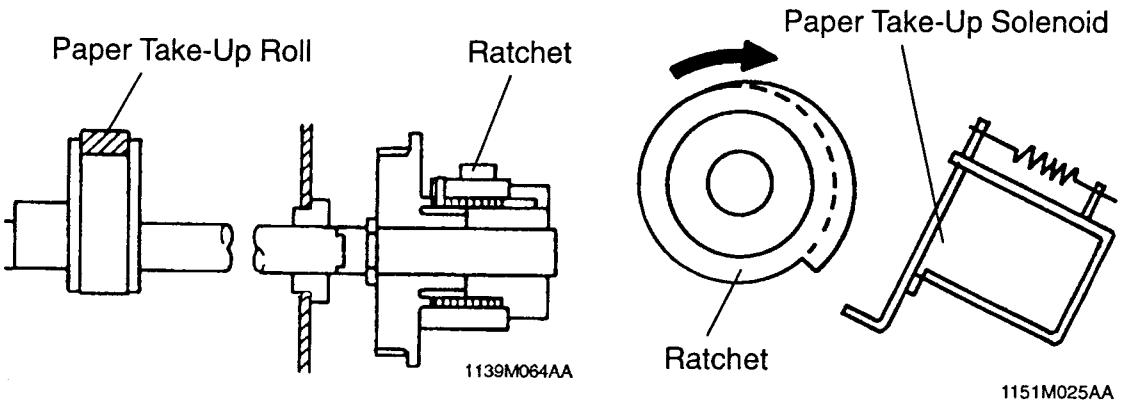

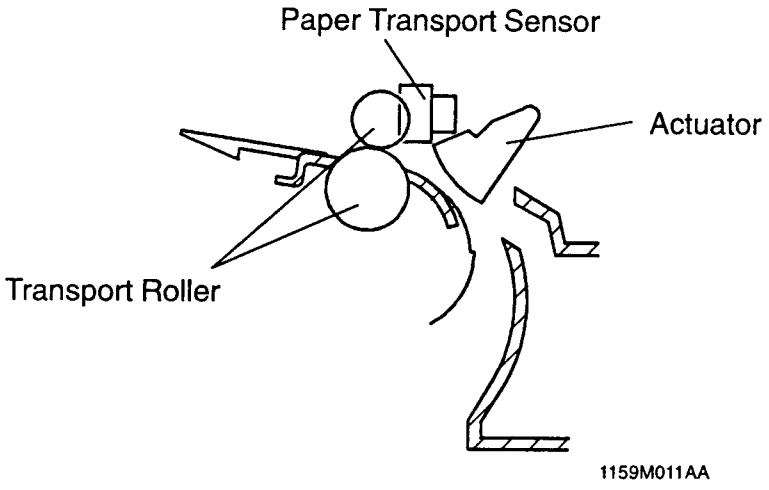

1159SBM1507A

15-7. Paper Take-Up Retry Control

To minimize the occurrence of a paper misfeed due to a slippery Paper Take-Up Roll, the Paper Take-Up Solenoid is energized a second time if a sheet of paper fails to reach the Paper Take-Up Detecting Sensor within T_1 sec. after the solenoid has been deenergized. The solenoid is energized a second time 0.36 sec. after the above-mentioned period of 0.95 sec. has elapsed. (This is referred to as the paper take-up retry function.)

A misfeed results if the sheet of paper does not reach the Paper Take-Up Detecting Sensor even after three paper take-up sequences.

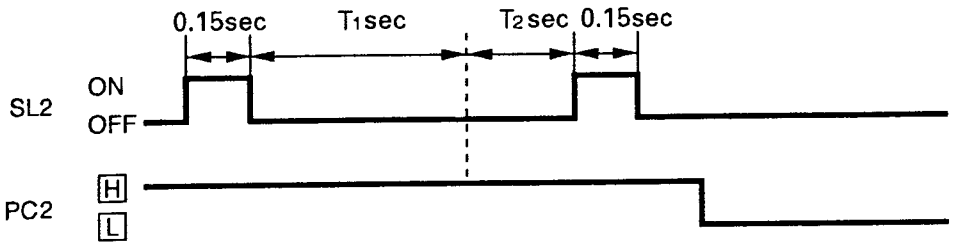

1159T07MCA

(Sec)

	T_1	T_2
Tray	0.95	0.36
Multi Bypass Table	0.29	0.22

16 VERTICAL PAPER TRANSPORT

The sheet of paper taken up by the Paper Take-Up Roll from the tray is fed along the paper guide to the Transport Rollers.

The Transport Rollers receive drive from Main Drive Motor M1, turning at all times whenever M1 remains energized.

Paper Transport Sensor PC2 located at the Transport Rollers detects a sheet of paper taken up and fed in from the tray or Multi Bypass Table.

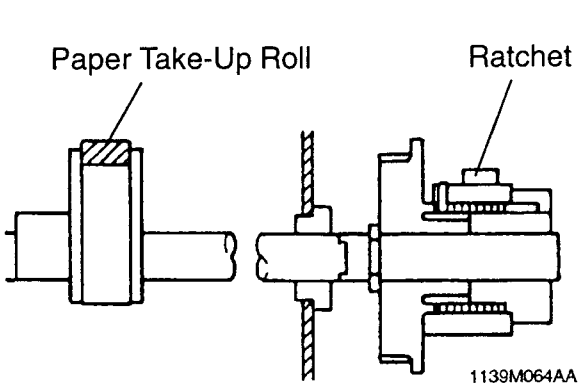

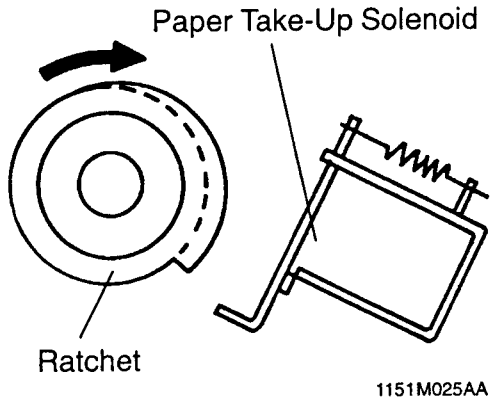

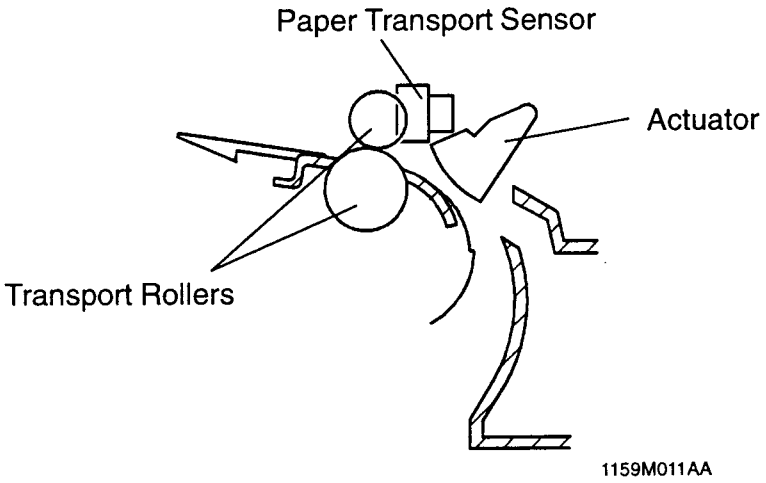

<Control>

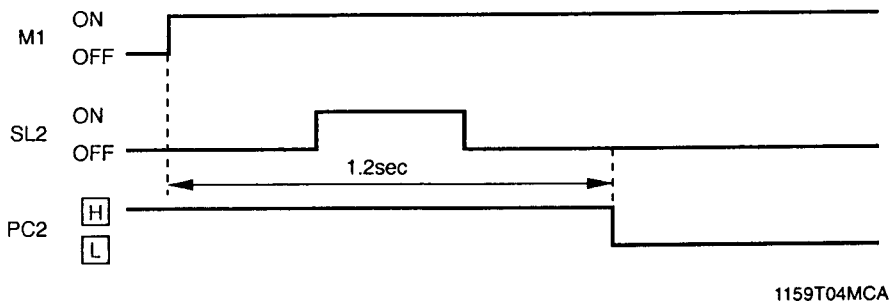

	Control Signal	Energized	Deenergized	WIRING DIAGRAM
M1	PWB-A PJ4A-4	L	H	2-I
SL2	PWB-A PJ6A-2	L	H	10-E

	Control Signal	Blocked	Unblocked	WIRING DIAGRAM
PC2	PWB-A PJ3A-2	L	H	2-D

17 SYNCHRONIZING ROLLERS

The Synchronizing Rollers, operating in phase with the Scanner scan motion and paper feeding, synchronize the leading edge of the copy paper accurately with the leading edge of the toner image on the PC Drum.

The Upper Synchronizing Roller is a metal roller covered with a polyvinyl chloride tubing, while the Lower one is a rubber roller.

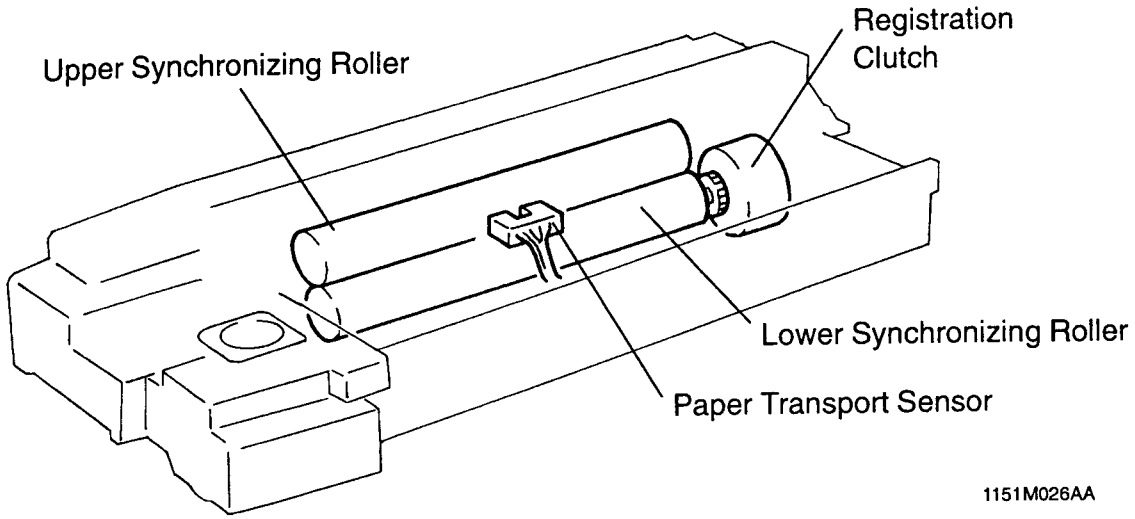

To facilitate clearing of misfeeds, the Upper Synchronizing Roller is installed in the Imaging Unit. It is fitted to the Guide Frame of the Imaging Unit and the Compression Springs at the front and rear ends press the Roller downward so that it makes contact with the Lower Synchronizing Roller. The Lower Roller is driven by the drive source a gear train transmits the rotation of the Lower Roller to the Upper Roller, thus ensuring good paper transport performance.

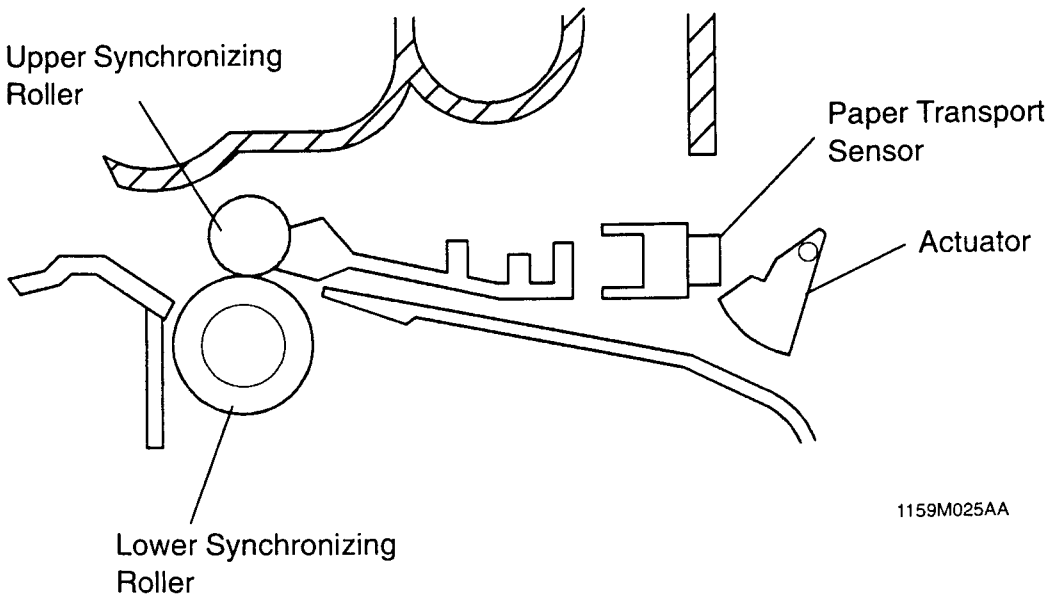

1159SBM1701A

17-1. Upper Synchronizing Roller Positioning

Since the Upper Synchronizing Roller is fitted to the Imaging Unit, it must be correctly positioned with reference to the Lower Synchronizing Roller when the Upper Half of the copier is swung down into the locked position. For this purpose, slits are cut in the lower copier frame and the Bushings of the Upper Synchronizing Roller fit into these slits.

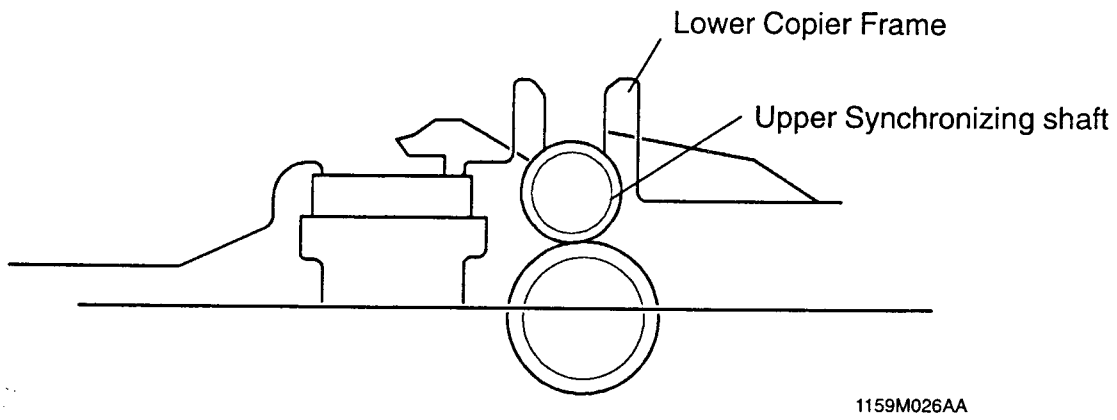

1159SBM1702A

17-2. Paper Dust Remover

The Paper Dust Remover is installed so that it makes contact with the Upper Synchronizing Roller. Since the Upper Synchronizing Roller is covered with a vinyl tubing, triboelectric charging occurs as the Roller turns in contact with the Paper Dust Remover. As paper is then fed between the Synchronizing Rollers, the charges on the tubing attract paper dust from the paper. The dust is then transferred onto the Paper Dust Remover.

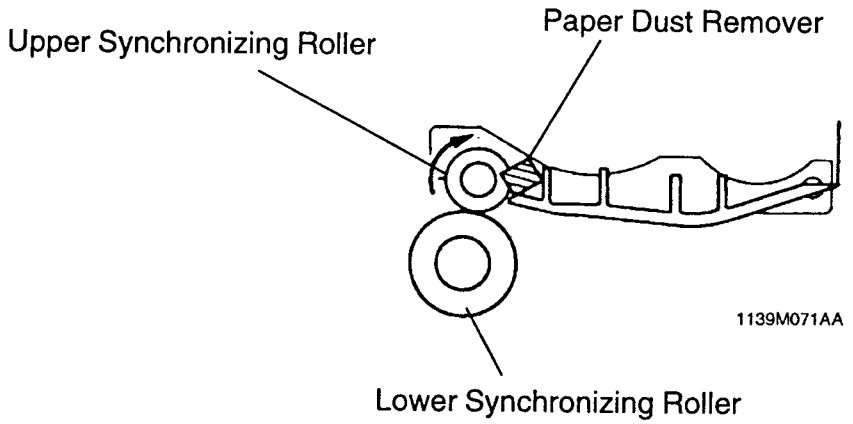

1159SBM1703A

17-3. Synchronizing Roller Control

The Synchronizing Rollers are started as Registration Clutch CL1 is energized upon reception of an Image Leading Edge signal from PWB-A.

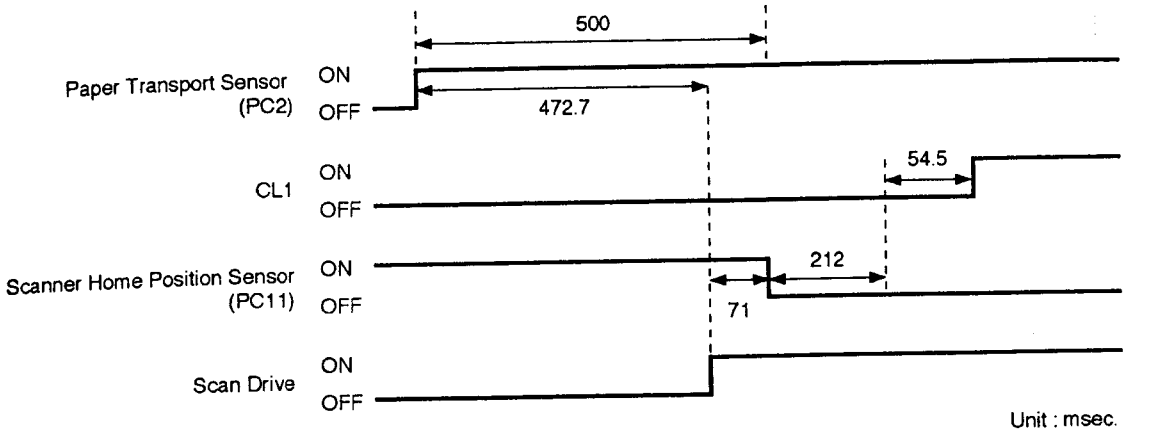

	Control Signal	Energized	Deenergized	WIRING DIAGRAM
CL1	PWB-A PJ7A-13	L	H	2-D

	Control Signal	Blocked	Unblocked	WIRING DIAGRAM
PC2	PWB-A PJ3A-2	L	H	2-D

18 PAPER TRANSPORT

After having gone through the image transfer and paper separation processes, the paper is then transported along the guide plate to the Fusing Unit. There is a resistor provided between the guide plate and frame to prevent void images.

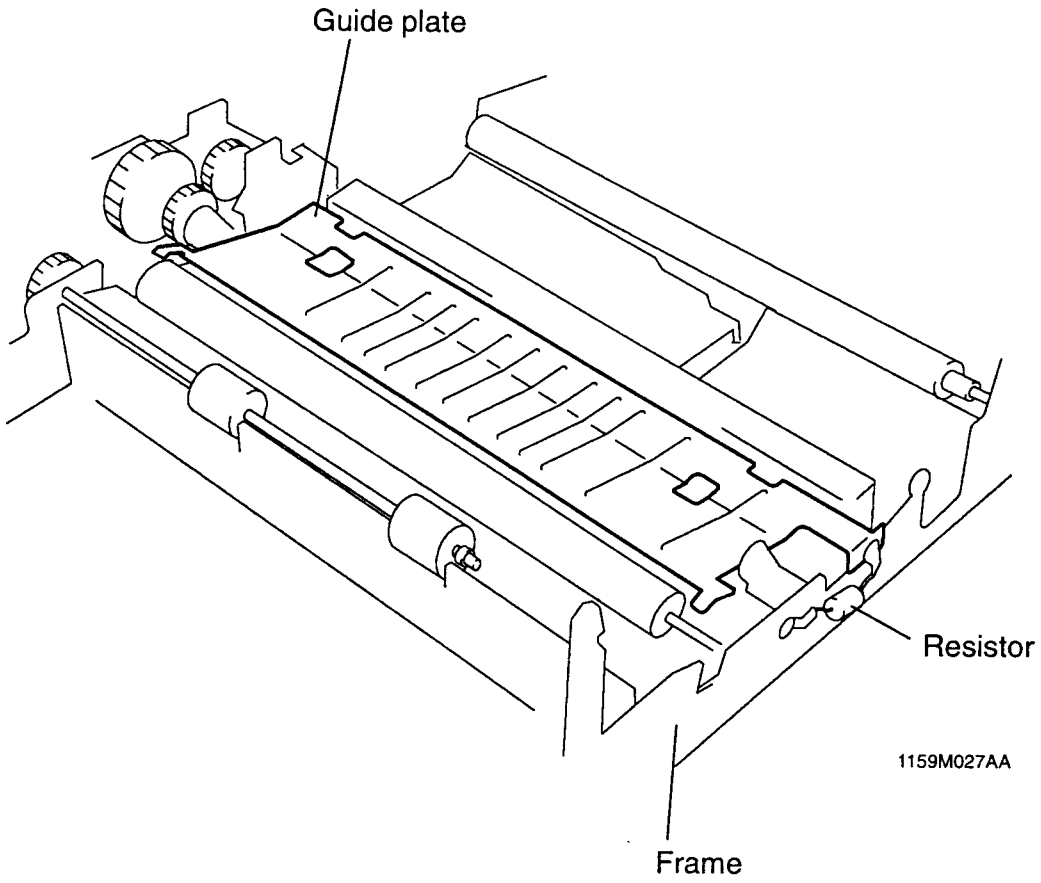

1159SBM1900A

19 FUSING UNIT

The Upper Fusing Roller and Lower Fusing Roller together apply heat and pressure to the toner and paper to permanently fix the developed image to the paper.

Drive for the Upper Fusing Roller is transmitted from the Main Drive Motor to the Upper Fusing Roller Drive Gear. The Lower Fusing Roller is in contact with, and thus driven by, the Upper Fusing Roller.

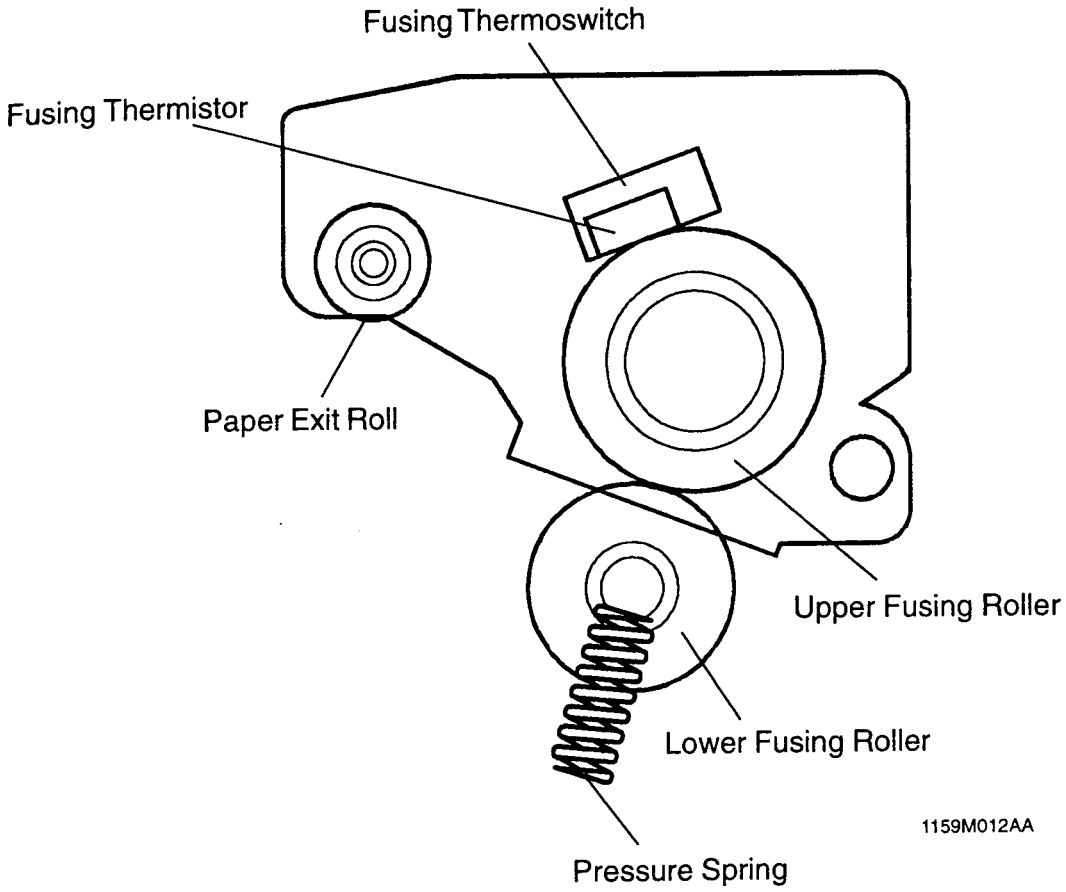

19-1. Fusing Temperature Control

This copier employs a roller packed with heat insulator for the Upper Fusing Roller to shorten warming-up time. Fusing Thermistor TH1 fitted to the Upper Fusing Roller is used to keep an optimum fusing temperature at all times (controlled fusing temperature: 190°C).

In standby : Temperature control at 170°C is provided considering the heating speed by the heater and the time it takes the paper to enter the Fusing Unit.

During a copy cycle : Temperature is controlled at 200°C for the first 2 minute after the start of the copy cycle. If a multi-copy cycle runs over 2 minute, a 190°C control is provided after the 2-min. period.

TH1 is located at a point 20.9 mm to the rear with reference to the paper path reference position, thereby preventing low-temperature offset and insufficient fusing strength that could otherwise occur when small-size paper is fed through.

The Upper Fusing Roller is also provided with Fusing Thermoswitch TS1 that turns OFF to cut off the power line to the Fusing Unit when the roller gets abnormally hot.

Warming-up Time = Within 10 sec.

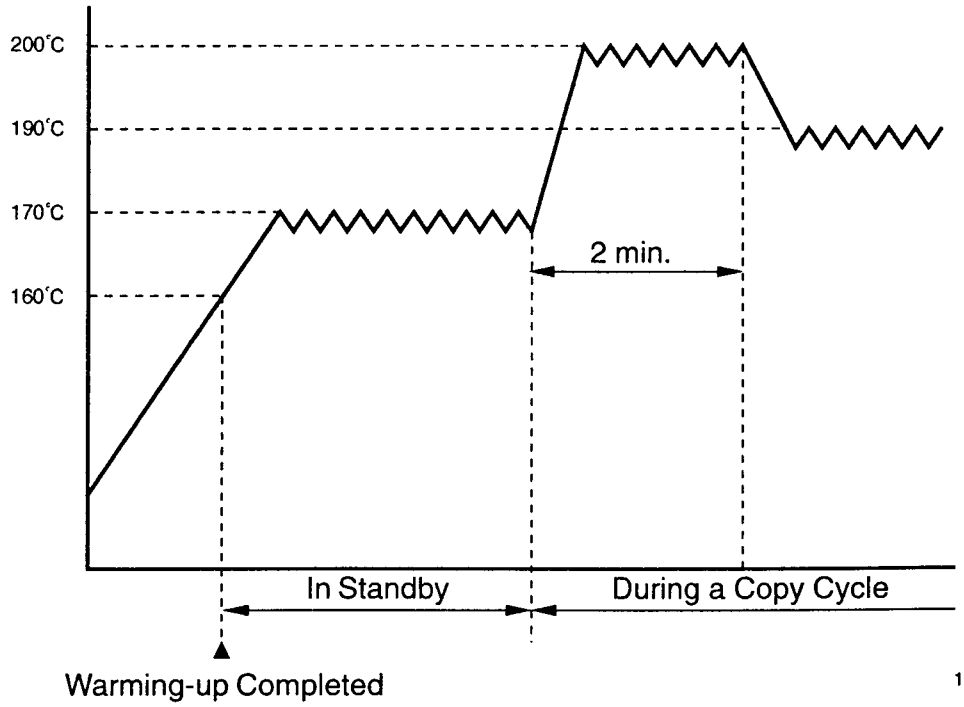

1159SBM1902A

19-2. Fusing Rollers Pressure Mechanism

Pressure Springs are installed at both ends of the Lower Fusing Roller. These springs contact the bearings mounted on both ends of the Lower Fusing Roller and exert pressure through the Lower Fusing Roller to the Upper Fusing Roller which is installed in the Fusing Unit.

The Fusing Unit is divided into an upper and a lower half, and the upper half can be swung open. The Upper Half of the copier, when locked in position, presses the upper half of the Fusing Unit down onto its lower half.

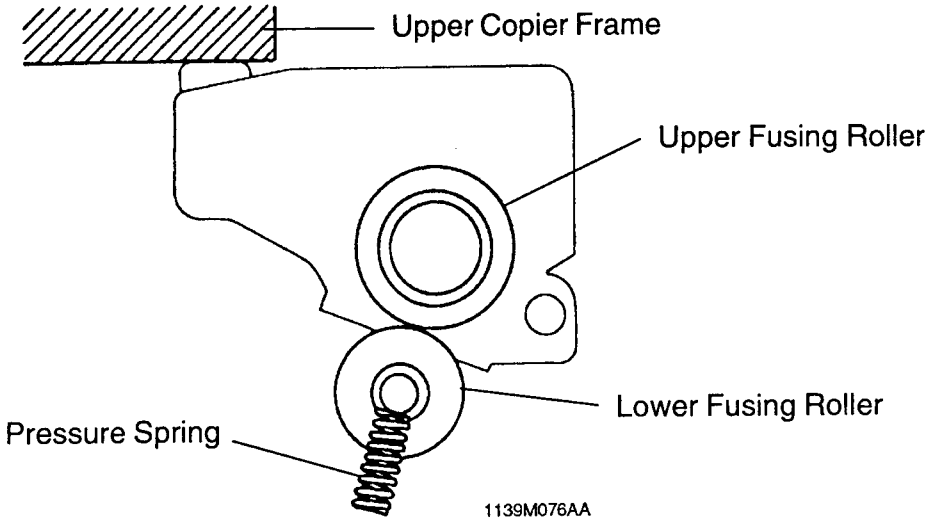

20 EXIT UNIT

The Paper Exit Roller/Rolls feed the paper, to which the developed image has been fixed, out of the Fusing Unit onto the Copy Tray. The Charge Neutralizing Brush touches the surface of the sheet of paper being fed out of the Fusing Unit to neutralize any static charge left on it. The Upper and Lower Separator Fingers strip the paper from the surface of the Upper/Lower Fusing Roller.

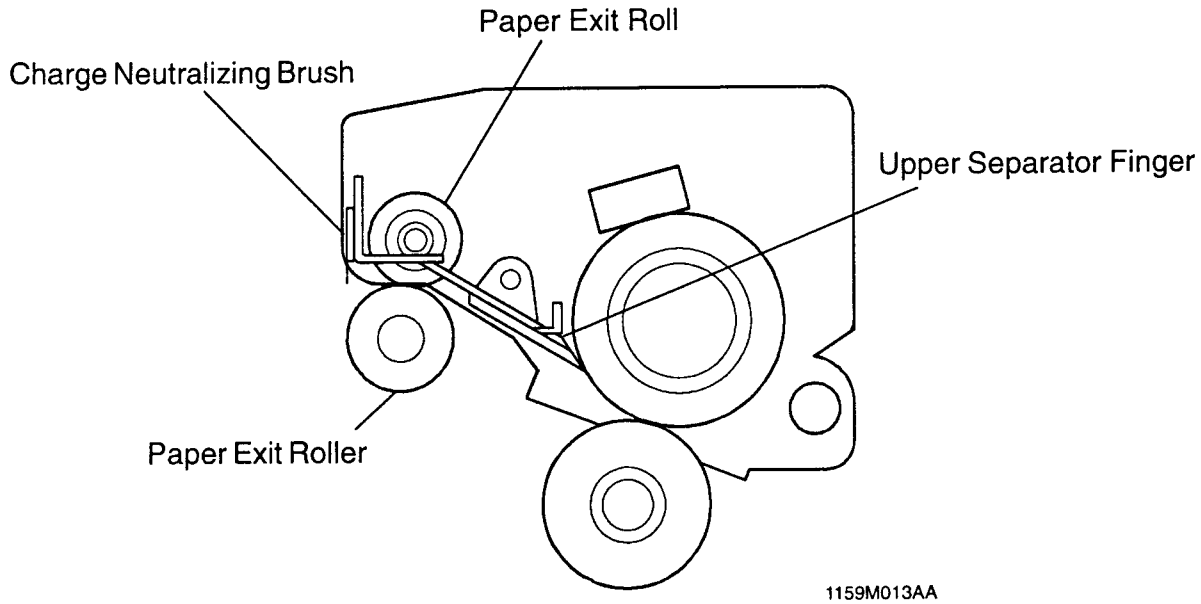

1159SBM2001A

20-1. Upper/Lower Separator Fingers

The Upper Fusing Roller is provided with two Separator Fingers which are laid out as shown below.

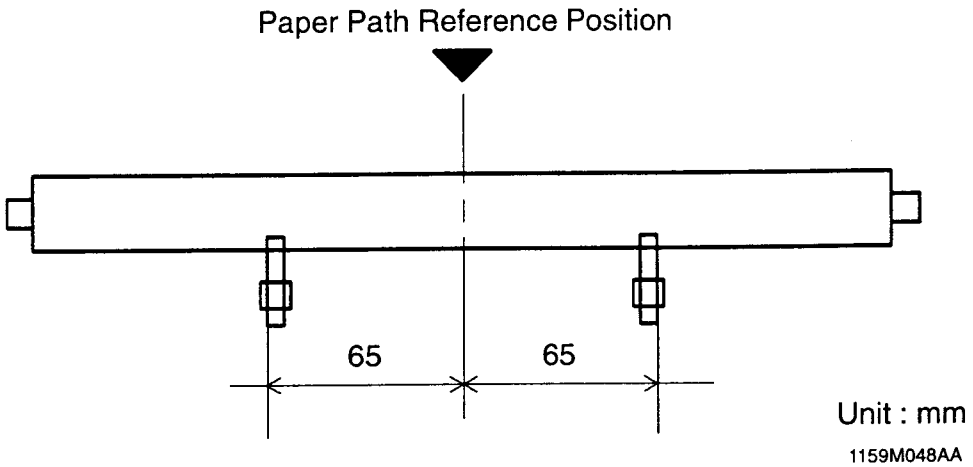

1159SBM2002A

20-2. Paper Exit Sensor

Paper Exit Sensor PC3 is located at the paper exit of the lower half of the copier, detecting the sheet of paper being fed out of the copier.

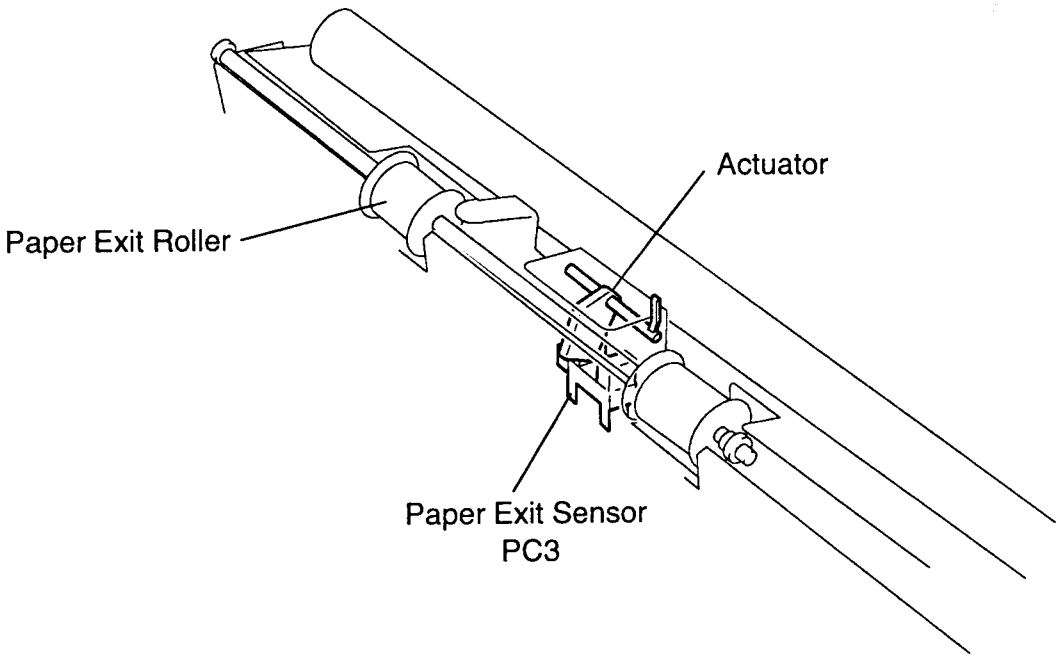

1159M028AA

	Control Signal	Blocked	Unblocked	WIRING DIAGRAM
PC3	PWB-A PJ7A-10	L	H	2-F

21 MULTI BYPASS TABLE

The optional Multi Bypass Table permits the user to make multiple copies (up to 30) on paper that cannot be fed automatically via any built-in paper drawer of the copier.
*EP1031, EP1031F only

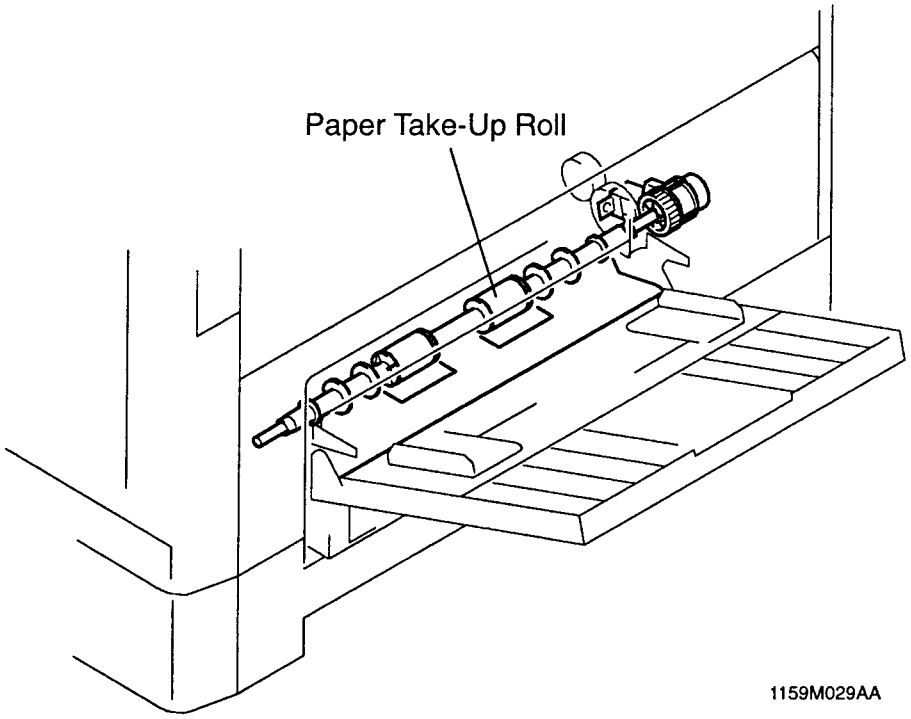

1159M029AA

21-1. Paper Take-Up Mechanism

The semi-circular portions of the Paper Take-Up Rolls are in the upper position in the standby state so that the rolls will not hamper proper loading of paper. When the Start key is pressed, Multi Bypass Paper Take-Up Solenoid SL3 is operated to press the Paper Take-Up Rolls against the paper stack for paper take-up.

In Standby

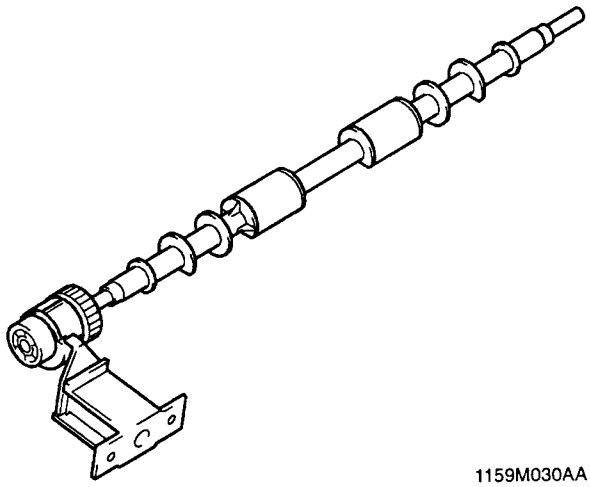

1159M030AA

At Take-Up

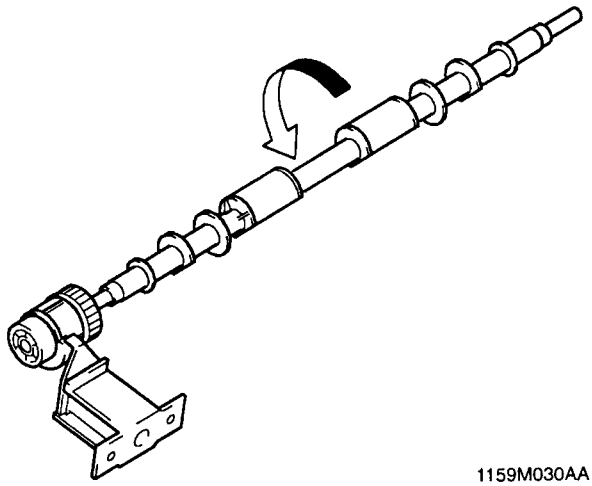

1159M030AA

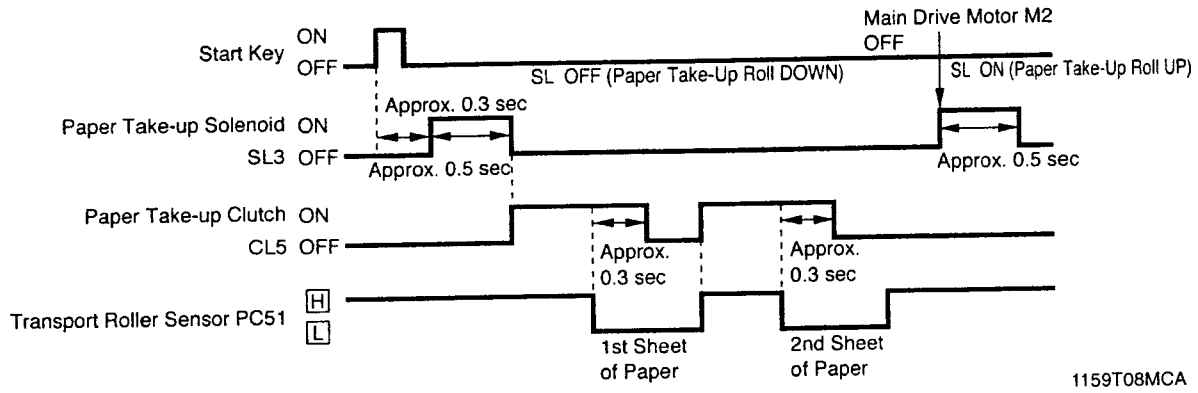

1159T08MCA

	Control Signal	Energized	Deenergized	WIRING DIAGRAM
SL3	PWB-A PJ5A-2	L	H	10-F

21-2. Paper Separating Mechanism

The paper separating mechanism of the Multi Bypass Table uses a Paper Separator Pad affixed to the Multi Bypass Table directly under the Take-up Rolls. It ensures that only the top sheet of paper is fed in by properly separating the second sheet of paper from the top one.

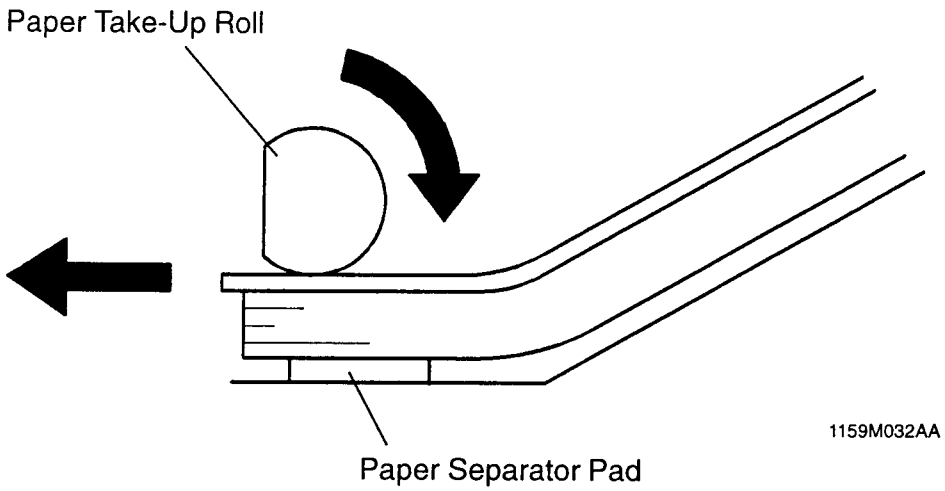

1159SBM2200A

22 COOLING FAN

Ozone produced by the PC Drum Charge Corona is drawn out of the copier by Ozone Fan Motor M3 and absorbed by the Ozone Filter.

M3 is turned either at high or low speed. It turns at low speed in the standby state and at high speed during a copy cycle to cool the inside of the copier.

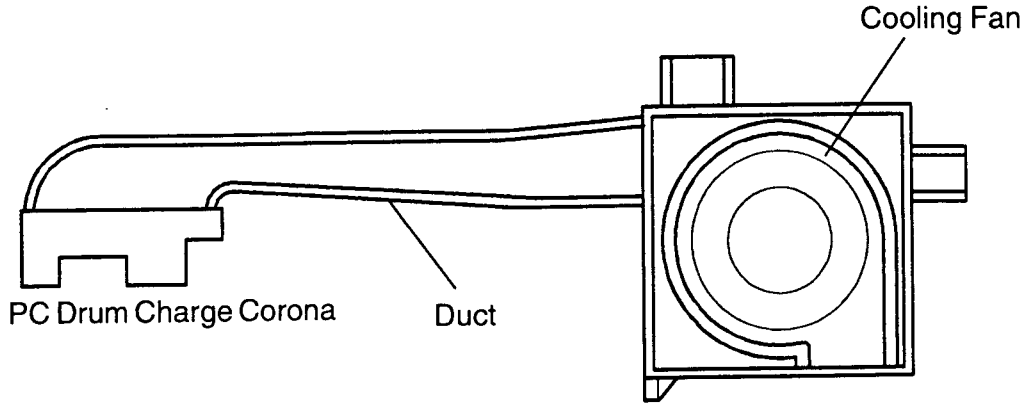

1159M037AA

	Control Signal	Energized	Deenergized	WIRING DIAGRAM
M3	PWB-A PJ13A-1	H	L	2-E

23 OPTICAL SECTION COOLING FAN

Optical Section Cooling Fan Motor M2 blows outside air against the Original Glass which is heated by Exposure Lamp LA1.

The filter at the intake port of the fan motor prevents dust and dirt from entering the optical section of the copier.

M2 keeps on turning at all times except in the standby state (including when the Power Switch is turned ON).

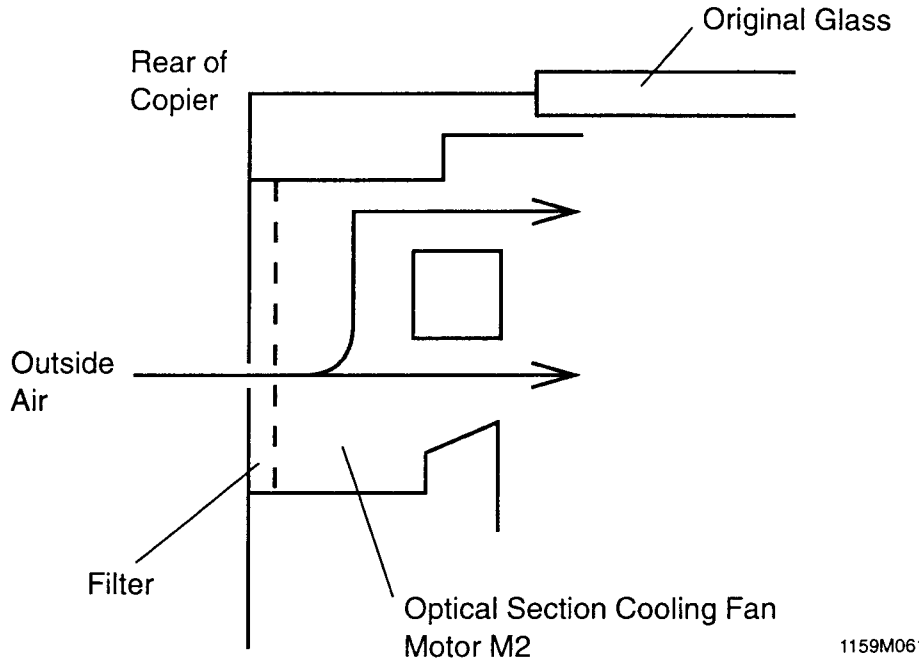

	Control Signal	Energized	Deenergized	WIRING DIAGRAM
M2	PWB-A PJ14A-1	L	H	5-E

EP1030F, EP1031F

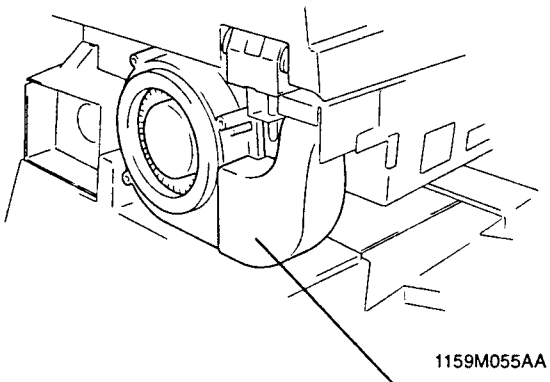

EP1030, EP1031

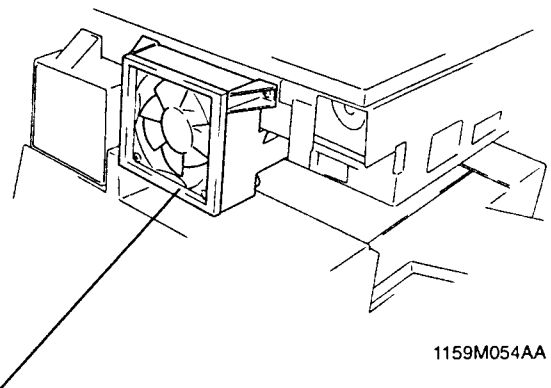

Optical Section Cooling Fan Motor M2

- Up to 50 sheets of A5 lengthwise to A4 lengthwise or 5-1/2" × 8-1/2" to 8-1/2" × 14" (inch areas) can be loaded in the SDH.

1159SBM2401A
24-1. Document Take-Up Mechanism

- The document take-up mechanism takes up the top sheet of a document set placed on the Document Feeding Tray and transports it up to the Registration Roller. The drive for this mechanism comes from SDH Drive Motor M10.

1159SBM2402A
24-2. Document Separating Mechanism

- When two or more sheets of document are taken up by the Document Take-Up Roll, the document separating mechanism prevents the second and subsequent sheets from being fed further into the SDH. It consists of a Feed Roll, Separator Roll, and a torque limiter.
- When only one sheet is taken up, the turning torque of the Feed Roll is transmitted via the paper to the Separator Roll. However, since the stationary torque of the Separator Roll (torque limiter) is greater than the turning torque of the Feed Roll, the Separator Roll is driven by the Feed Roll to feed the paper onward.
- If two sheets are taken up at once, the Separator Roll remains stationary because of the stationary torque of the torque limiter, since the friction coefficient between the top sheet and second sheet is low. This means that the second and subsequent sheets are blocked, while only the top sheet is fed in.

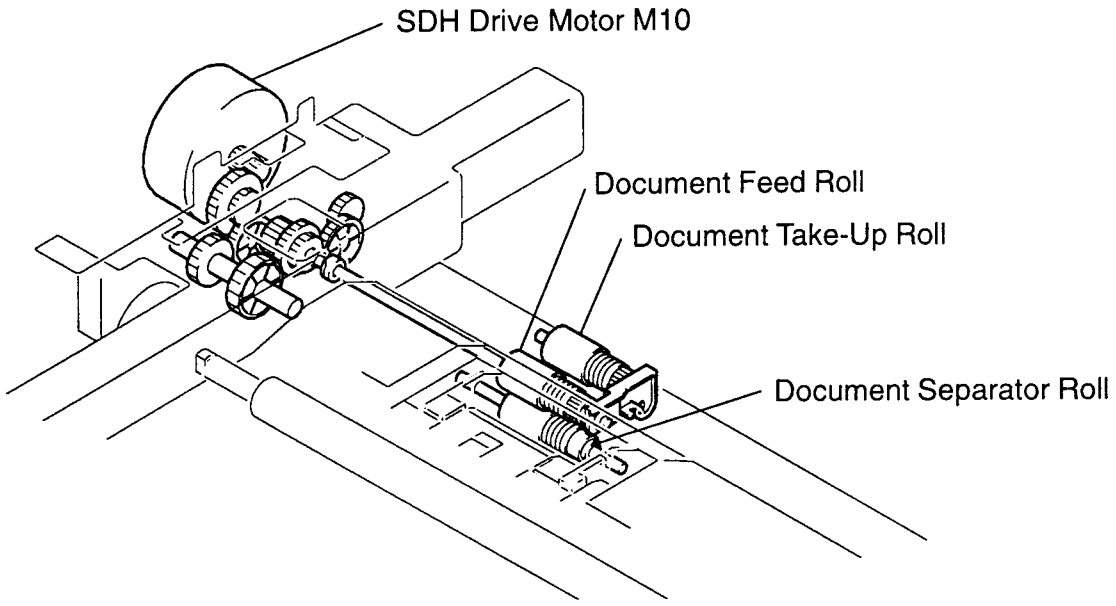

1159M034AA

	Control Signal	Energized	Deenergized	WIRING DIAGRAM
M10	PWB-A PJ1A-8	L	H	9-B

24-3. Document Transport/Exit Mechanism

- The document transport mechanism transports the document, fed from the take-up section up to the Registration Roller, on to the exposure position along the guide plate.
- The document exit mechanism ejects the document transported by the transport mechanism out into the Document Exit Tray.

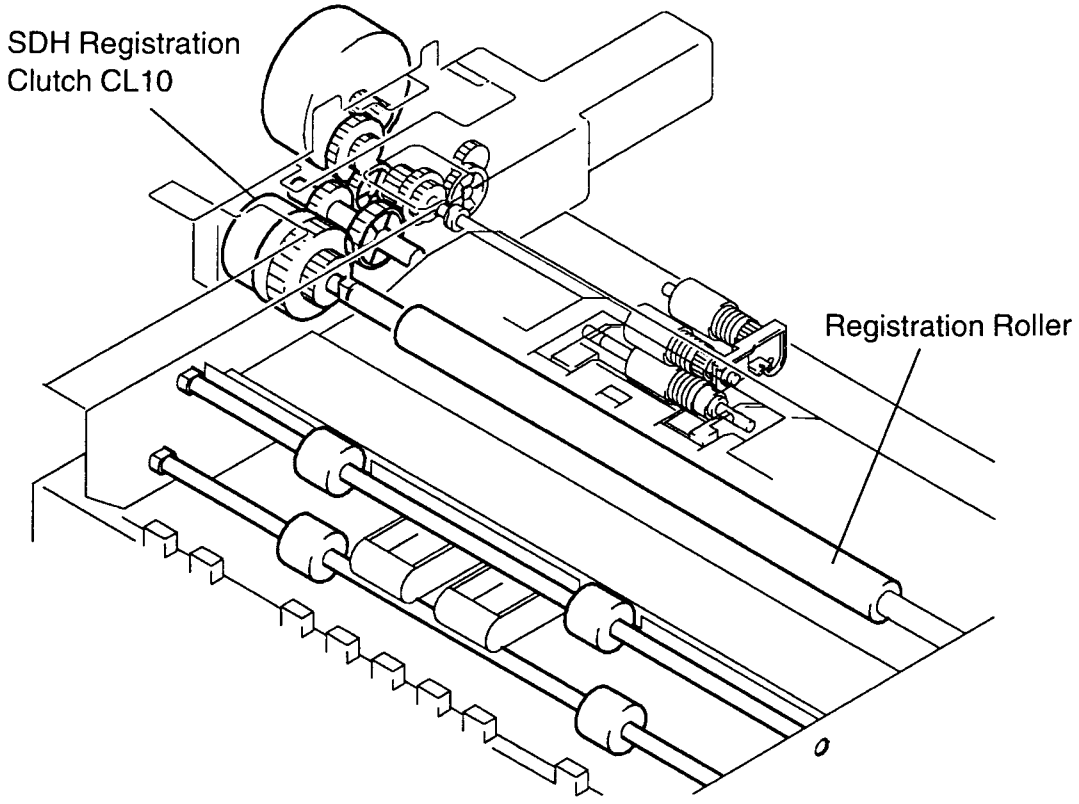

1159M035AA

- The rollers at the transport and exit mechanisms are driven by a gear train from SDH Drive Motor M10, turned when Registration Clutch CL10 is energized.

	Control Signal	Energized	Deenergized	WIRING DIAGRAM
CL10	PWB-A PJ1A-7	L	H	11-D

24-4. SDH Mode

- When in the SDH mode, the Scanner is moved to, and fixed at, the SDH exposure position and scans the document as the document is transported above the Scanner.

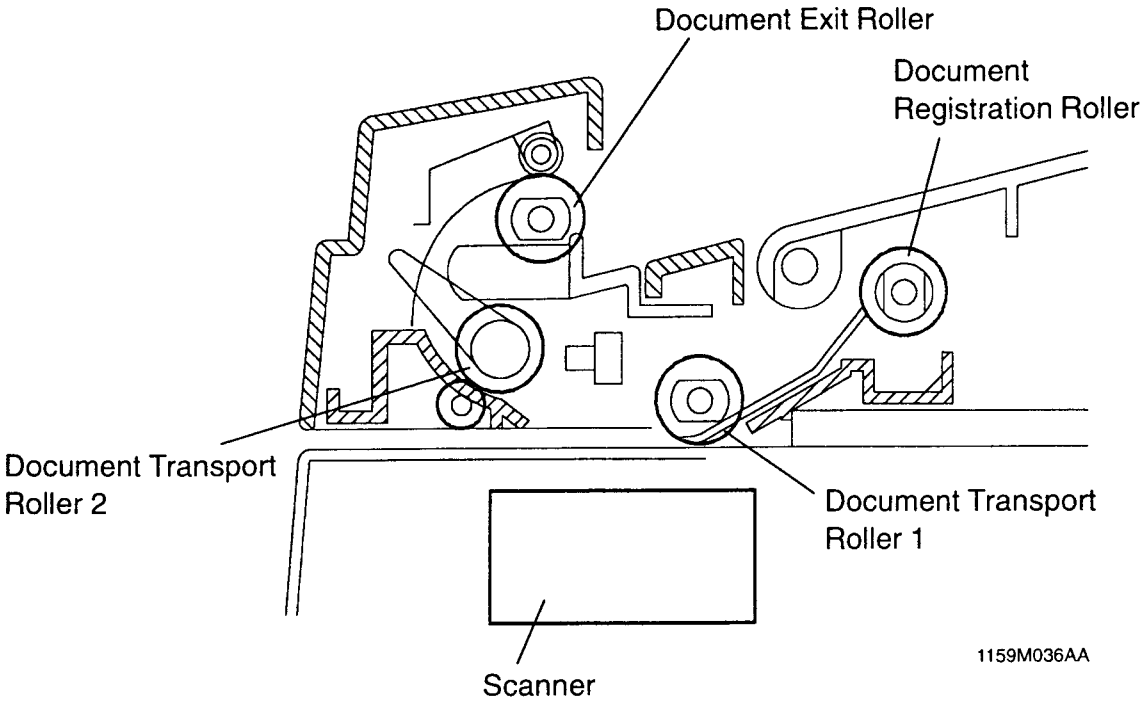

When feeding two sheets of Documents

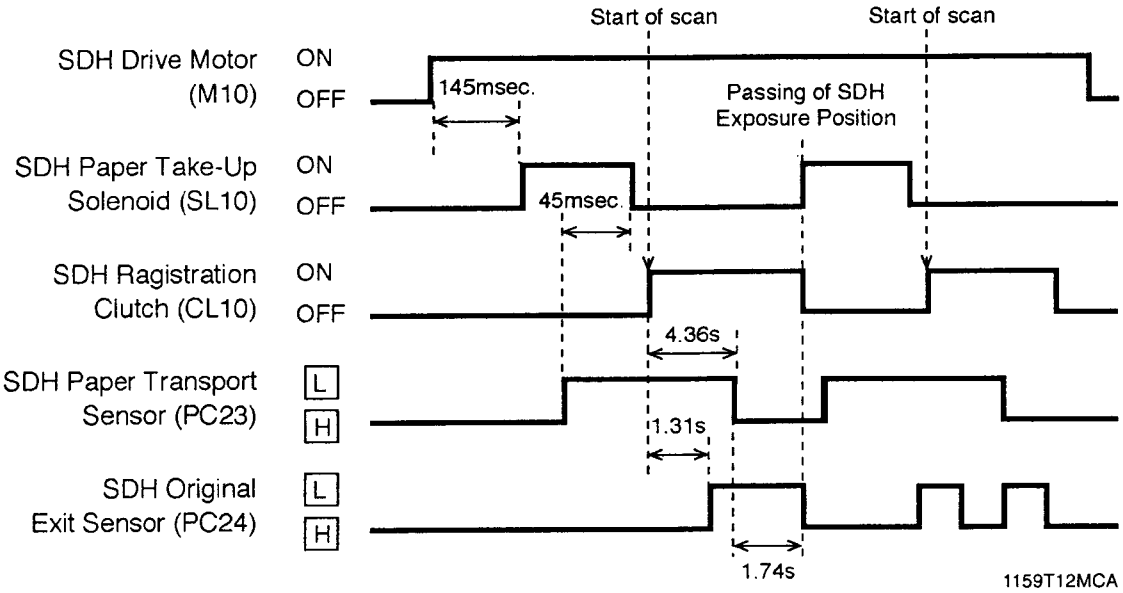

	Control Signal	Blocked	Unblocked	WIRING DIAGRAM
PC23	PWB-A PJ1A-10	L	H	11-C
PC24	PWB-A PJ1A-9	L	H	11-D

	Control Signal	Energized	Deenergized	WIRING DIAGRAM
M10	PWB-A PJ1A-8	L	H	9-B
SL10	PWB-A PJ1A-6	L	H	11-C
CL10	PWB-A PJ1A-7	L	H	11-D

25 MEMORY BACKUP

Counter value and Data of Teck. Rep. Mode or User Mode are memorized into the IC3 (EEPROM) on the Master Board PWB-A.

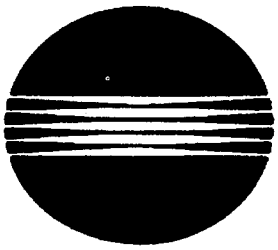

MINOLTA

Copyright
1997 MINOLTA Co., Ltd
Printed in Japan

Use of this manual should be strictly supervised to avoid disclosure of confidential information.

MINOLTA CO., LTD.

1159-7991-11 9707437(
Printed in Japa

1159SBD000AA

EP1030/EP1030F
EP1031/EP1031F

DIS/REASSEMBLY, ADJUSTMENT

MINOLTA

1159SBD0000BA

◆ For the Utmost safety ◆

⚠ Warning

- For replacement parts, use the genuine parts with their part numbers specified in the parts manual. Use of a wrong part could cause an overload or dielectric breakdown resulting in an electric shock or fire.
- Replace a blown fuse or thermal fuse with the corresponding genuine part with its part number specified in the parts manual. Use of a fuse with a different rating or one with the same rating but of a different type can result in a fire.
  Especially when a thermal fuse blows frequently, the thermal control system is probably faulty.
  Be sure to take necessary action.
- Before attempting to disassemble the machine, be sure to unplug its power cord. The machine contains a high voltage unit and a circuit with a large current capacity that may cause an electric shock or burn from sparking.
  The machine also contains quick moving parts, which could injure a person.
  If the machine uses a laser, a person can lose his/her eyesight by a laser beam leak.
- Wherever feasible, keep the covers and parts mounted when energizing the machine.
  If it is absolutely necessary to energize the machine with its cover removed, do not touch an exposed part that is being charged and use care not to allow your clothing to be caught by a timing belt, gear, or other moving part.
- Do not leave the machine unattended while it is being energized.

⚠ Caution

- To actuate an interlock switch with a cover removed or opened, be sure to use the interlock switch actuating jig. Use of folded paper can damage the interlock switch mechanism.

⚠ Caution

- A high voltage is being applied to the part marked with the symbol shown on the right. Touching it can cause an electric shock. Be sure to unplug the power cord when servicing this part or other parts near it.



- When the machine is energized with any of its covers removed, never use a flammable spray near it, as a fire can result.
- Make sure that correct screws (diameter and length of the screw, binding/tapping screws) are used in the correct places when assembling parts. If a wrong screw is used, a short insulating distance could result. It could also result in collapsed threads, which provides only a poor grounding connection, resulting in an electric shock.
- A toothed washer and spring washer, if used originally, must be reinstalled. If they are left out, a contact failure results, causing an electric shock or fire.
- Replace a lithium cell only with one having the part number specified in the parts manual. An explosion could result if the cell is installed with wrong polarity or a wrong cell is installed.
  Dispose of a used lithium cell according to the applicable local regulations. Never throw it away or abandon it on the user's premises.

◆ Other Precautions ◆

- While the machine is being energized, do not unplug or plug in a connector on a PWB or relay harness.
- Since the Magnet Roller of the Imaging Unit generates a strong magnetic force, do not bring a CRT, watch, floppy disk, or magnetic card near it.
- Use of an air gun or vacuum generates static electricity which can cause the ATDC Sensor and associated parts to break down. Be sure therefore to use a blower brush or cloth to clean these parts. If a unit is to be cleaned, be sure to remove the sensors in advance.
- MOS ICs are susceptible to static electricity. When handling a PWB loaded with MOS ICs, follow precautions given in "INSTRUCTIONS FOR HANDLING THE PWBs WITH MOS ICs."
- The PC Drum is highly delicate. When handling the PC Drum, follow the precautions given in "HANDLING OF THE PC DRUM."
- To reassemble, reverse the order of disassembly unless otherwise specified.
- Note that replacement of a PWB may call for readjustments or resetting of particular items.

CONTENTS

1 SERVICE INSTRUCTIONS

1-1. PRECAUTIONS FOR DISASSEMBLY/ADJUSTMENTS D-1
1-2. INSTRUCTIONS FOR HANDLING THE PWBs WITH MOS ICs D-3
1-3. HANDLING OF THE PC DRUM D-3
1-4. PARTS WHICH MUST NOT BE TOUCHED D-5

2 DISASSEMBLY/REASSEMBLY

2-1. DOORS, COVERS, AND EXTERIOR PARTS: IDENTIFICATION AND REMOVAL PROCEDURES D-6
2-2. REMOVAL OF PWBs D-8
2-3. PAPER TAKE-UP/TRANSPORT SECTIONS D-10
(1) Removal of the Paper Take-Up Roll and Separator Roll Assy D-10
(2) Cleaning of the Paper Take-Up Rolls D-11
(3) Cleaning of the Separator Rolls D-12
(4) Removal of the Synchronizing Roller D-12
(5) Cleaning of the Synchronizing Roller D-12
(6) Cleaning of the Multi Bypass Paper Take-Up Roller D-13
2-4. OPTICAL SECTION D-14
(1) Cleaning of the Original Grass D-14
(2) Cleaning of the Scanner Rail and Bush D-14
(3) Cleaning of the Exposure Lamp D-14
(4) Removal of the Thermal Fuse D-15
(5) Cleaning of the 1st, 2nd, and 3rd Mirrors D-16
(6) Cleaning of the Lens and 4th and 5th Mirrors D-16
(7) Cleaning of the Cooling Fan Filter D-17
(8) Removal of the Scanner Drive Motor M4 ..... D-17
(9) Removal of the Scanner Drive Cable D-18
(10) Winding of the Scanner Drive Cable D-20
2-5. IMAGING UNIT D-23
(1) Removal of the Imaging Unit D-23
(2) Replacement of the PC Drum D-23
(3) Replacement of the Cleaning Blade D-24
(4) Replacement of the Ds Positioning Collars D-25
(5) Replacement of the Starter D-26
(6) Cleaning of the Toner Antispill Mylar D-26
(7) Cleaning of the Toner Satteing Prevention Mylar D-27
(8) Cleaning of the Paper Dust Removal Cleaner D-27

CONTENTS

2-6. PC DRUM CHARGE CORONA AND IMAGE TRANSFER/PAPER SEPARATOR CORONAS D-28
(1) Removal of the PC Drum Charge Corona D-28
(2) Cleaning of the Main Eraser D-28
(3) Cleaning of the PC Drum Charge Corona Housing D-28
(4) Cleaning of the Comb Electrode, Drum Charge Corona D-29
(5) Cleaning of the PC Drum Charge Corona Grid Mesh D-29
(6) Removal of the Image Transfer/Paper Separator Coronas D-29
(7) Cleaning of the Image Transfer/Paper Separator Coronas Housing D-29
(8) Cleaning of the Image Transfer Charge Wire D-30
(9) Cleaning of the Comb Electrode, Paper Separator Corona D-30
(10) Cleaning of the Pre-Image Transfer Guide Plate D-30
2-7. FUSING UNIT D-31
(1) Removal of the Fusing Unit D-31
(2) Cleaning of the Upper Fusing Roller D-32
(3) Cleaning of the Fusing Paper Separator Fingers D-32
(4) Cleaning of the Fusing Thermistor TH1 ..... D-32
(5) Cleaning of the Fusing Thermoswitch TS1 ..... D-33
(6) Removal of the Lower Fusing Roller D-33
(7) Cleaning of the Lower Fusing Roller D-33
(8) Cleaning of the Fusing Unit Entrance Guide Plate D-33
2-8. SDH UNIT (EP1030F/EP1031F Only) D-34
(1) Removing the Paper Feed Roller/Pick-up Roller/ Separator Roller D-34
(2) Cleaning the Paper Feed Roller/Pick-up Roller D-36
(3) Cleaning of the Separator Roll D-37
(4) Cleaning of the Upper Synchronizing Roller D-37
(5) Cleaning of the Lower Synchronizing Roller D-37
(6) Cleaning the Upper Glass Roller D-37
(7) Cleaning the Transport Roller D-37
(8) Cleaning the Exit Roller D-38

CONTENTS

3 ADJUSTMENT

3-1. JIGS AND TOOLS USED D-39
3-2. ADJUSTMENT REQUIREMENTS LIST D-40
3-3. ACCESSING THE TECH. REP. MODE D-41
3-4. ELECTRICAL/IMAGE ADJUSTMENTS D-42
(1) Adjustment of the Maximum Exposure Lamp Voltage for the Manual Mode D-42
(2) Adjustment of Optimum Exposure Setting in the Manual Exposure Mode D-44
(3) Adjustment of Exposure Level in the Auto Exposure Mode D-46
(4) ATDC Adjustment D-47
(5) Adjustment of the Aperture Blades D-48
(6) Adjustment of Zoom Ratio in the Crosswise Direction (EP1031/EP1031F Only) D-49
(7) Adjustment of Zoom Ratio in the Feeding Direction D-51
(8) Adjustment of the Reference Position of the Manual Bypass Table D-53
(9) Adjustment of Paper Feed Cabinet Reference Position D-54
(10) Adjustment of the Leading Edge Registration D-55
●Leading Edge Registration in Full Size Mode D-55
●Leading Edge Registration in Enlargement Mode (EP1031/EP1031F only) D-57
●Leading Edge Registration in Reduction Mode (EP1031/EP1031F only) D-59
(11) Adjustment of the Image Leading Edge Erase Width D-61
(12) Adjustment of Edge Erase (EP1031/EP1031F only) D-63
(13) Adjustment of SDH Reference Position (EP1030F/EP1031F Only) D-64
(14) Adjustment of SDH Leading Edge Registration (EP1030F/EP1031F Only) D-65
(15) Adjustment of SDH Center Alignment (EP1030F/EP1031F Only) D-67
3-5. OTHER ADJUSTMENT D-68
(1) Focus-Positioning of the Scanner and Mirrors Carriage D-68
3-6. POWER SOURCE VOLTAGE ROOT-MEAN-SQUARE-VALUE-TO-MEAN-VALUE CONVERSION TABLE D-69

1139SBD0100A

1 SERVICE INSTRUCTIONS

1159SBD0101A

1-1. PRECAUTIONS FOR DISASSEMBLY/ADJUSTMENTS

Observe the following precautions whenever servicing the copier.

- Be sure to unplug the copier from the outlet before attempting to service the copier.
- The basic rule is not to operate the copier anytime during disassembly.
  If it is absolutely necessary to run the copier with its covers removed, use care not to allow your clothing to be caught in revolving parts such as the timing belt and gears.
- Be sure to use the Interlock Switch Actuating Jig whenever it is necessary to actuate the Interlock Switch with the covers left open or removed.
- Do not plug in or unplug print jacks on the Board or connect or disconnect the Board connectors while power is being supplied to the copier.
- Do not use flammable spray around the copier in operation.
- The Magnet Roller of the Imaging Unit generates strong magnetic force. Do not bring it near a cathode-ray tube or watch.
- Do not use an air gun or vacuum cleaner for cleaning the ATDC Sensor and other sensors, as they can cause electrostatic destruction. Use a blower brush and cloth. If a unit containing these sensors is to be cleaned, first remove the sensors from the unit.
- When handling the PWBs with MOS ICs, observe "Instructions for Handling the PWBs with MOS ICs."
- When handling the PC Drum, observe precautions given in "Handling of the PC Drum."
- Note that replacement of a PWB may call for readjustments or resetting of particular items.
- Use the right screw in the right place at reassembly. Note that some are longer and some are thicker than others.
- A toothed washer is used with the screw that secures the ground wire to ensure positive conduction. Do not forget to insert this washer at reassembly.
- To reassemble the copier, reverse the order of disassembly unless otherwise specified.
- If it becomes necessary to replace the thermal fuse or any other fuse mounted on a board, be sure to use one of the rating marked on the blown fuse.
  Always note the rating marked on the fuse, as the rating and mounting site or number used are subject to change without notice.
- Do not pull out the Toner Hopper while the Toner Bottle is turning, as a damaged Toner Replenishing Motor or locking mechanism could result.
  If the copier is to be run with the Front Door swung down, make sure that the Toner Hopper is in the locked position.

<List of Fuses Used>

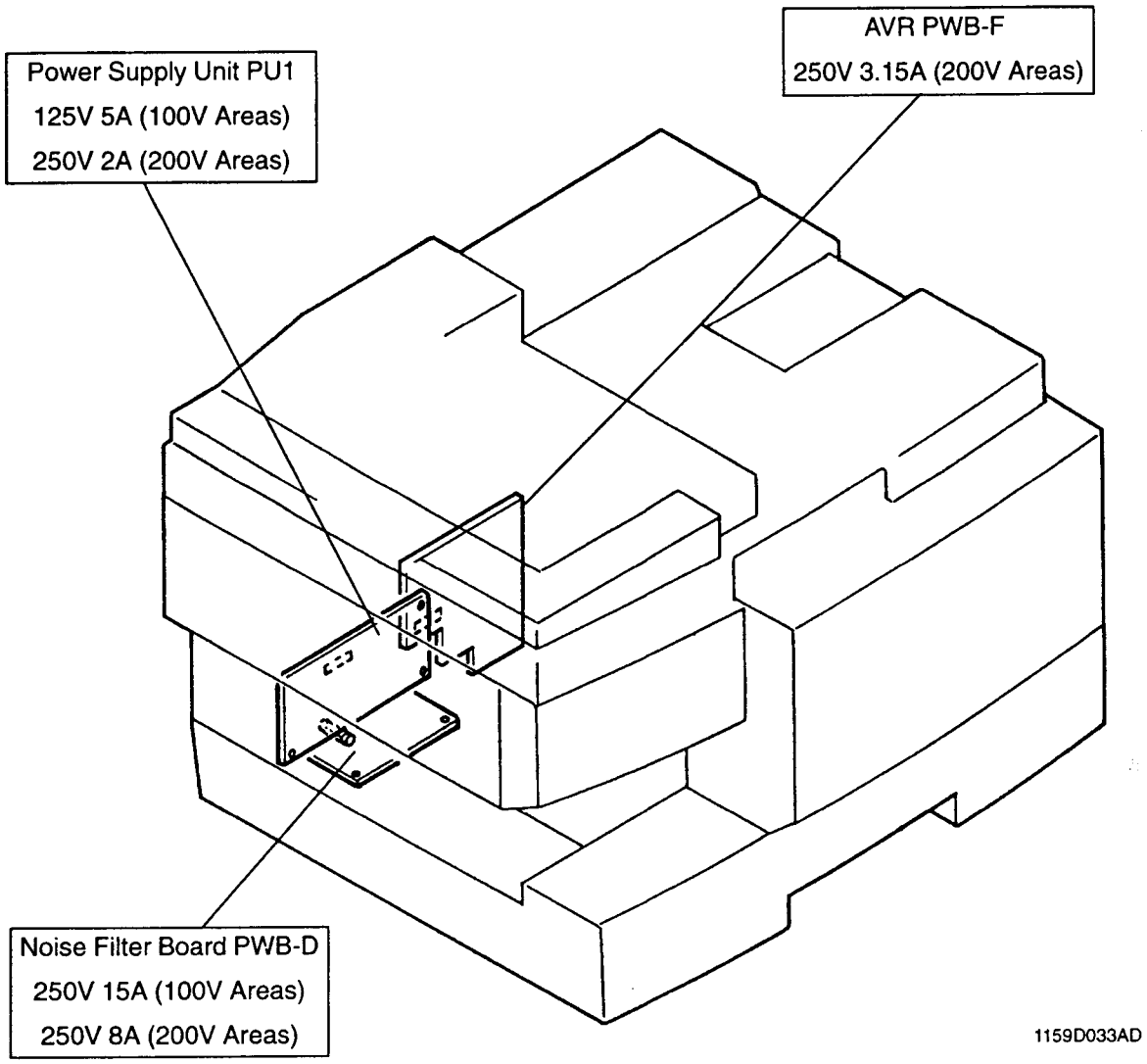

1139SBD0102A

1-2. INSTRUCTIONS FOR HANDLING THE PWBs WITH MOS ICs

The following precautions must be observed when handling P.W. Boards with MOS (Metal Oxide Semiconductor) ICs.

During Transportation/Storage:

- During transportation or when in storage, new P.W. Boards must not be indiscriminately removed from their protective conductive bags.
- Do not store or place P.W. Boards in a location exposed to direct sunlight.
- When it becomes absolutely necessary to remove a Board from its conductive bag or case, always place it on its conductive mat in an area as free as possible from static electricity.
- Do not touch the pins of the ICs with your bare hands.

During Replacement:

- Before unplugging connectors from the P.W. Boards, make sure that the power cord has been unplugged from the outlet.
- When removing a Board from its conductive bag or conductive case, do not touch the pins of the ICs or the printed pattern. Place it in position by holding only the edges of the Board.
- Before plugging connectors into the Board, make sure that the power cord has been unplugged from the power outlet.

During Inspection:

- Avoid checking the IC directly with a multimeter; use connectors on the Board.
- Never create a closed circuit across IC pins with a metal tool.
- When it is absolutely necessary to touch the ICs and other electrical components on the Board, be sure to ground your body.

1151SBD0103A

1-3. HANDLING OF THE PC DRUM

During Transportation/Storage:

- Use the specified carton whenever moving or storing the PC Drum.
- The storage temperature is in the range between –20°C and +40°C.
- In summer, avoid leaving the PC Drum in a car for a long time.

Handling:

- Ensure that the correct PC Drum is used.
- Whenever the PC Drum has been removed from the copier, store it in its container or protect it with a Drum Cloth.
- The PC Drum exhibits greatest light fatigue after being exposed to strong light over an extended period of time. Never, therefore, expose it to direct sunlight.
- Use care not to contaminate the surface of the PC Drum with oil-base solvent, fingerprints, and other foreign matter.
- Do not scratch the surface of the PC Drum.
- Do not apply chemicals to the surface of the PC Drum.
- Do not attempt to wipe clean the surface of the PC Drum.

If, however, the surface is contaminated with fingerprints, clean it using the following procedure.

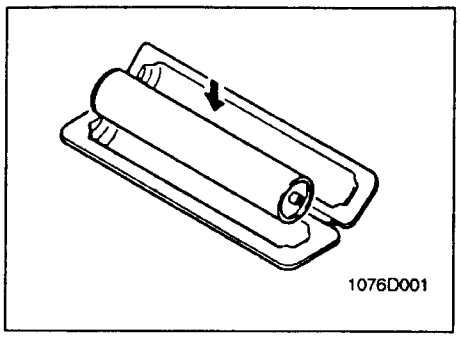

1. Place the PC Drum into one half of its container.

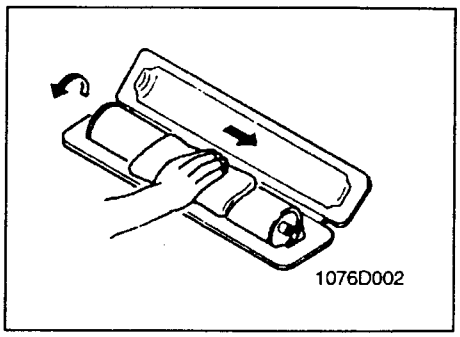

2. Gently wipe the residual toner off the surface of the PC Drum with a dry, Dust-Free Cotton Pad.
   a) Rotate the PC Drum so that the area of its surface on which the line of toner left by the Cleaning Blade is present is facing straight up. Wipe the surface in one continuous movement from the rear edge of the PC Drum to the front edge and off the surface of the PC Drum.
   b) Rotate the PC Drum slightly and wipe the newly exposed surface area with a CLEAN face of the Dust-Free Cotton Pad. Repeat this procedure until the entire surface of the PC Drum has been thoroughly cleaned.

   * At this time, always use a CLEAN face of the dry Dust-Free Cotton Pad until no toner is evident on the face of the Pad after wiping.

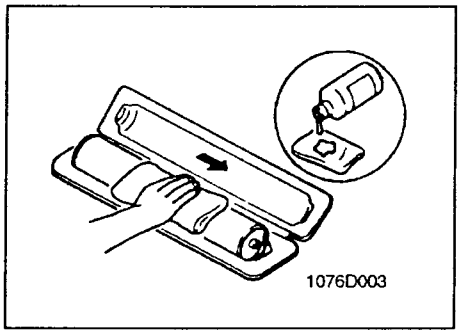

3. Soak a small amount of either ethyl alcohol or isopropyl alcohol into a clean, unused Dust-Free Cotton Pad which has been folded over into quarters. Now, wipe the surface of the PC Drum in one continuous movement from its rear edge to its front edge and off its surface one to two times.

   * Never move the Pad back and forth.

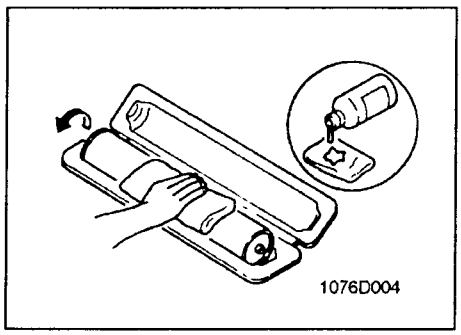

4. Using the SAME face of the Pad, repeat the procedure explained in the latter half of step 3 until the entire surface of the PC Drum has been wiped. Always OVERLAP the areas when wiping. Two complete turns of the PC Drum would be appropriate for cleaning.

NOTES

- *The Organic Photoconductor Drum is softer than CdS and Selenium Drums and is therefore susceptible to scratches.*
- *Even when the PC Drum is only locally dirtied, wipe the entire surface.*
- *Do not expose the PC Drum to direct sunlight. Clean it as quickly as possible even under interior illumination.*
- *If dirt remains after cleaning, repeat the entire procedure from the beginning one more time.*

1159SBD0104A

1-4. PARTS WHICH MUST NOT BE TOUCHED

(1) Screws

Purpose of Application of Red Paint

Red paint is applied to the screws which cannot be readjusted, set, or reinstalled in the field.
The basic rule is not to remove or loosen the screws to which red paint is applied. In addition, be advised that, if two or more screws are designated as those which must not be touched on a single part, only one representative screw may be marked with red paint.

(2) Variable Resistors on Board

Do not turn the variable resistors on boards for which no adjusting instructions are given in "ADJUSTMENT."

2 DISASSEMBLY/REASSEMBLY

1159SBD0201A

2-1. DOORS, COVERS, AND EXTERIOR PARTS: IDENTIFICATION AND REMOVAL PROCEDURES

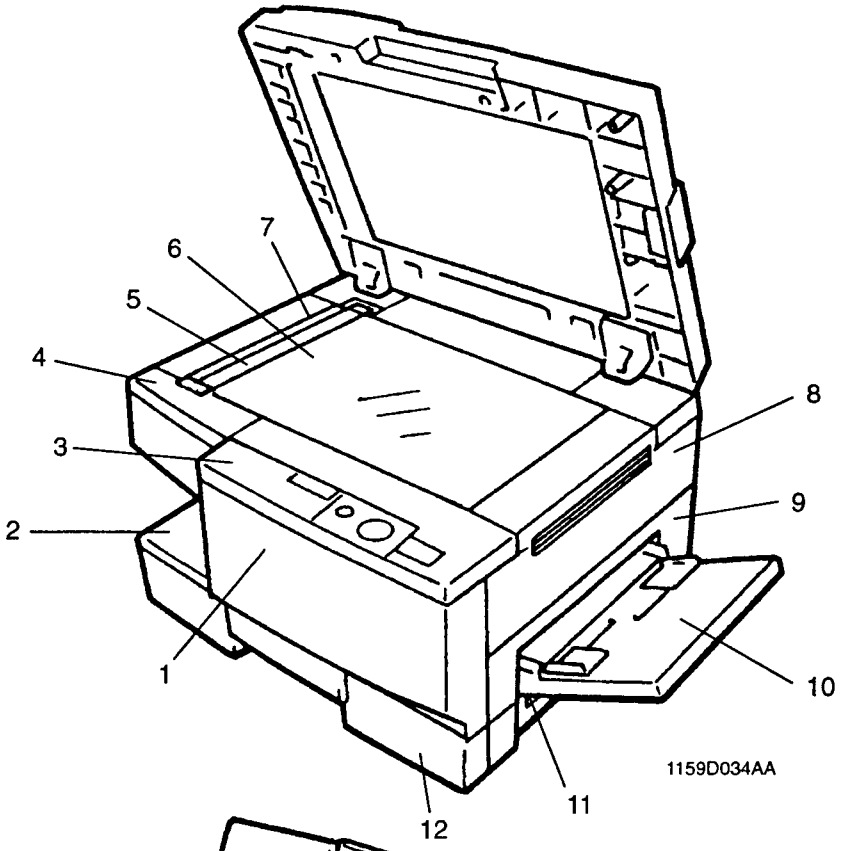

1159D034AA

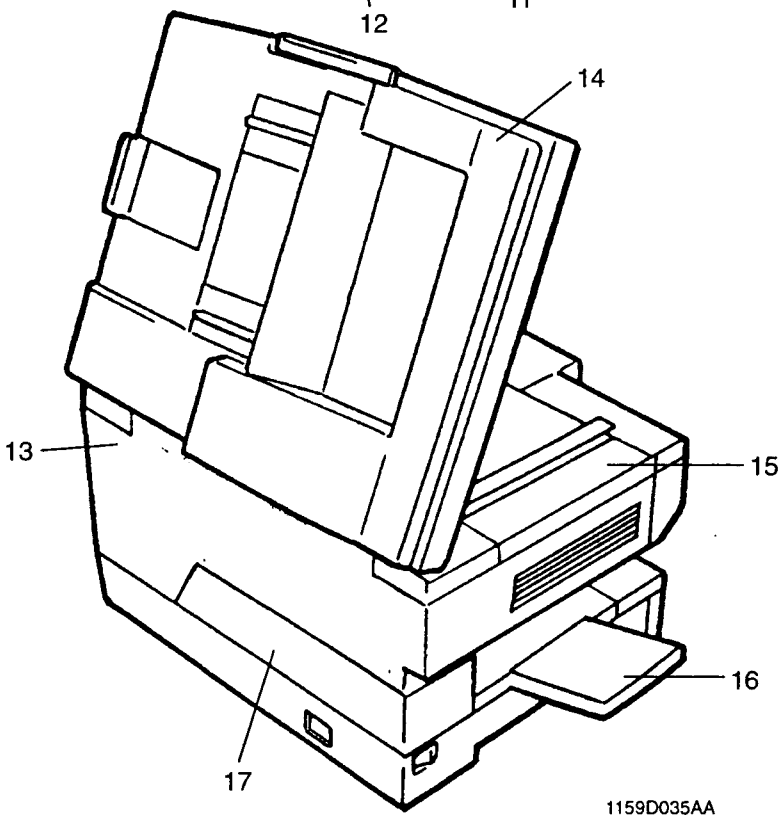

1159D035AA

No.	Parts Name	Removal Procedure
1	Front Door	Swing down No. 1. → Open Front door to the right and remove from the right side.
2	Middle Front Cover	Pull out No. 12. → Swing down No. 1. → Release and swing up the Upper Half of the copier. → Remove two screws that secure the Middle Front Cover.
3	Control Panel	Remove two screws that secure the Control Panel.
4	Upper Front Left Cover	Swing down No. 1. → Release and swing up the Upper Half of the copier. → Remove No. 15. → Remove two screws that secure the Upper Front Left Cover.
5	Original Scales	Swing down No. 1. → Release and swing up the Upper Half of the copier. → Remove No. 15. → Remove No. 4. → Remove two screws that secure the Original width Scales.
6	Original Glass	
7	SDH Glass (*1)	
8	Upper Right Cover	Remove two screws that secure the Upper Right Cover.
9	Middle Right Cover	Swing down No. 1. → Remove No. 11. → Remove two screws that secure the Middle Right Cover.
10	Manual Bypass Table	Remove two screws that secure the Manual Bypass Table.
11	Right Door	<EP1031/EP1031F> Open No. 11. → Remove No. 9. → Remove two screws that secure the Right Door.
		<EP1030/EP1030F> Remove No. 9. → Remove two screws that secure the Right Door.
12	Pape Feed Cabinet	Pull out the Paper Feed Cabinet
13	Rear Cover	Swing down No. 1. → Release and swing up the Upper Half of the copier. → Remove two screws that secure the Upper Rear Cover.
14	SDH (*1)	See p. D-34.
	Original Cover (*2)	Open the Original Cover → Remove the Hinge.
15	Upper Left Cover	Swing down No. 1. → Release and swing up the Upper Half of the copier. → Remove four screws that secure the Upper Left Cover.
16	Exit Cover	Remove No. 17.
17	Middle Rear Left Cover	Swing down No. 1. → Release and swing up the Upper Half of the copier. → Remove three screws that secure the Middle Rear Left Cover.

*1 : EP1030F/EP1031F only
*2 : EP1030/EP1031 only

1159SBD0202A

2-2. REMOVAL OF PWBs

- When removing a circuit board, refer to "PRECAUTIONS FOR HANDLING THE PWBs" contained in SWITCHES ON PWBs and follow the corresponding removal procedures given on the next page.
- Replacement of a circuit board may call for readjustment or resetting of particular items.
- The removal procedures given on the next page omit the removal of connectors and screws securing the circuit board support or circuit board.
- Where it is absolutely necessary to touch the ICs and other electrical components on the board, be sure to ground your body.

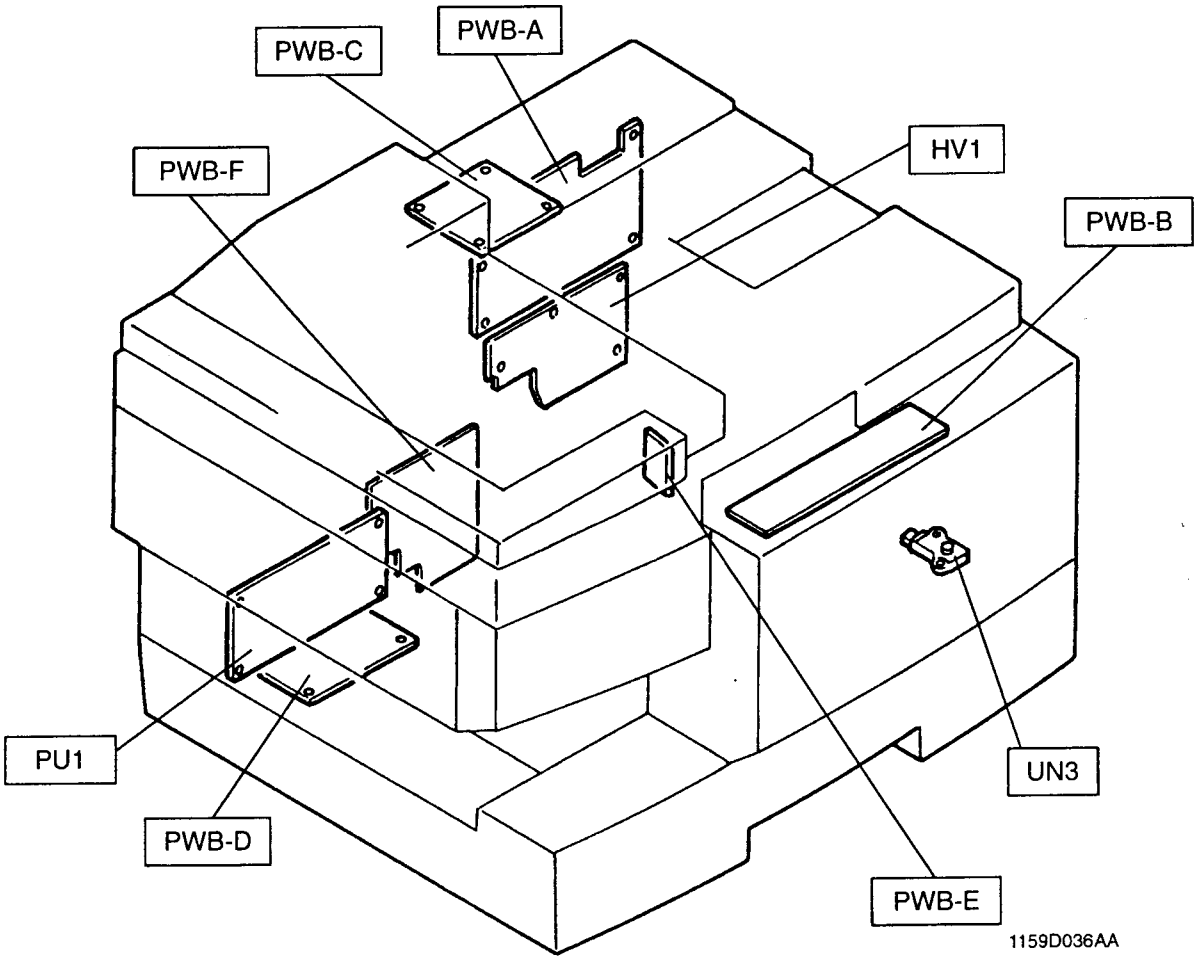

Symbol	Parts Name	Removal Procedure
PWB-A	Master Board	Swing down No. 1. → Release and swing up the Upper Half of the copier. → Remove No. 13.
PWB-B	MSC Board	Remove No. 3.
PWB-C	SDH Board (*1)	Remove No. 14. → Remove the SDH Lower Rear Cover. → Remove the Mat. → Remove the SDH Front Rear Cover. → Remove the SDH PWB Mounting Bracket Assy.
PWB-D	Noise Filter Board	Swing down No. 1. → Release and swing up the Upper Half of the copier. → Remove No. 17. → Remove the Power Supply Unit Mounting Bracket Assy. → Remove the AVR Mounting Bracket Assy.
PWB-E	AE Sensor Board	Swing down No. 1. → Release and swing up the Upper Half of the copier. → Remove No. 15. → Remove No. 5, 6, and 7. → Remove the AE Sensor Board Mounting Bracket Assy.
PWB-F	AVR	Swing down No. 1. → Release and swing up the Upper Half of the copier. → Remove No. 17. → Remove the Contact Plate.
PU1	Power Supply Unit	Swing down No. 1. → Release and swing up the Upper Half of the copier. → Remove No. 17. *NOTE: Never replace individual parts within the Power Supply when repairing it. Always replace the entire Power Supply Unit.*
HV1	Hight Voltage Unit	Swing down No. 1. → Release and swing up the Upper Half of the copier. → Remove No. 13.
UN3	ATDC Sensor	———

*1 : EP1030F/EP1031F only

1159SBD0203A

2-3. PAPER TAKE-UP/TRANSPORT SECTION

(1) Removal of the Paper Take-Up Roll and Separator Roll Assy

1. Remove two screws and the Upper Right Cover.
2. Remove two screws and the Middle Right Cover.
3. Remove one screw and the Right Door.
4. Pull out the Paper Feed Cabinet.
5. Swing down the Front Door.
6. Release and swing up the Upper Half of the copier.
7. Remove three screws and the Rear Cover.

<USA, Canada>

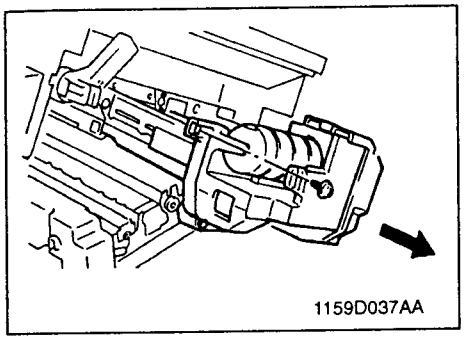

8. Remove one screw and the Imaging Unit from the copier.

<Except USA, Canada>

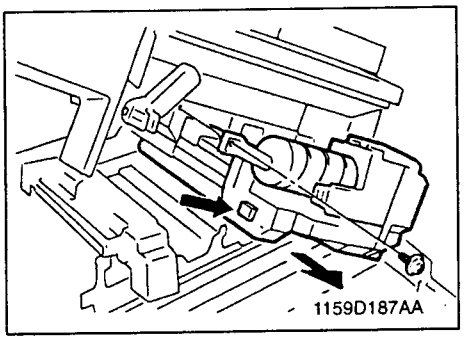

8. Push the lock lever and remove the IU.

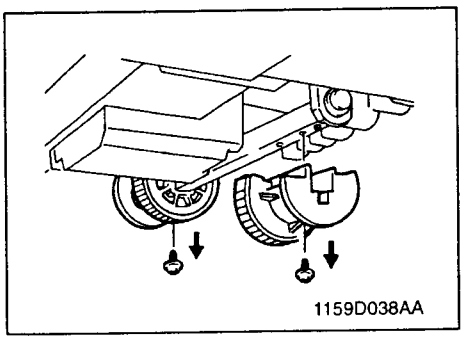

9. Remove each of the two screws and the Paper Take-Up Roller.

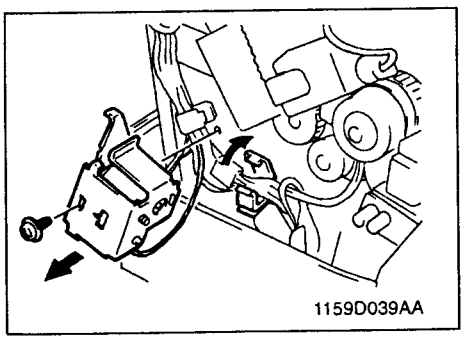

10. Open the Cord Clamp.
11. Remove one screw and the Multi Bypass Paper Take-Up Solenoid Assy. (EP1031/EP1031F Only)

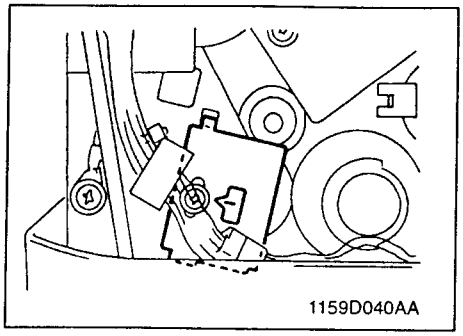

NOTE

When reinstalling the Multi Bypass Paper Take-Up Solenoid Assy, make sure that the marking-off line is aligned with the triangle of the hole.

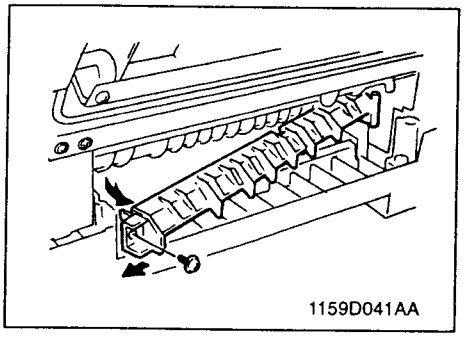

12. Remove one screw and the Gide Plate.

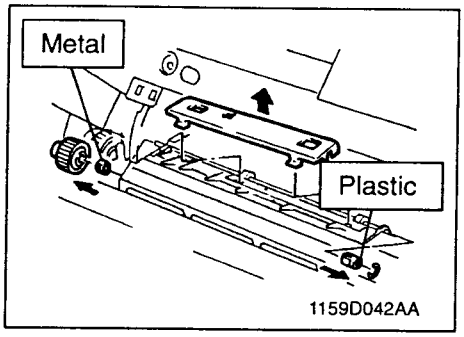

13. Remove the Separator Roller Guide Plate.
14. Remove the Rear Gear.
15. Snap off the one E-ring to remove the front and rear Bushings.

NOTE

When reassembling the bushing, make sure not to mistake the front and rear components.
The front is plastic and the rear is metal.

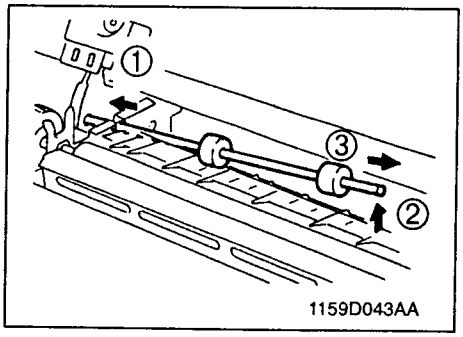

16. Move the Separator Roller to the rear and, as shown in by the sequence in the illustration to the left, remove it from the front.

(2) Cleaning of the Paper Take-Up Rolls

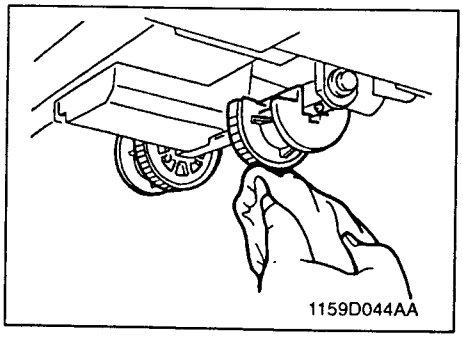

1. Pull out the Paper Feed Cabinet.
2. Using a soft cloth dampened with alcohol, wipe clean the two Paper Take-Up Rolls.

(3) Cleaning of the Separator Rolls

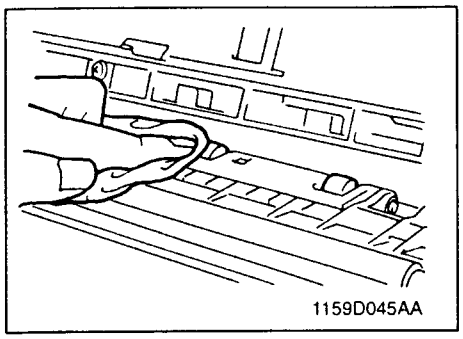

1. Swing down the Front Door.
2. Release and swing up the Upper Half of the copier.
3. Remove one screw and the Imaging Unit from the copier.
4. Using a soft cloth dampened with alcohol, wipe clean the two Separator Rolls.

(4) Removal of the Synchronizing Roller

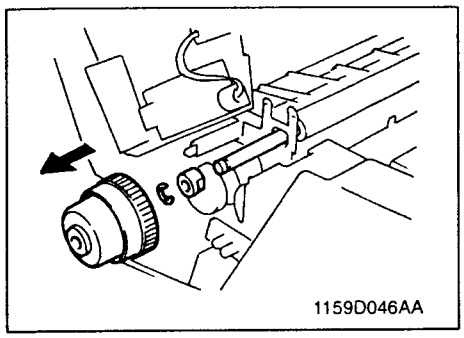

1. Swing down the Front Door.
2. Release and swing up the Upper Half of the copier.
3. Remove the Imaging Unit from the copier.
4. Remove three screws and the Rear Cover.
5. Snap off the one E-ring to remove the Timing Clutch.
6. Snap off the one E-ring to remove the Rear Bushing.

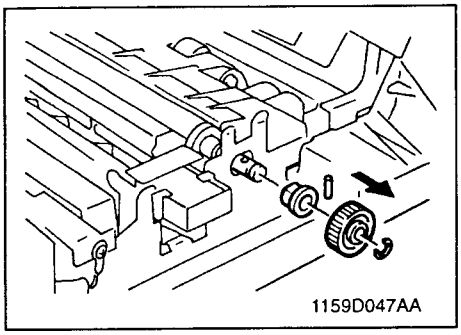

7. Snap off the one E-ring to remove the Gear.
8. Remove the front Bushing.

NOTE

Use care not to loose the Set Pin when removing the Gear.

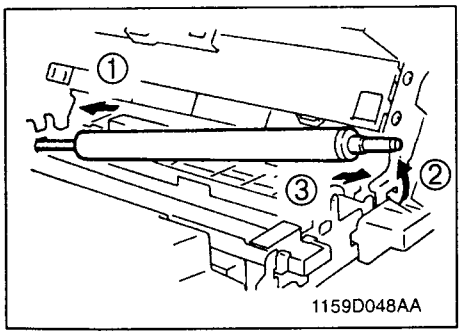

9. Move the Timing Roller to the rear and, as shown in the illustration to the left, remove it from the front.

(5) Cleaning of the Synchronizing Roller

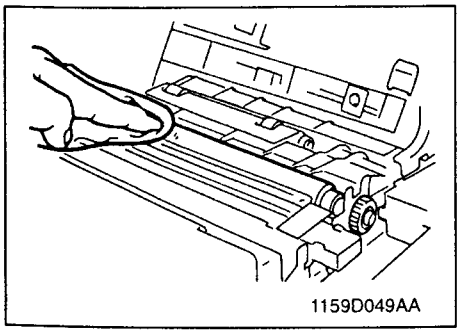

1. Swing down the Front Door.
2. Release and swing up the Upper Half of the copier.
3. Using a soft cloth dampened with alcohol, wipe clean the Synchronizing Roller.

(6) Cleaning of the Multi Bypass Feed Roller (EP1031/EP1031F Only)

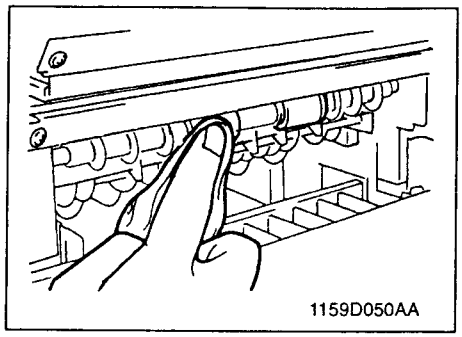

1. Open the Right Door.
2. Using a soft cloth dampened with alcohol, wipe clean the two Multi Bypass Paper Feed Rollers.

2-4. OPTICAL SECTION

(1) Cleaning of the Original Grass

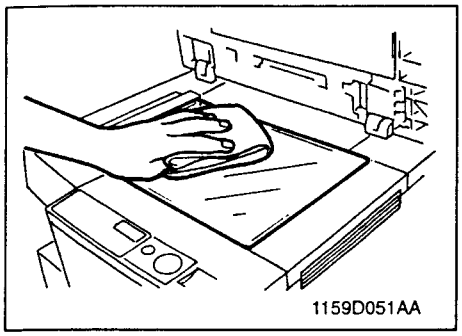

1. Wipe clean the Original Glass with a soft cloth.

(2) Cleaning of the Scanner Rail and Bush

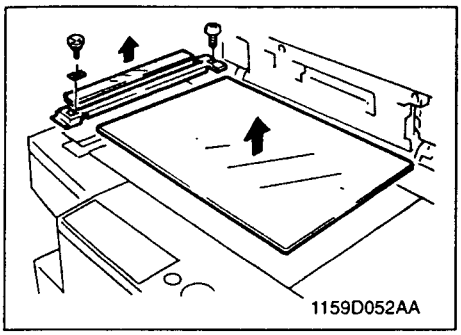

1. Swing down the Front Door.
2. Release and swing up the Upper Half of the copier.
3. Remove four screws and the Upper Left Cover.
4. Remove two screws and the Original Width Scale.
5. Remove the SDH Glass. (EP1030F/EP1031F Only)
6. Remove the Original Glass.

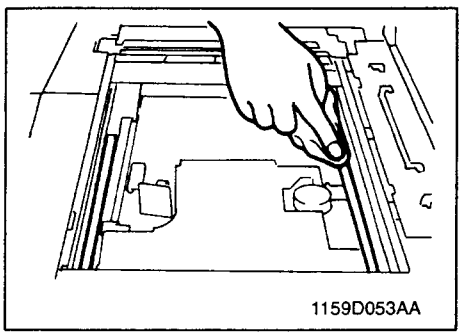

7. Wipe clean the Scanner Rail and Bush with a soft cloth.

> ***NOTE***
> *Be sure to apply lubricating oil after the Scanner Rail and Brush have been cleaned.*

(3) Cleaning of the Exposure Lamp

1. Swing down the Front Door.
2. Release and swing up the Upper Half of the copier.
3. Remove four screws and the Upper Left Cover.
4. Remove one screw and the Upper Front Left Cover.
5. Swing down and lock the Upper Half of the copier.
6. Remove two screws and the Original Width Scale.
7. Remove the SDH Glass. (EP1030F/EP1031F Only)
8. Remove the Original Glass.

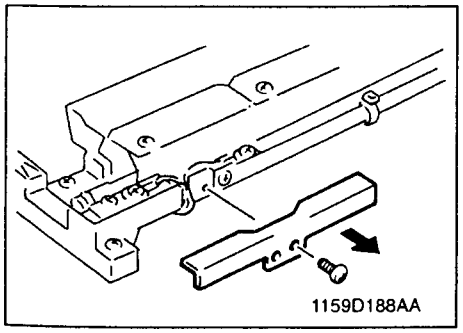

9. Remove one screw and front terminal cover.

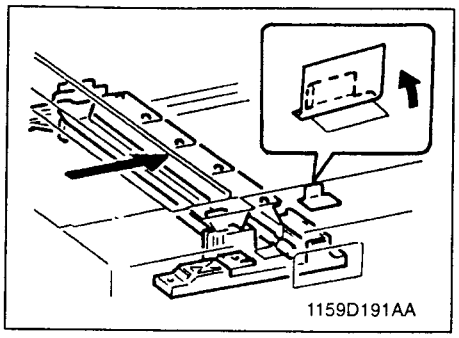

10. Move the Scanner to the position shown on the left and peel the seal partly off the copier frame.

> **NOTE**
> *Do not peel the seal completely off the frame. After the cleaning steps have been completed, affix it back again.*

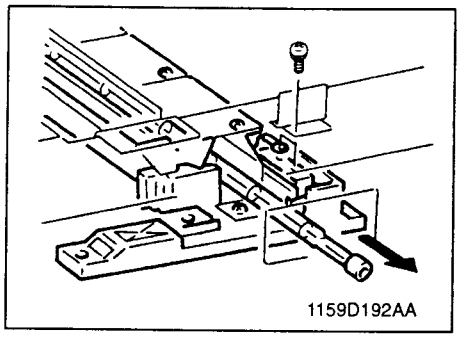

11. Remove one screw and front Scanner Harness.
12. Remove one screw and the Exposure Lamp Terminal.
13. Slide out the Exposure Lamp.

> **NOTE**
> *When the Exposure Lamp has been cleaned or replaced, be sure to make the "adjustment of optimum exposure setting in the Manual Exposure mode." (See p.D-44) and "adjustment of exposure Level in the Auto Exposure mode." (See p.D-46)*

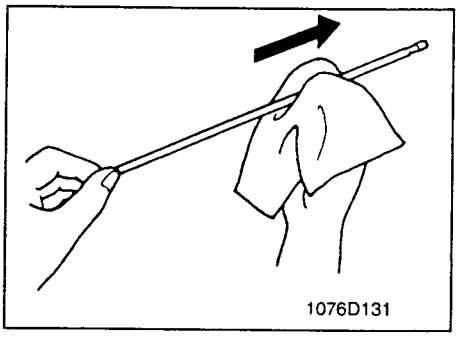

14. Using a soft cloth dampened with alcohol, crean the lamp by gently wiping its surface in one direction.

> **NOTE**
> *When reinstalling the lamp, point the protruding navel of the lamp toward the opening in the Lamp Reflector so that the protruding navel will not hit against the Lamp Reflector.*

(4) Removal of the Thermal Fuse

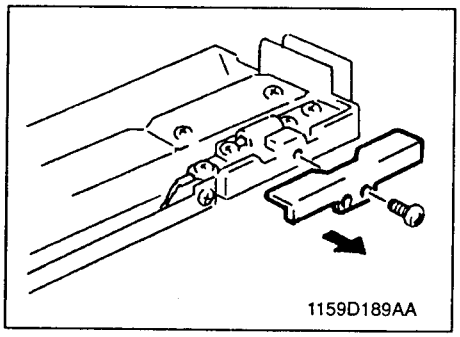

1. Remove one screw and rear terminal cover.

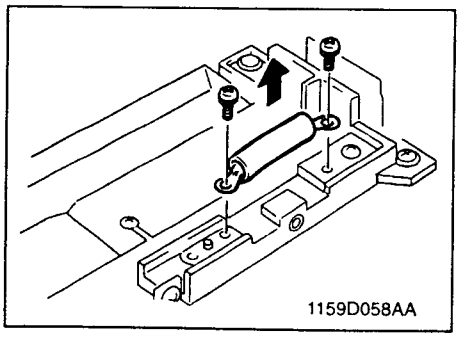

2. Remove two screws and the Thermal Fuse.

(5) Cleaning of the 1st, 2nd, and 3rd Mirrors

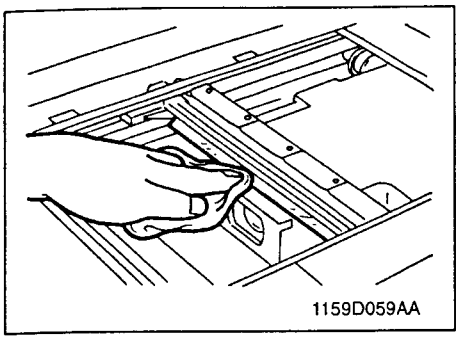

1. Wipe clean the 1st Mirror with a soft cloth.

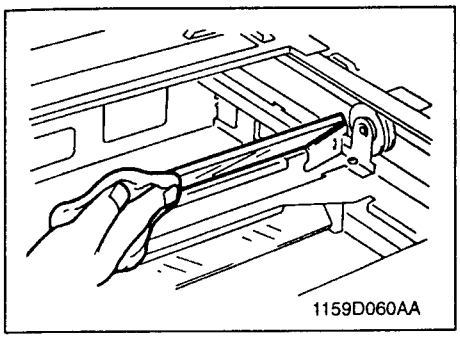

2. Wipe clean the 2nd Mirror with a soft cloth.

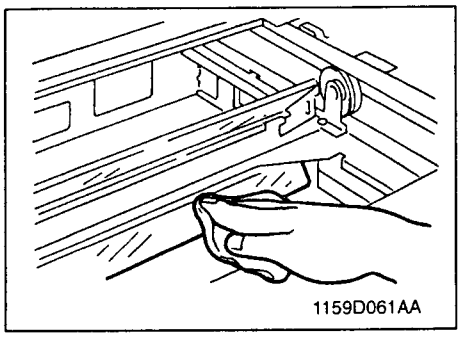

3. Wipe clean the 3rd Mirror with a soft cloth.

(6) Cleaning of the Lens and 4th and 5th Mirrors

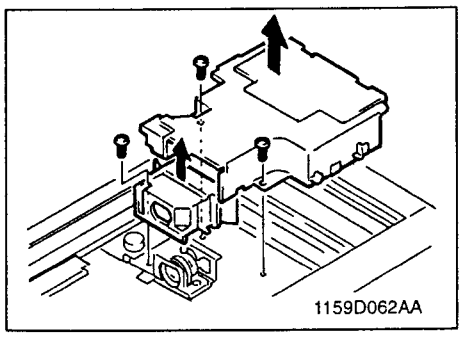

1. Remove the Original Glass.
2. Remove two screws and the Optical Cover.
3. Remove two screws and the Lens Cover.

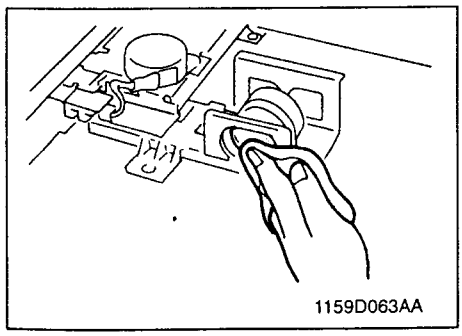

4. Gently dust off the surface of the Lens using a soft cloth.

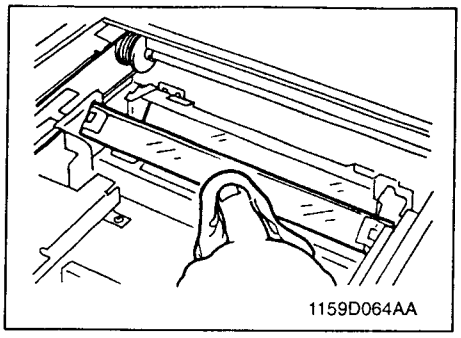

5. Wipe clean the 4th and 5th Mirrors with a soft cloth.

(7) Cleaning of the Cooling Fan Filter

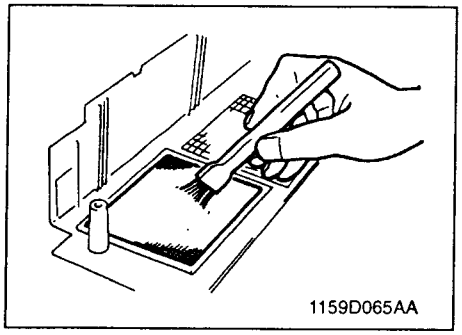

1. Swing down the Front Door.
2. Release and swing up the Upper Half of the copier.
3. Remove three screws and the Rear Cover.
4. Clean the Cooling Fan Filter using a brush or a vacuum cleaner.

(8) Removal Scanner Drive Motor M4

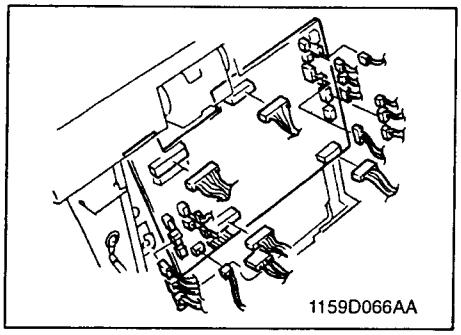

1. Remove the Upper Right Cover.
2. Swing down the Front Door.
3. Release and swing up the Upper Half of the copier.
4. Remove three screws and the Rear Cover.
5. Remove the 17 connectors from the PWB-A.

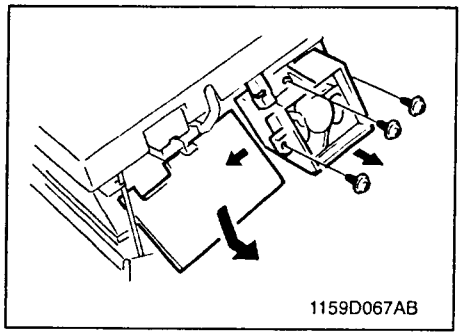

6. Remove the PWB-A.
7. Remove the three screws and the Ozone Fan Motor Assy.

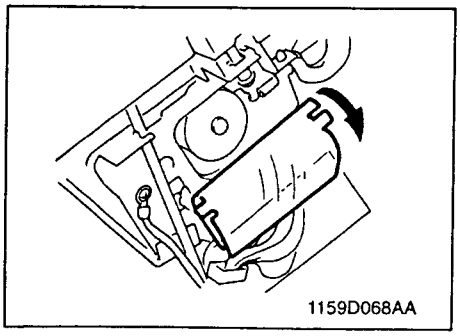

8. Free the Mylar.

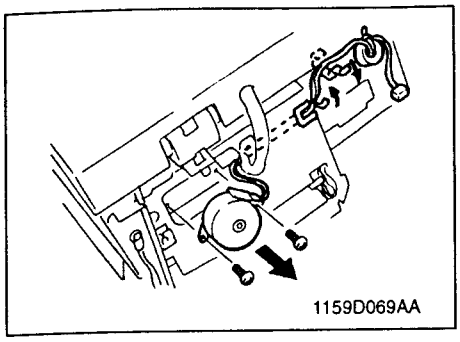

9. Remove the Harness for the Scanner Drive Motor from the Locking Edge Cover and remove it from the Cord Clamp.
10. Remove two screws and the Scanner Drive Motor M4.

(9) Removal of the Scanner Drive Cable

1. Swing down the Front Door.
2. Release and swing up the Upper Half of the copier.
3. Remove the Imaging Unit from the copier.
4. Remove the Upper Left Cover, Upper Front Left Cover and Rear Cover.
5. Swing down and lock the Upper Half of the copier.
6. Remove the Original Scale and Original Glass.
7. Remove the SDH Glass. (EP1030F/EP1031F Only)
8. Remove the Upper Right Cover.

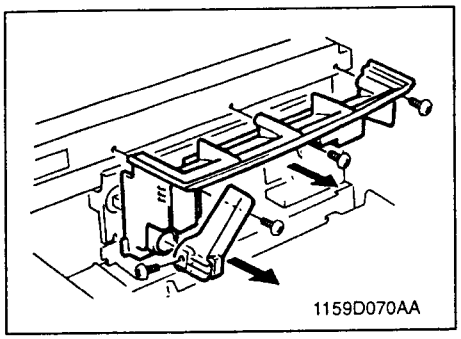

9. Remove the two screws and one connector and the Control Panel.
10. Remove the one screw and the Upper Unit Release Lever.
11. Remove the three screws and the Lower Panel Cover.

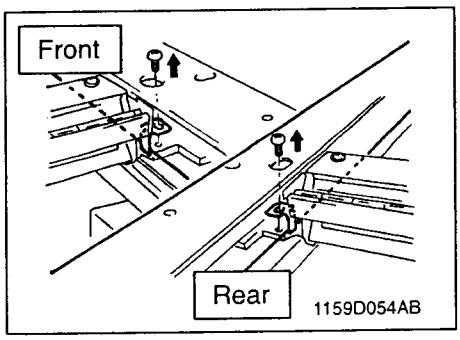

12. Move the Scanner to the center and remove the one screw and the front and rear Scanner Mounting Brackets.

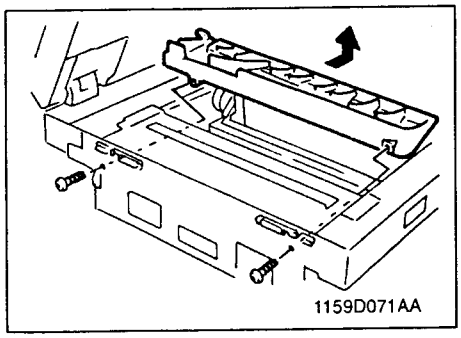

13. Remove the two screws and the Optical Section Cooling Duct.

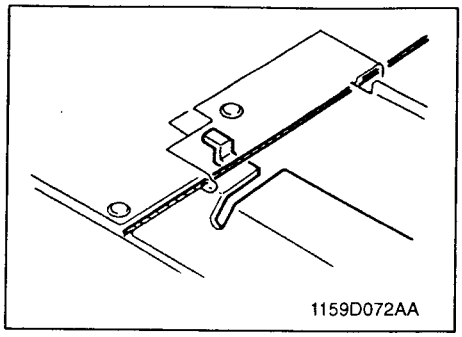

NOTE

When reassembling the Optical Section Cooling Duct, make sure the Rear Wire is retained as shown in the illustration.

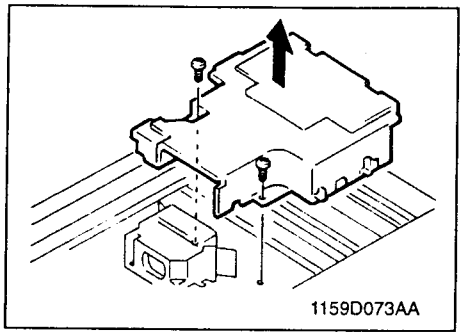

14. Remove two screws and the Optical Cover.

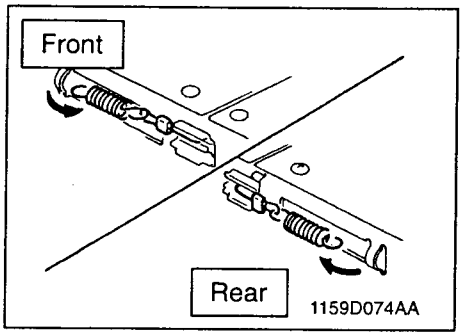

15. Unhook each of the two springs at the front and rear and remove the cable.

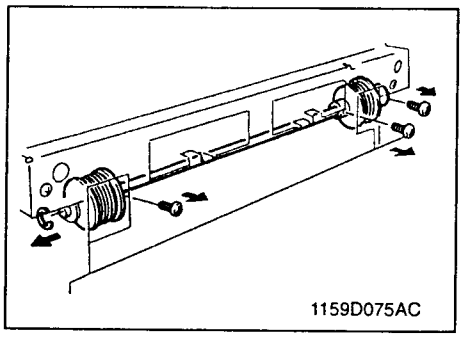

16. Snap off the one E-ring from the Pulley Shaft.
17. Remove the one screw from the Drive Belt Pulley.
18. Remove each screw from the front and rear Cable Drive Pulleys.

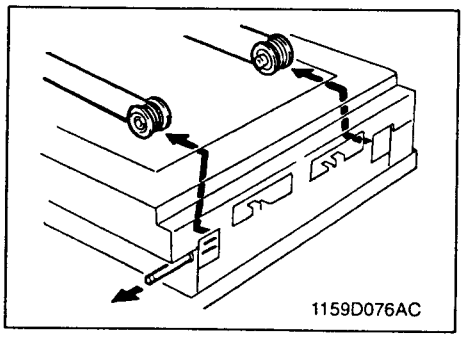

19. Remove the Pulley Shaft.
20. Remove the Cable Drive Pulley.

(10) Winding of the Scanner Drive Cable

◆ **Remark**

Whenever Scanner Drive Cable has been rewound, be sure to make the "Adjustment of the Scanner/Mirrors Carriage Position." See p.D-67.

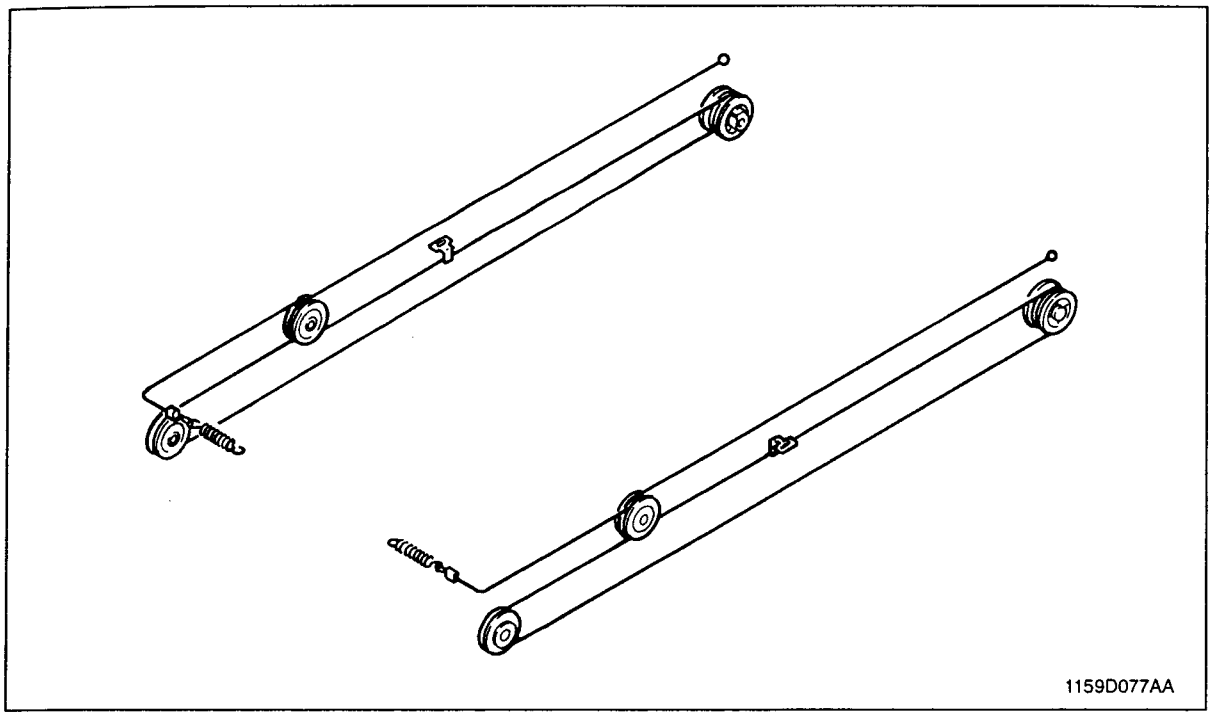

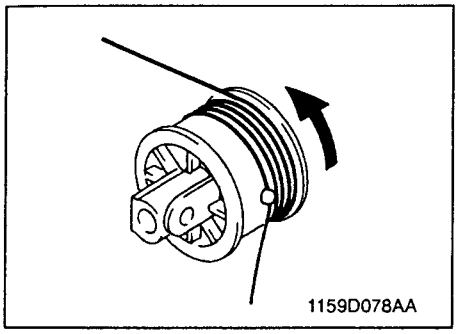

1. From the bead on the rear pulley, wrap the shorter of the Cable counterclockwise four times towards the rear.

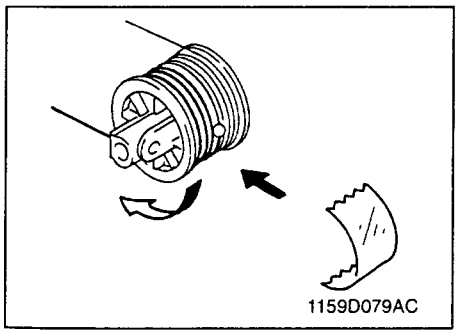

2. Wrap the longer of the Cable clockwise three times towards the front and secure with the Tape.

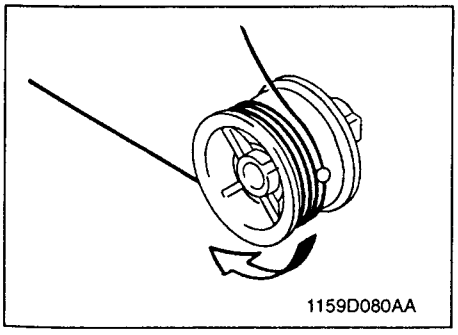

3. From the bead on the front pulley, wrap the longer of the Cable in clockwise three times towards the front.

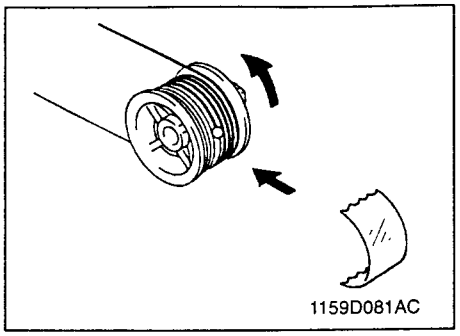

4. Wrap the shorter of the Cable in counterclockwise four times towards the rear and secure with the Tape.

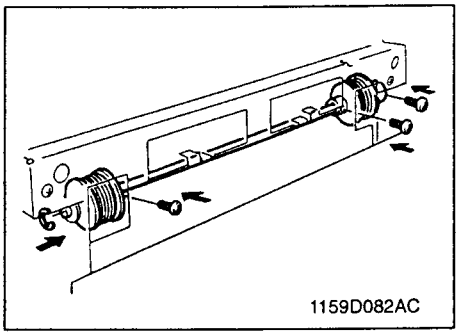

5. Mount the front and rear Cable Drive Pulleys, Drive Belt Pulley and Pulley Shaft.
6. Install the three set screws to the front and rear Cable Drive Pulleys and the Drive Belt Pulley and mount the one E-ring to the Pulley Shaft.

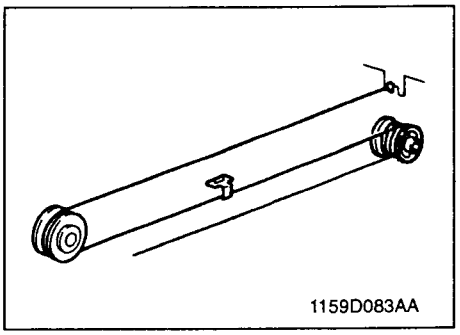

7. Wrap the shorter of the two Cable in the rear around Pulley B and secure it to the frame.

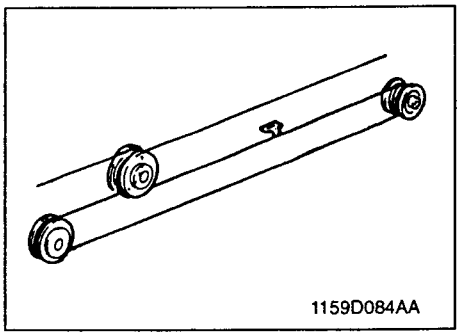

8. Pull the longer of the two Cable and wrap it around Pulleys A and B.

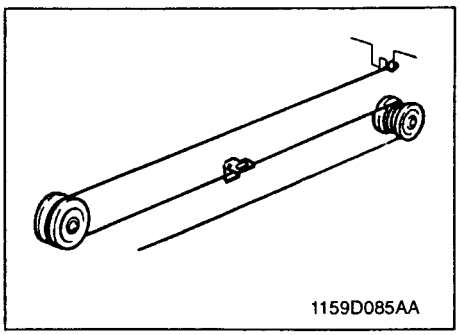

9. Wrap the shorter of the two Cable in the front around Pulley B and secure it to the frame.

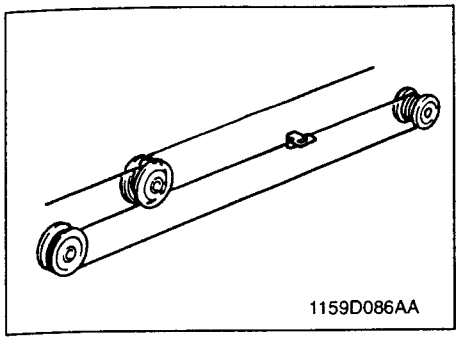

10. Pull the longer of the two Cable and wrap it around Pulleys A and B.

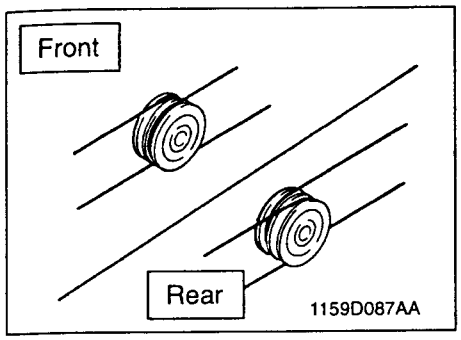

NOTE

- *The longer Cable is wrapped around the outside of Pulley B.*
- *The shorter Cable is wrapped around the inside of Pulley B.*

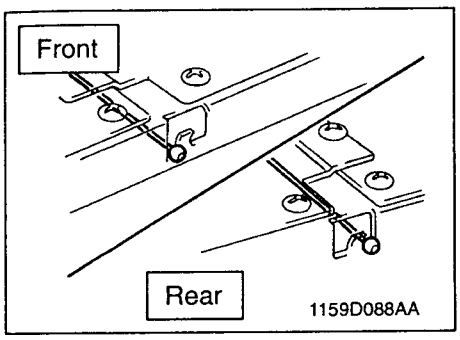

NOTE

Set the Rounded Tip as shown in the illustration to the left.

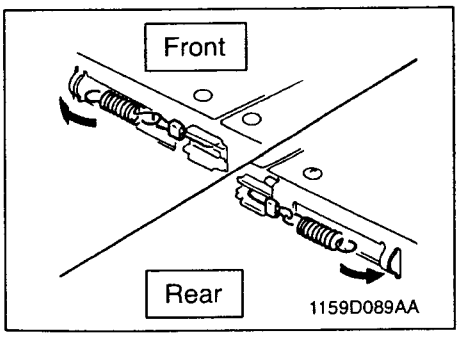

11. Set the front and rear Cable in the groove for the Cable Guide and attach to the Spring.
12. Peel tape off the Cable Drive Pulleys.

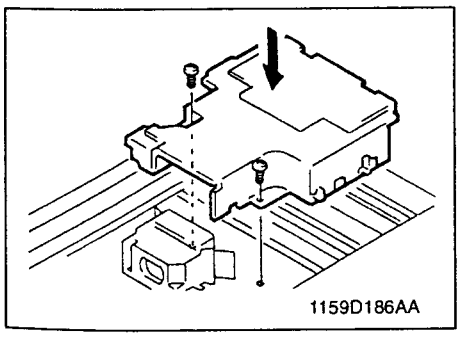

13. Secure the Optical Cover with two screws.

2-5. IMAGING UNIT

(1) Removal of the Imaging Unit

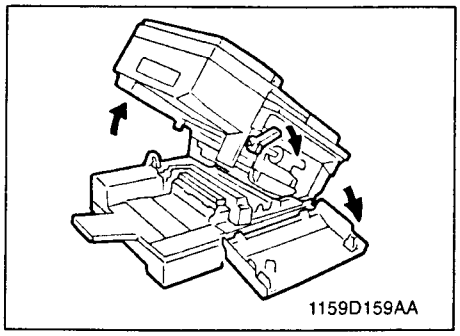

1. Swing down the Front Door.
2. Release and swing up the Upper Half of the copier.

<USA, Canada>

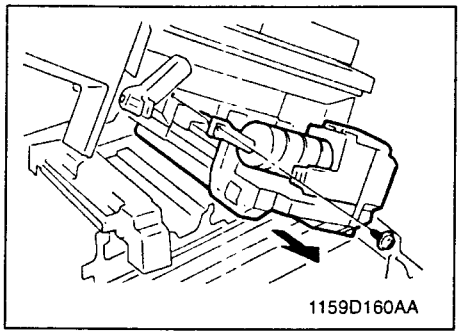

3. Remove one screw and the Imaging Unit from the copier.

<Except USA, Canada>

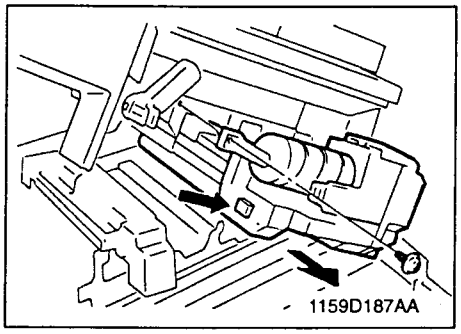

3. Push the lock lever and remove the IU.

(2) Replacement of the PC Drum

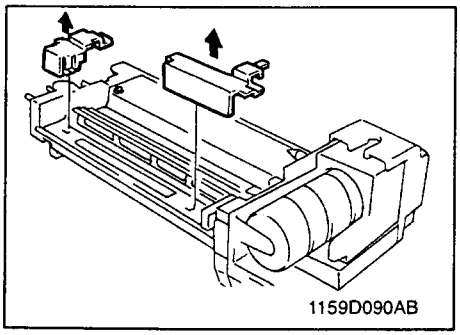

1. Remove the two Covers.

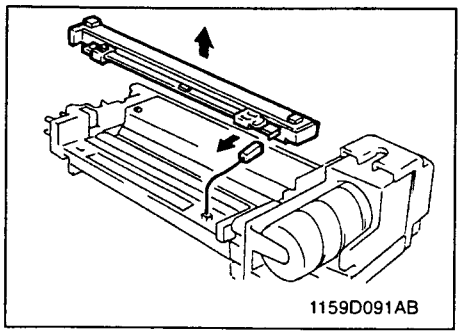

2. Remove the Connectors for the Ground-Shielded Harness.
3. Remove the Drum Charge Corona.

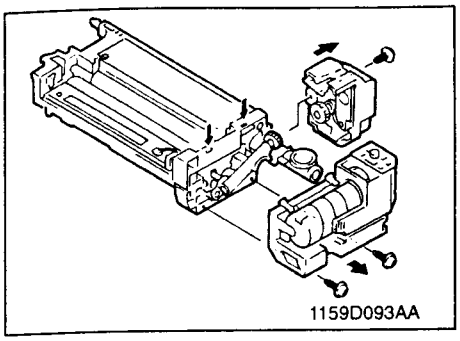

4. Remove the three screws and the Hopper Unit.

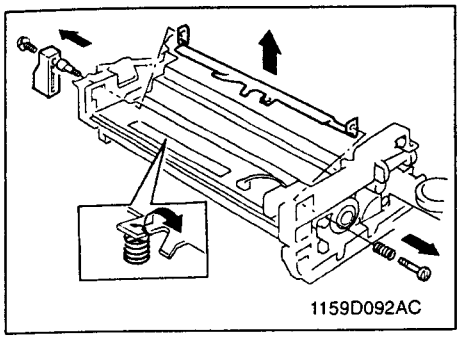

5. Remove two shoulder screws and the Cleaning Blade.

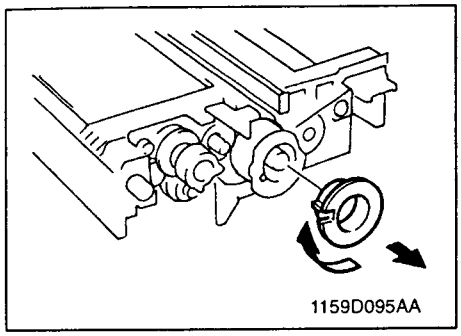

6. Turn the Bushing in the direction of the arrow and remove.

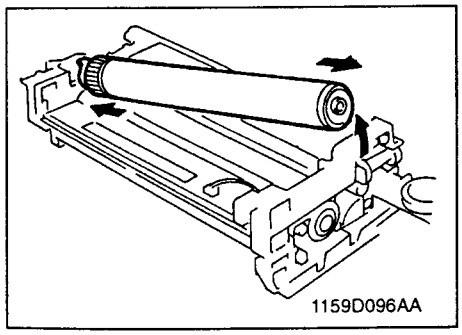

7. Push in on the rear of the PC Drum, remove it from the front and replace it.

(3) Replacement of the Cleaning Blade

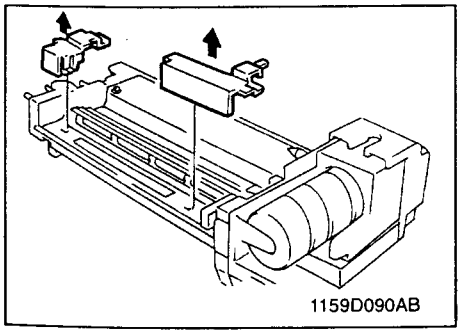

1. Remove the two Covers.

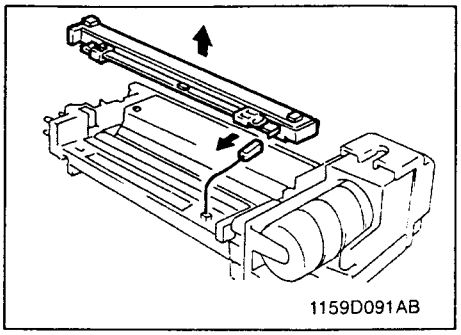

2. Remove the Ground-Shielded Harness Connector.
3. Remove the Drum Charge Corona.

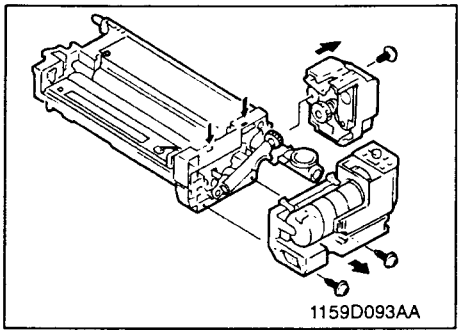

4. Remove the three screws and the Hopper Unit.

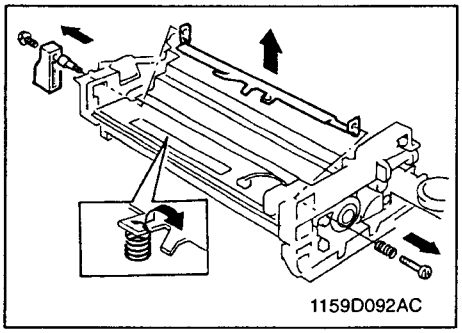

5. Remove and replace the Cleaning Blade.

(4) Replacement of the Ds Positioning Collars

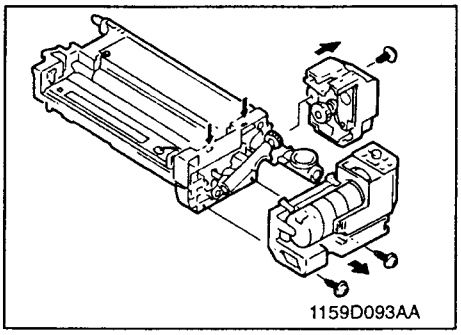

1. Remove the three screws and the Hopper Unit.

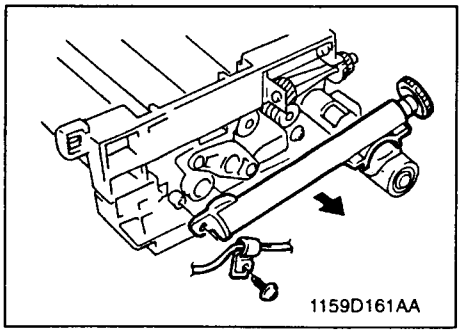

2. Remove the one screw and the Recycling Pipe.

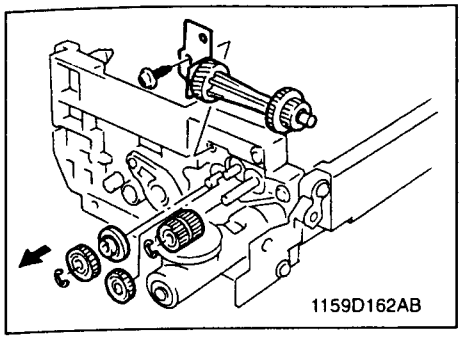

3. Snap off the two E-rings to remove the one screw and the Drive Gear.
4. Remove the front Ds Positioning Collar and replace.

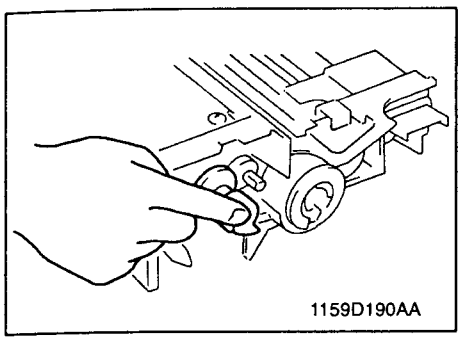

NOTE

When replacing the front Ds Positioning Collar, hold the shaft behind the Bucket Roller.

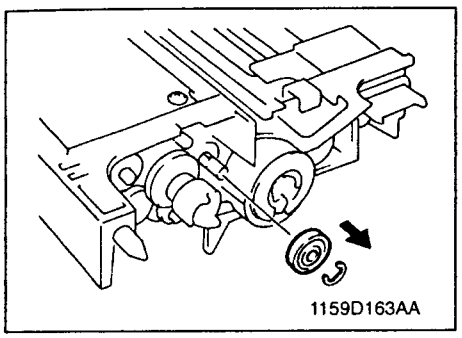

5. Snap off the one E-ring to remove the rear Ds Positioning Collar and replace.

(5) Replacement of the Starter

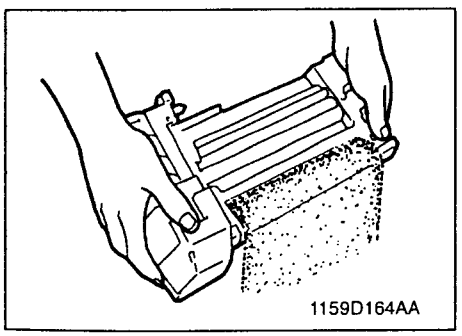

1. Damp the developer out of the Developing Unit.

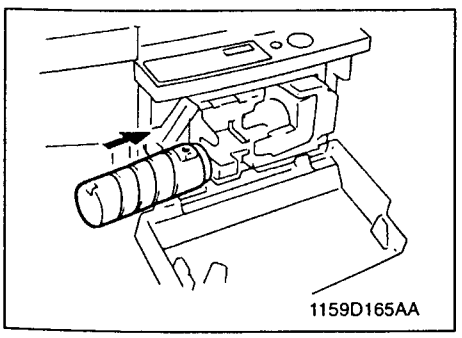

2. Set the Starter Bottle to IU and perform adjustment of the F8 ATDC Adjustment. (See p.D-46)

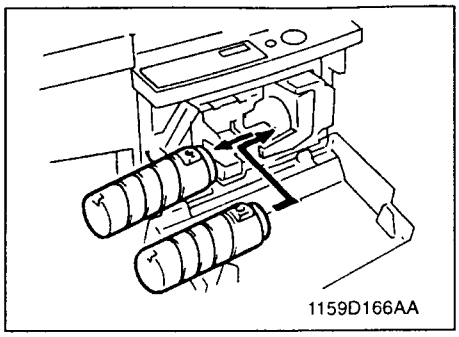

3. Remove the Starter Bottle and set the Toner Bottle.

> ***NOTE***
> *Shake the Toner Bottle before setting it in place.*

(6) Cleaning of the Toner Antispill Mylar

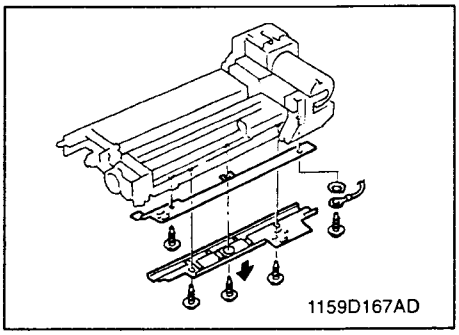

1. Remove the two screws, the Receiver Plate and the Toner Antispill Mylar.

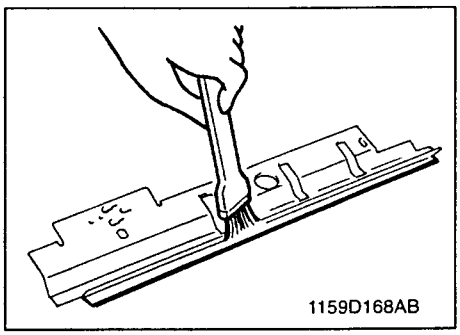

2. Using a brush, whisk dust off the Toner Antispill Mylar.

(7) Cleaning of the Toner Scattering Prevention Mylar

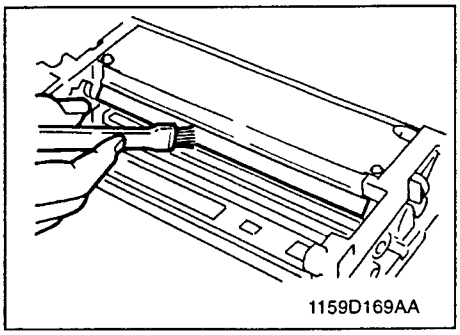

1. Using a brush, whisk dust off the Toner Scattering Prevention Mylar.

(8) Cleaning of the Paper Dust Removal Cleaner

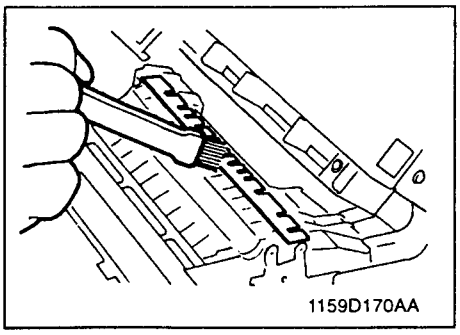

1. Remove the Timing Roller.
2. Using a brush, wihisk dust off the Paper Dust Removal Cleaner.

2-6. PC DRUM CHARGE CORONA AND IMAGE TRANSFER/ PAPER SEPARATOR CORONAS

(1) Removal of the PC Drum Charge Corona

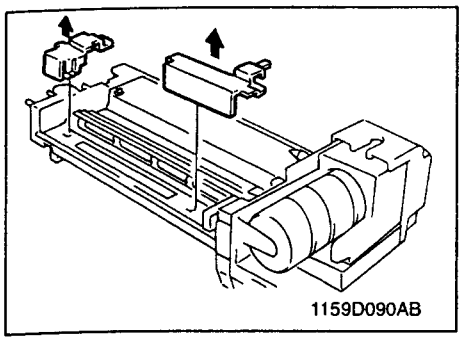

1. Remove the two Covers.

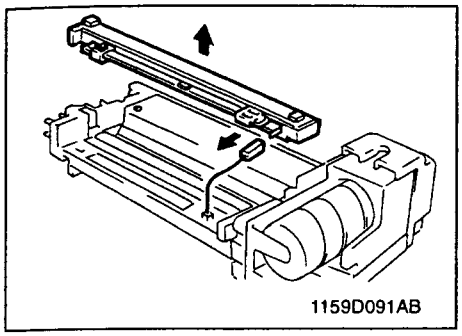

2. Remove the Ground-Shielded Harness Connector.
3. Remove the Drum Charge Corona.

(2) Cleaning of the Main Eraser

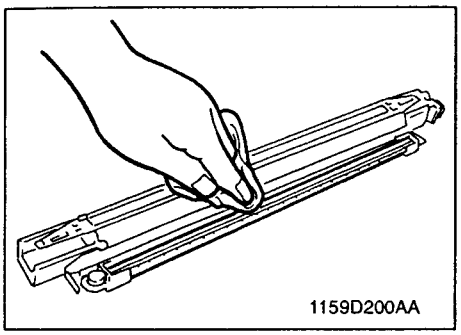

1. Using a soft cloth dampened with alcohol, clean the Main Eraser by gently wiping its surface in one direction.

(3) Cleaning of the PC Drum Charge Corona Housing

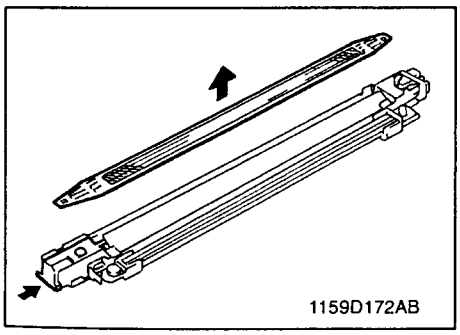

1. Press the Mesh Holder on the front of the Corona Unit in the direction of arrow to remove the Grid Mesh.

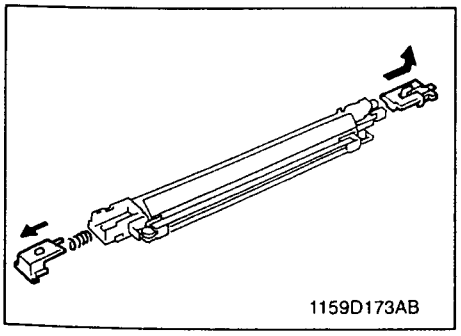

2. Remove the End Cups from the front and rear end of the Unit.

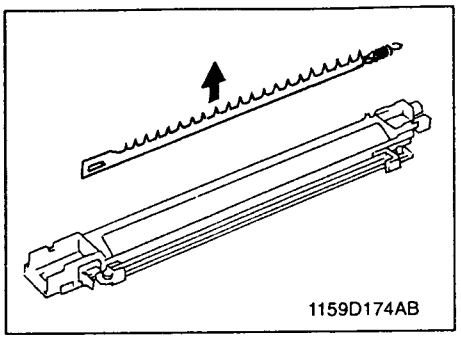

3. Remove the Comb Electrode, Drum charge Corona.

> ***NOTE***
> *Use care not to deform the Electrode. When removing it, first snap off its spring end.*

(4) Cleaning of the Comb Electrode, Drum charge Corona

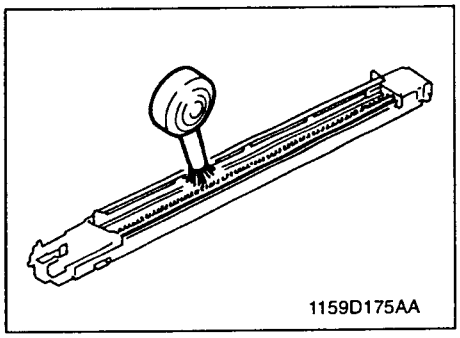

1. Use a blower brush to clean the Comb Electrode, Drum charge Corona.

> ***NOTE***
> *If the blower brush is not effective in cleaning the Comb Electrode, Drum Charge Corona use a soft cloth dampened with alcohol to clean serious contamination.*

(5) Cleaning of the PC Drum charge Corona Grid Mesh

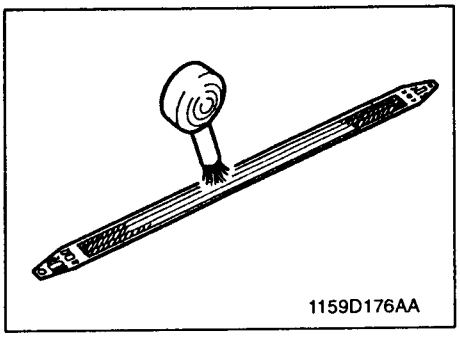

1. Blow all foreign matter off the Grid Mesh a blower brush.

> ***NOTE***
> *If the blower brush is not effective in cleaning the Grid, use a soft cloth dampened with alcohol to clean serious contamination.*

(6) Removal of the Image Transfer/Paper Separator Coronas

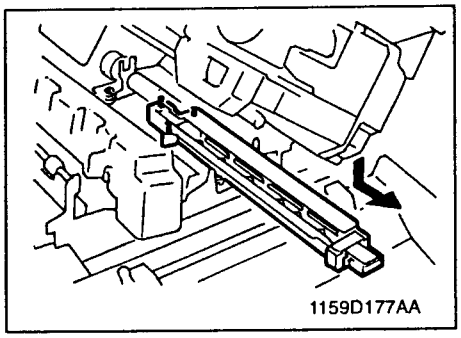

1. Swing down the Front Door.
2. Release and swing up the Upper Half of the copier.
3. Pull out the Image Transfer/Paper Separator Coronas.

(7) Cleaning of the Image Transfer/Paper Separator Coronas Housing

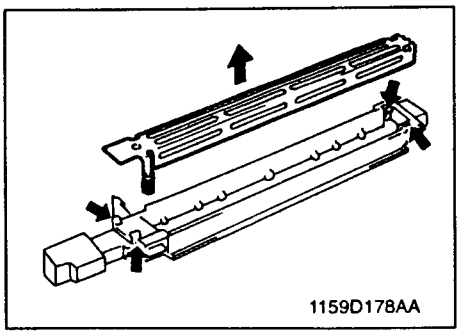

1. Remove the Image Transfer/Paper Separator Corona Housing.

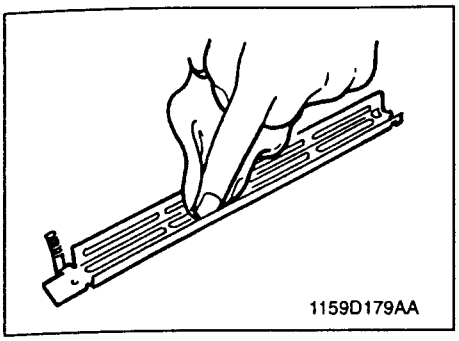

2. Using a soft cloth dampened with alcohol, wipe the housing clean of dirt.

(8) Cleaning of the Image Transfer Charge Wire

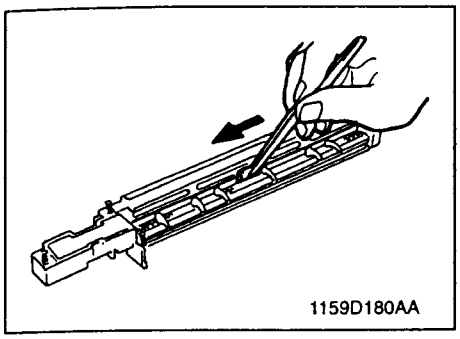

1. Clamp a soft cloth (gauze) dampened with alcohol with tweezers and clean the Charge Wire in one direction. Wipe from the Hook side to the Spring side.

(9) Cleaning of the Comb Electrode, Paper Separator Corona

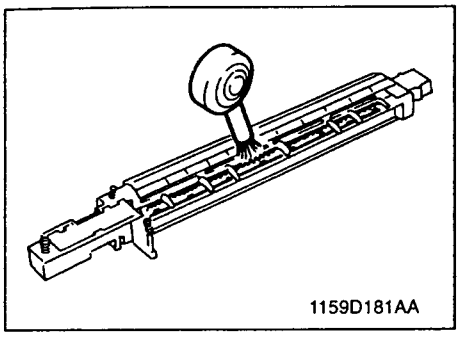

1. Use a blower brush to clean the Comb Electrode, Paper Separator Corona.

(10) Cleaning of the Pre-Image Transfer Guide Plate

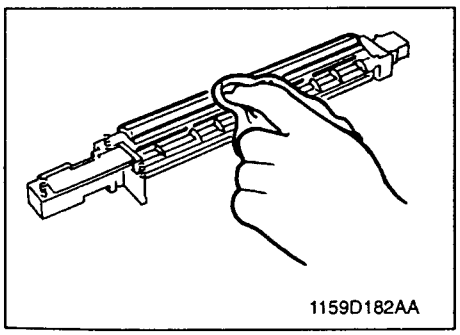

1. Use a soft cloth dampened with alcohol to clean the Pre-Image Transfer Guide Plate.

1159SBD0207A

2-7. FUSING UNIT

(1) Removal of the Fusing Unit

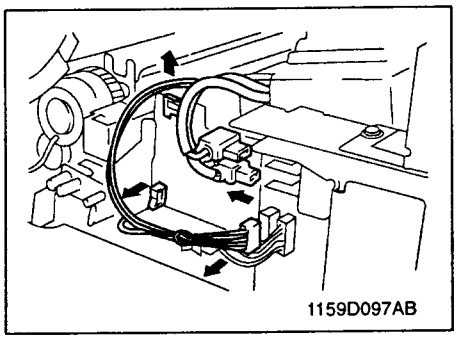

1. Swing down the Front Door.
2. Release and swing up the Upper Half of the copier.
3. Removal three screws and the Middle Rear Left Cover.
4. Remove the Harness for the Fusing Unit from the Edge Cover and remove it from the Cord Clamp.
5. Remove the two terminals for the Fusing Unit.

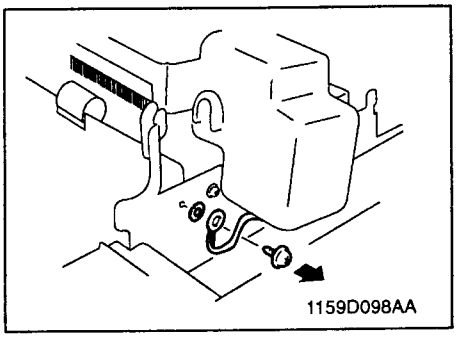

6. Remove the one screw, two washers and Ground Wire from the Fusing Unit.

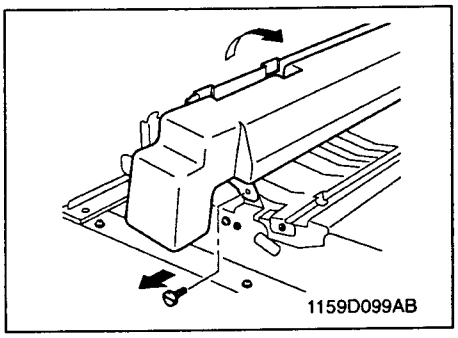

7. Remove the one Shoulder Screw, turn the Fusing Unit in the direction of the arrow and remove it.

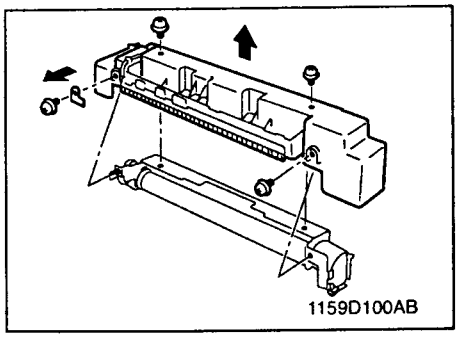

8. Remove one screw and the Bracket.
9. Remove the three screws and the Cover for the Fusing Unit.
10. Remove the one screw and front Heater Harness.

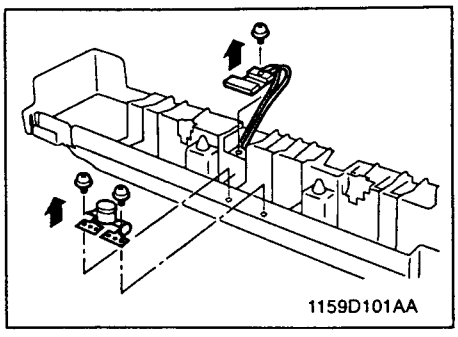

11. Remove two screws and the Fusing Thermoswitch.
12. Remove one screw and the Fusing Thermistors.

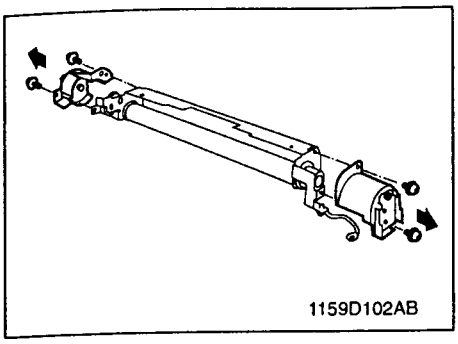

13. Remove the two screws and the front Power Supply Brush Assy.
14. Remove the two screws and the rear Power Supply Brush Assy.

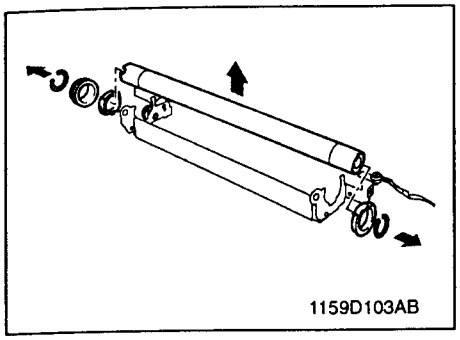

15. Remove two C-clips.
16. Remove one Spur Gear.
17. Remove the front and rear Bushings and remove the Roller.

(2) Cleaning of the Upper Fusing Roller

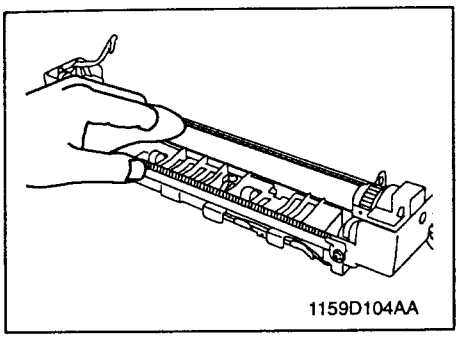

1. Using a soft cloth dampened with alcohol or silicone oil, wipe clean the Upper Fusing Roller.

(3) Cleaning of the Fusing Paper Separator Fingers

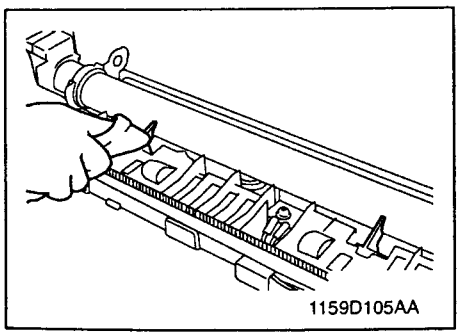

1. Using a soft cloth dampened with alcohol or silicone oil, wipe clean the Fusing Paper Separator Fingers.

(4) Cleaning of the Fusing Thermistor TH1

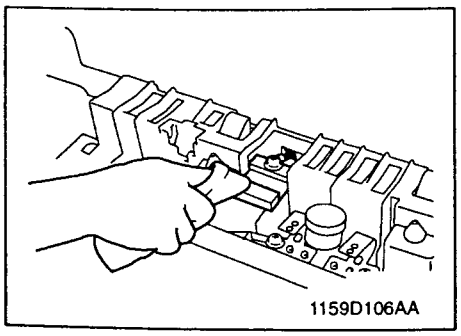

1. Using a soft cloth dampened with alcohol or silicone oil, wipe clean the Fusing Thermistor TH1.

(5) Cleaning of the Fusing Thermoswitch TS1

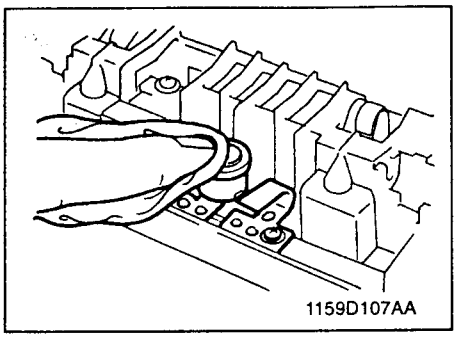

1. Using a soft cloth dampened with alcohol or silicone oil, wipe clean the Fusing Thermoswitch TS1.

(6) Removal of the Lower Fusing Roller

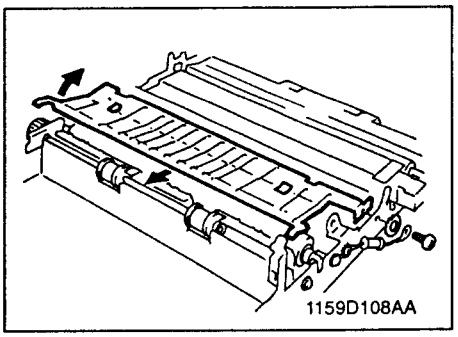

1. Remove the one screw and one washer, Lift the Fusing Entrance Guide in the direction of the arrow and remove.

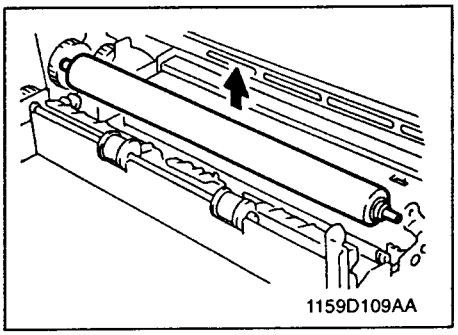

2. Remove the Lower Fusing Roller.

(7) Cleaning of the Lower Fusing Roller

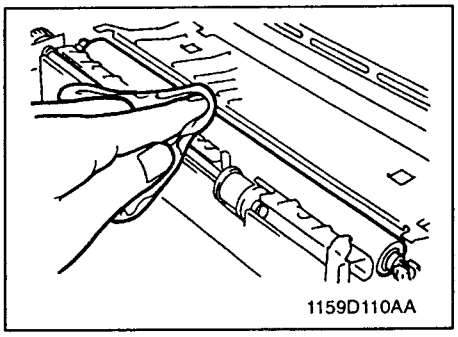

1. Using a soft cloth dampened with alcohol or silicone oil, wipe clean the Lower Fusing Roller.

(8) Cleaning of the Fusing Unit Entrance Guide Plate

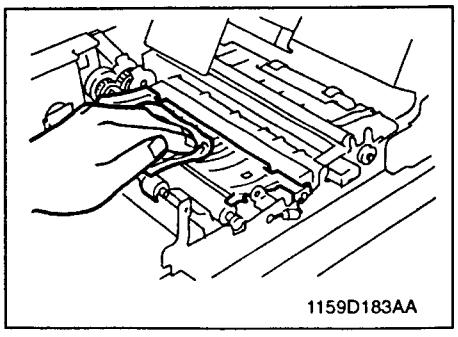

1. Remove the Fusing Unit.
2. Using a soft cloth dampened with alcohol, wipe clean the Fusing Unit Entrance Guide Plate.

1159SBD0208A

2-8. SDH Unit (EP1030F/EP1031F Only)

(1) Removing the Paper Feed Roller/Pick-up Roller/Separator Roller

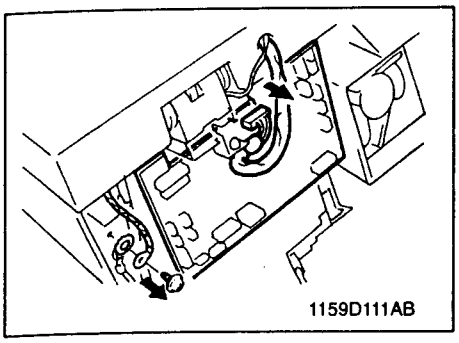

1. Swing down the Front Cover.
2. Release and swing up the Upper Half of the copier.
3. Remove three screws and the Rear Cover.
4. Remove the one Connector from the PWB-A.
5. Remove the one screw, one washer and the Ground Wire.

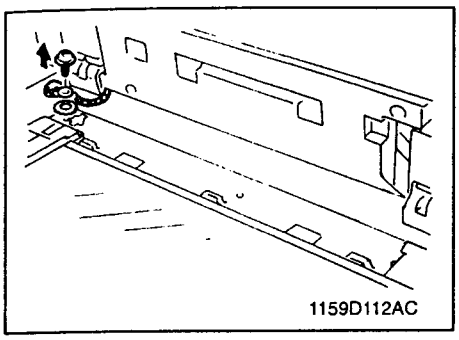

6. Open the SDH and remove the one screw, one washer and the Ground Wire.

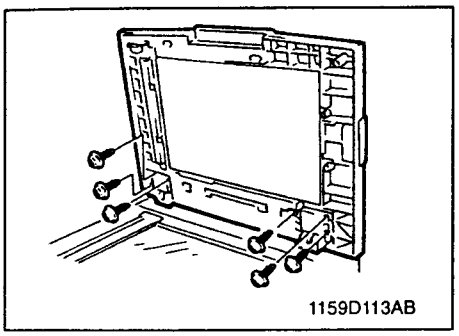

7. Remove the six screws and SDH.

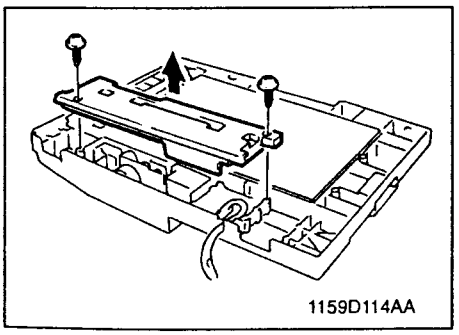

8. Remove the two screws and Lower Rear SDH Cover.

> ***NOTE***
> *The SDH, left attached to the copier, can also be disassembled.*

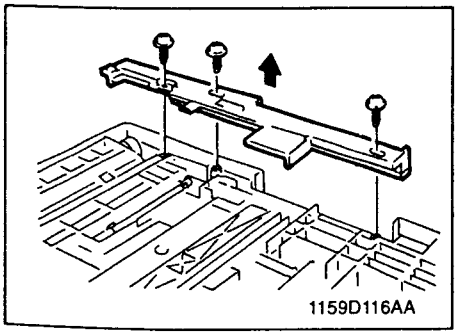

9. Remove the three screws and Lower Front SDH Cover.

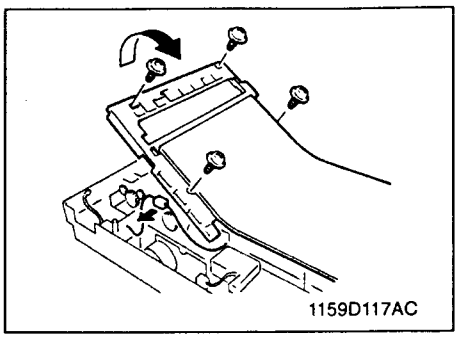

10. Remove the Harness.
11. Remove the four screws and the Transport Guide Plate Assy.

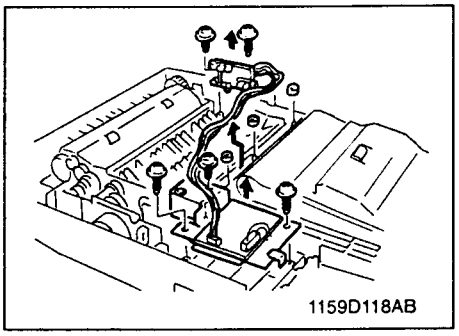

12. Remove the three Collars and the Harness.
13. Remove the three screws and free the PWB-C Assy.
14. Remove the two screws and free the Lead Switch Assy.

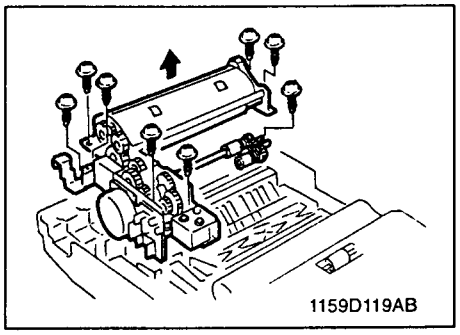

15. Remove the eight screws and the Transport Assy.

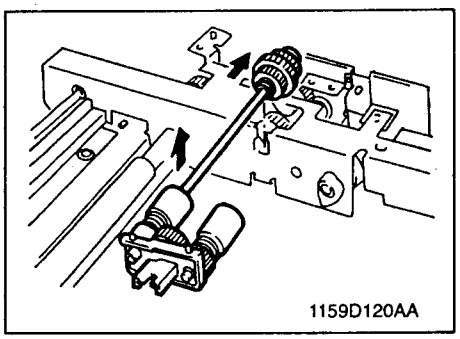

16. Move the Bushing to the rear and remove the Paper Roller Assy.

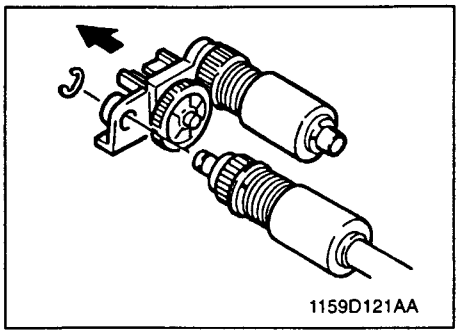

17. Snap off the one E-ring to remove the Paper Feed Holder Assy.

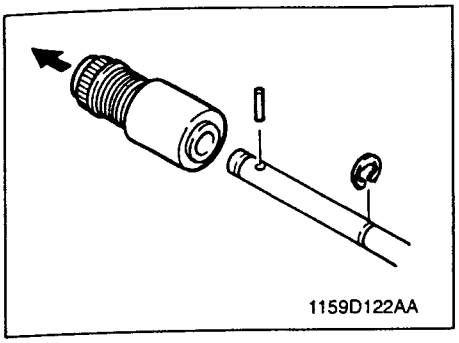

18. Snap off the one E-ring to remove the Paper Feed Roller Assy.

> ***NOTE***
> *Use care not to loose the Set Pin when removing the Paper Feed Roller Assy.*

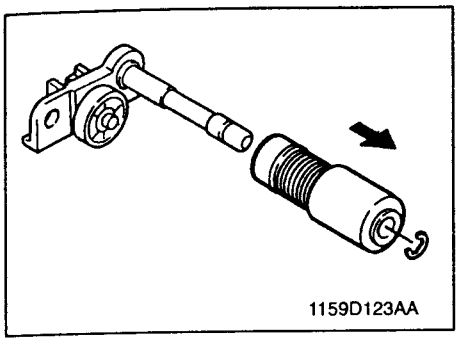

19. Snap off the one E-ring to remove the Pick-up Roller from the Paper Feed Holder Assy.

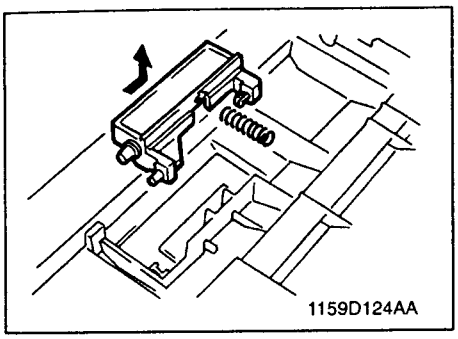

20. Remove the Separator Holder and Spring from the Transport Guide Plate.

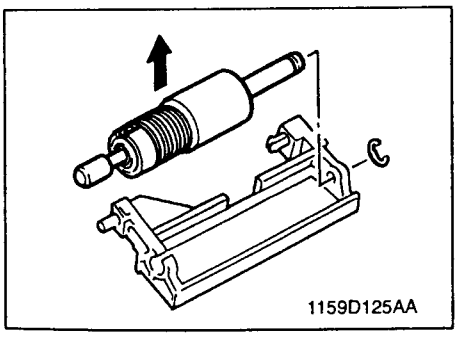

21. Snap off the one E-ring to remove the Separator Roller Assy.

(2) Cleaning the Paper Feed Roller/Pick-up Roller

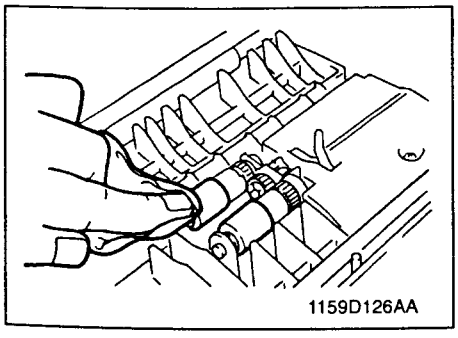

1. Remove the Paper Feed Roller/Pick-up Roller.
2. Using a soft cloth dampened with alcohol, wipe clean the Rollers.

(3) Cleaning of the Separator Roll

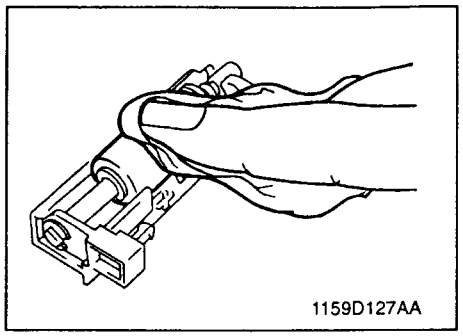

1. Remove the Separator Roller Assy.
2. Using a soft cloth dampened with alcohol, wipe clean the Separator Roll.

(4) Cleaning of the Upper Synchronizing Roller

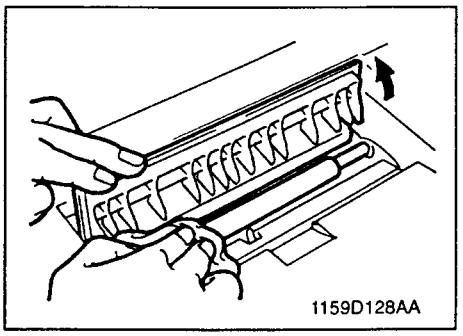

1. Open the Opening/Closeing Guide .
2. Using a soft cloth dampened with alcohol, wipe clean the Upper Synchronizing Roller.

(5) Cleaning of the Lower Synchronizing Roller

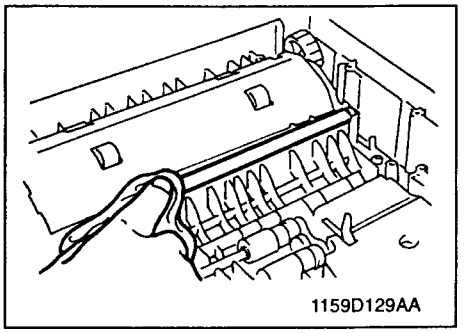

1. Remove the Transport Assy.
2. Using a soft cloth dampened with alcohol, wipe clean the Lower Synchronizing Roller.

(6) Cleaning the Upper Glass Roller

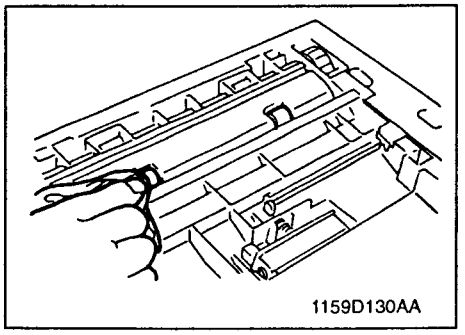

1. Remove the Transport Assy.
2. Using a soft cloth dampened with alcohol, wipe clean the Upper Glass Roller.

(7) Cleaning the Transport Roller

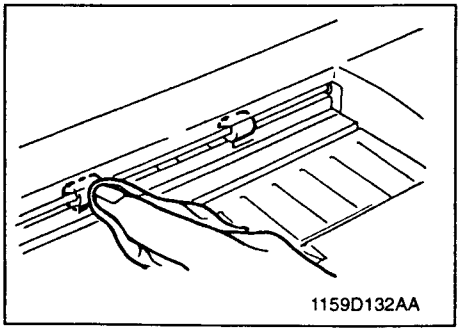

1. Remove the Transport Assy.
2. Using a soft cloth dampened with alcohol, wipe clean the Transport Roller.

(8) Cleaning the Exit Roller

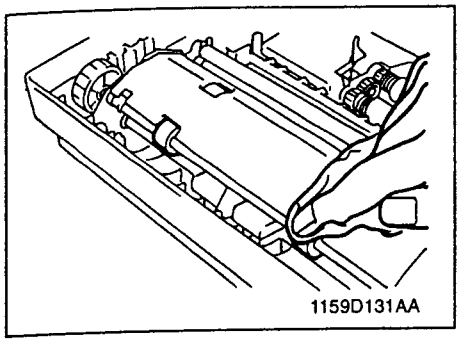

1. Using a soft cloth dampened with alcohol, wipe clean the Exit Roller.

1156SBD0300A

3 ADJUSTMENT

1159SBD0301A

3-1. JIGS AND TOOLS USED

◆ **Important**

- These jigs are used when adjusting the Scanner for correct positioning.

①Scanner Adjusting jig (Front)

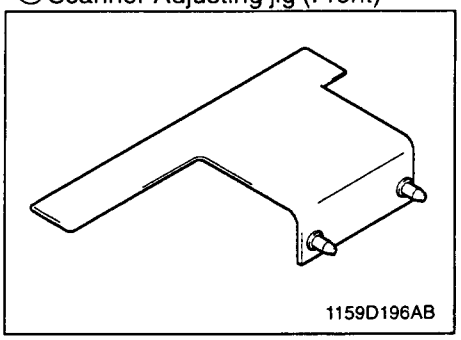

1159D196AB

②Scanner Adjusting jig (Rear)

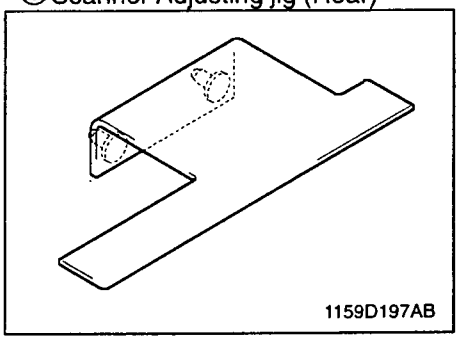

1159D197AB

1159SBD0302A

3-2. ADJUSTMENT REQUIREMENTS LIST

Adjustment Item	Requirements	Adjusting Point	Ref. Page
MAX. Exposure Lamp Voltage	115 V to 127 V Areas 80 ± 1 V 220 V to 240 V Areas 160 ± 2 V	Control panel	D-42
Adjustment of Optimum Exposure Setting in the Manual Exposure Mode	Over No. 1 and covering No. 2 (KGS)	Control panel	D-44
Adjustment of Exposure Level in the Auto Exposure Mode	———————	Control panel	D-46
Adjustment of Zoom Ratio in the Crosswise Direction	(100 %) 200 ± 1.0 mm	Control panel	D-49
Adjustment of Zoom Ratio in the Feeding Direction	(100 %) 200 ± 1.0 mm	Control panel	D-51
Adjustment of Reference Position of Manual Bypass Table	(100 %) 20 ± 3.0 mm	Manual Bypass Table	D-53
Adjustment of Reference Position of Paper Feed Cabinet	(100 %) 20 ± 2.0 mm	Original Width Scale	D-54
Leading Edge Registration in Full Size Mode	(100 %) 20 ± 1.5 mm (Cassette Section) (100 %) 20 ± 2.0 mm (Manual Bypass Section)	Control panel	D-55
Leading Edge Registration in Enlargement Mode (*1)	(156 %) 31.2 ± 2.4 mm	Control panel	D-57
Leading Edge Registration in Reduction Mode (*1)	(64 %) 12.8 ± 1.2 mm	Control panel	D-59
Adjustment of the Image Leading Edge Erase Width	(100 %) 3.5 ± 0.5 mm	Control panel	D-61
Adjustment of Edge Erase (*1)	Width B – Width A = ± 1.0 mm	Adjusting Screw for Edge Erase Lamp Position	D-63
Adjusting the SDH Reference Position (*2)	(100 %) 20 ± 2.0 mm	Mounting Screw on the upper SDH cover.	D-64
Adjusting the Leading Edge Registration (*2)	(100 %) 20 ± 2.0 mm	Control panel	D-65
Adjustment of SDH Center Alignment (*2)	Width B – Width A = ± 1.0 mm	Mounting Screw on left side of SDH	D-67

*1: EP1031/EP1031F Only

*2: EP1030F/EP1031F Only

1159SBD0303A

3-3. ACCESSING THE TECH. REP. MODE

1. Perform the following steps to set the copier in to Service Mode.

Clear/Stop Key → Exposure Control Key (<) → Clear/Stop Key →

→ Exposure Control Key (>)

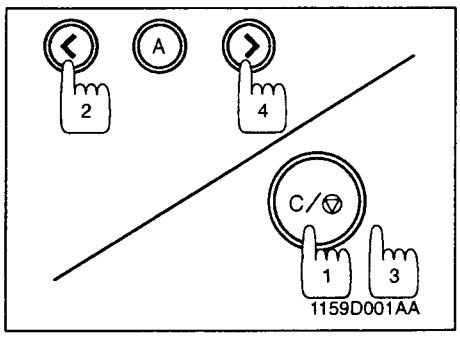

Press the Keys in order of [1], [2], [3], and [4].

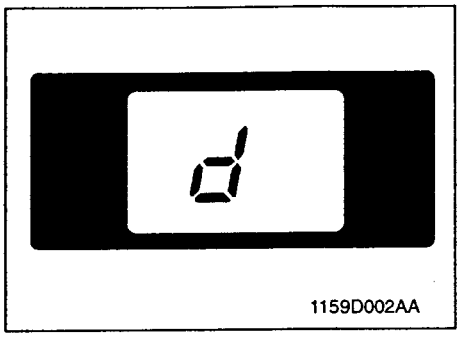

Set the Display Panel to a flashing "d".

2. Use the Copy Quantity and Zoom Key ① to select the Service Mode No. for the setting to be performed and press the Start Key. (Display will appear in sequence d, c, A, F)

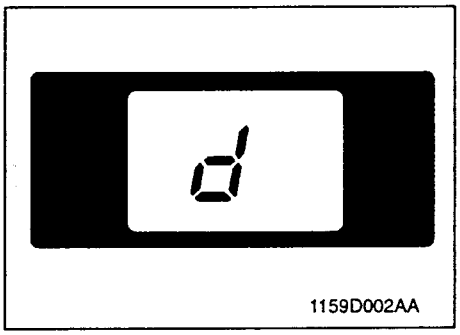

Display

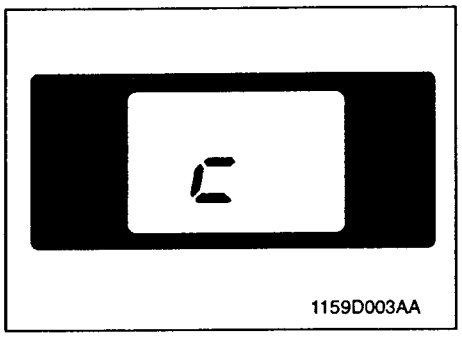

Tech. Rep. Choice

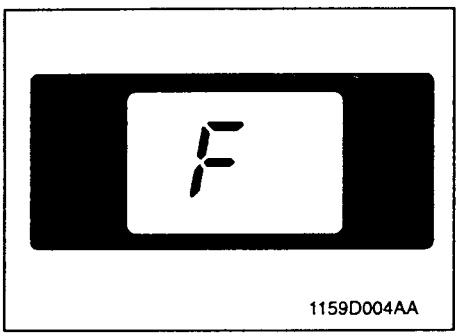

Test

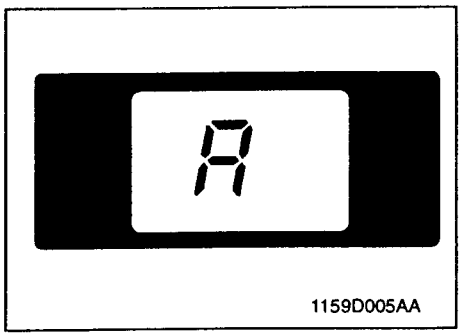

Adjust

3-4. ELECTRICAL/IMAGE ADJUSTMENTS

(1) Adjustment of the Maximum Exposure Lamp Voltage for the Manual Mode

◆ **Requirement**

- Maximum Exposure Lamp Voltage : 80 ± 1 V (115 V~127 V Areas)
  : 160 ± 2 V (220 V~240 V Areas)

◆ Important

- After the Maximum Exposure Lamp Voltage has been adjusted, be sure to make the following adjustments: Optimum Exposure Setting in the Manual Exposure Mode and Exposure Level in the Auto Exposure Mode.

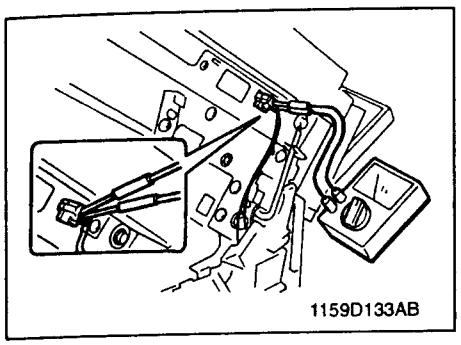

1. Remove the Control Panel/lower Panel Cover.
2. Insert the probes of the multimeter into the gap in the Exposure Lamp Voltage measurement connector.
3. Set to Service Mode.
4. To adjust the MAX. Exposure Lamp Voltage, press the following keys in the indicated sequence: Copy Quantity and Zoom Key ① three times; the Start Key one time and the Copy Quantity and Zoom Key ① two times.

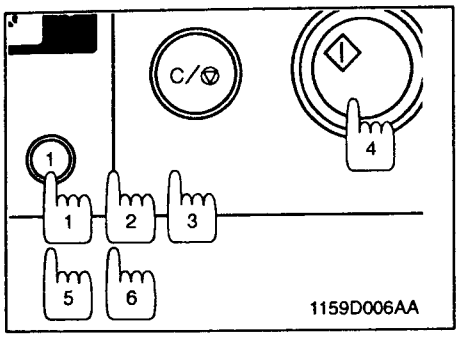

Press the Keys in order of [1], [2], [3], [4], [5], and [6].

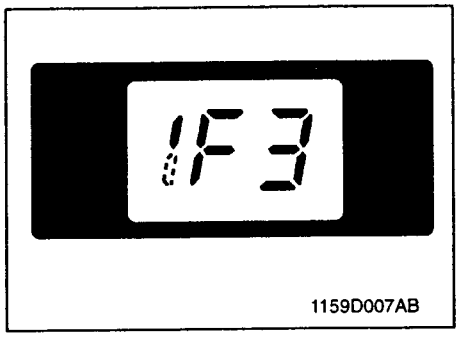

"F3" will appear in the Display Panel.

5. Check that the upper segment of "▌" to the left of "F3" is lit up. If the lower segment is lit up, press Exposure Control Key Ⓐ to turn OFF the lower segment and light up the upper one.
6. Press the Start Key to turn on the Exposure Lamp and check its voltage.
7. Use the value shown on the Tester and the Specification Table on page D-43 to calculate the Correction Value. (For Example: 164 V – 160 V = + 4 V (the Correction Value)
8. Use the Correction Value to find the Number of Steps and then push the Exposure Control Keys to change the settings for adjusting the MAX. Exposure Lamp Voltage.
9. Push the Clear/Stop Key to set the settings.

NOTE

For the Root Mean Square values and Mean values, see p.69-70. Most testers, voltmeters, or multimeters used in the field show only the mean values.

Setting Instructions

If the value shown on the Tester is:

- Higher ..... Increase the setting
- Lower ..... Decrease the setting

*If the measurement does not fall within the specifications through on setting, try another setting.

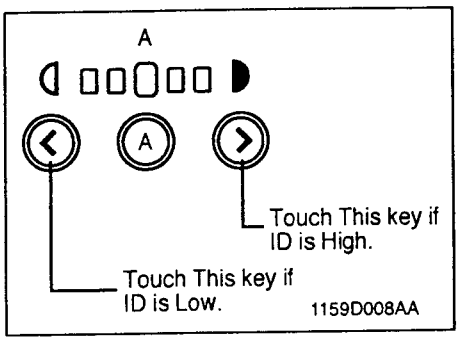

4. After the adjustments have been made, press the Clear/Stop Key three times to restore the copier to the normal copy mode.

Correction Value for 80 V Specifications (V)	Correction Value for 160 V Specifications (V)	Exposure Control Keys	Number of Steps	LED Position
+4	+8	<	4	
+3	+6		3	
+2	+4		2	
+1	+2		1	
0	0	—	0	
−1	−2	>	1	
−2	−4		2	
−3	−6		3	
−4	−8		4	

(2) Adjustment of Optimum Exposure Setting in the Manual Exposure Mode

◆ **Requirement**

- Exposure Lamp voltage setting range in the Manual Exposure mode ... 46 to 54
- When the manual exposure setting is at the central indication, no image of step no. 1 of a Kodak Gray Scale should be produced on the copy, but a faint image of step no. 2 should be produced.

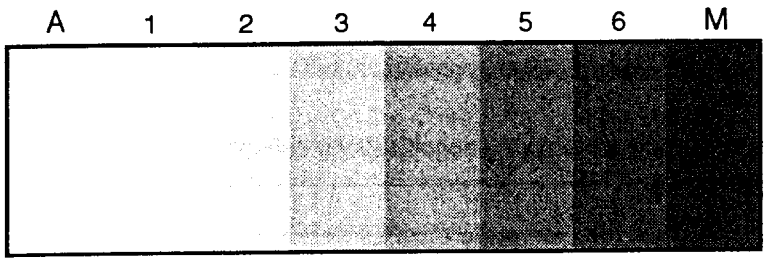

1136D300AA

◆ **Important**

This adjustment should be made only after completing the "Adjustment of the MAX. Exposure Lamp Voltage for the Manual Mode".

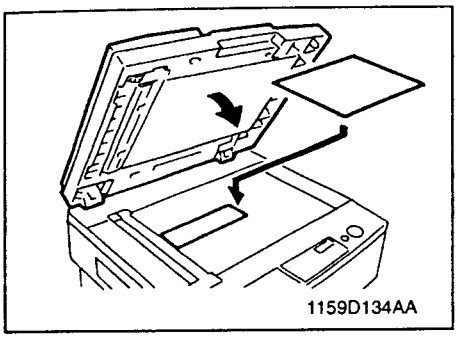

1159D134AA

1. Place the Kodak Gray Scale (KGS) in the center of the Original Glass, place a sheet of A4 or 8-1/2" × 14" paper on top of it and close the Original Cover.
2. Use the Control Panel to manually set the exposure position to EXP 5 (the center position), make one copy at the 1:1 zoom ratio and confirm that it passes over 1 and into 2.

* If the image density is outside the specifications, make the following adjustment.

3. Set to Service Mode.
4. To adjust the voltage the AC MAX Exposure Lamp, press the following keys in the indicated sequence: Copy Quantity and Zoom Key ① three times; Start key once; and Copy Quantity and Zoom Key ① twice. Or, holding down Exposure Control Key Ⓐ, turn ON the Power Switch to set the F3 Max. Exposure Lamp Voltage.

NOTE

When the Power Switch is turned ON with Exposure Control Key Ⓐ held down, "F3" does not appear on the Display Panel.

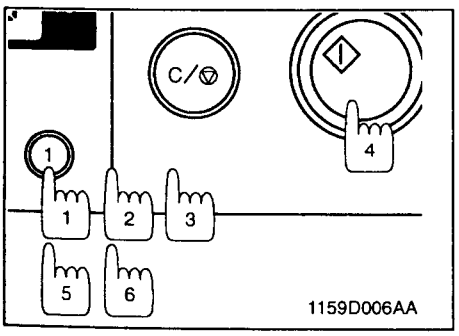

1159D006AA

Press the Keys in order of [1], [2], [3], [4], [5], and [6].

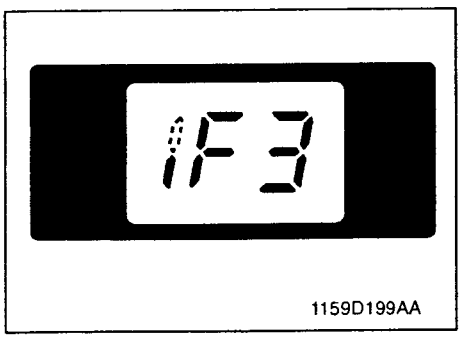

1159D199AA

"F3" will appear in the Display Panel.

5. Check that the lower segment of " ▌" to the left of "F3" is lit up. If the upper segment is lit up, press Exposure Control Key Ⓐ to turn OFF the upper segment and light up the lower one.
6. Look at the image density of the sample copy. Press the Copy Quantity and Zoom Keys to change the settings for adjusting the voltage for the Exposure Lamp.
7. Press the Clear/Stop Key to set the settings.

Setting Instructions

- If the image density low, decrease the setting value.
- If the image density high, increase the setting value.

* If the image density does not fall within the specifications through one setting, try another setting.

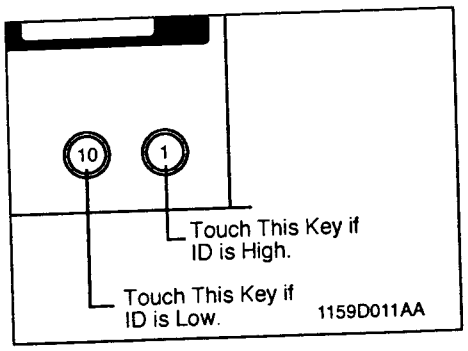

8. After the adjustments have been made, press the Clear/Stop Key two times to restore the copier to the normal copy mode.

(3) Adjustment of Exposure Level in the Auto Exposure Mode

◆ **Important**

- When making adjustments, the exposure position on the Control Panel must be set to Auto.
- For the adjustment, place about five blank sheets of A4 or 8-1/2" × 14" paper one on top of the other on the Original Glass and lower the Original Cover.
- After this adjustment, be sure to check the "Adjustment of optimum exposure setting in the Manual Exposure mode".

1. Confirm that the exposure position on the Control Panel is set to Auto. Stack five blank sheets of A4 or 8-1/2" × 14" paper on top of each other on the Original Glass and close the Original Cover.

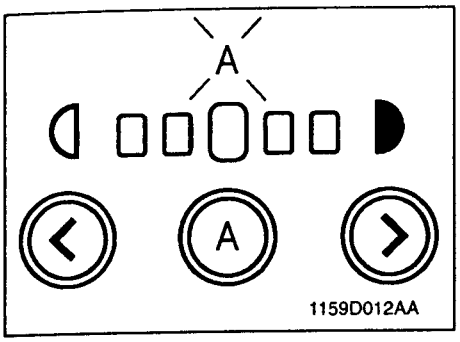

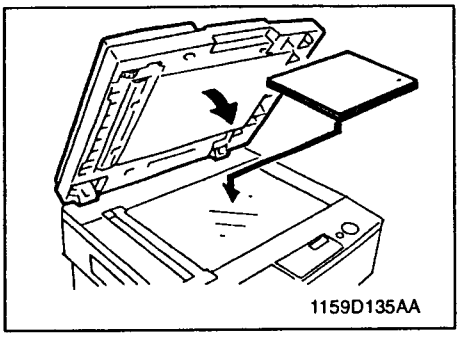

2. Set to Service Mode.
3. To adjust the F5 AE Sensor Automatic Adjustment, press the following keys in the indicated sequence: Copy Quantity and Zoom Key ① three times; the Start Key one time and the Copy Quantity and Zoom Key ① three times.
4. Press the Start Key to perform adjustment of the Auto Exposure. (Approximately 15 Seconds)

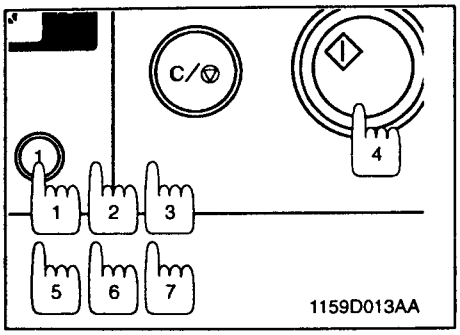

Press the Keys in order of [1], [2], [3], [4], [5], [6] and [7].

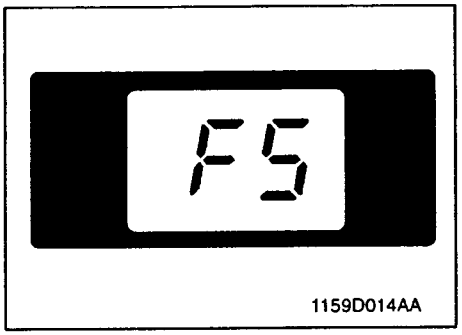

"F5" will appear in the Display Panel.

5. After the adjustments have been made, press the Clear/Stop Key two times to restore the copier to the normal copy mode.

(4) ATDC Adjustment

◆ **Important**

- ATDC adjustment is not necessary when a new IU is used. (Set the Starter and ATDC adjustment will be automatically entered when the power is turned on.)
- Always perform ATDC adjustment when a new Starter has been set with a existing IU.

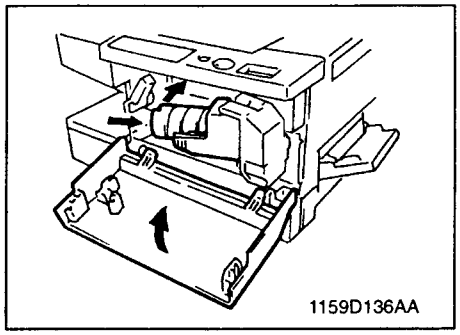

1. Set the Starter and close the Front Door.
2. Set to Service Mode.
3. To adjust the F8 AE Sensor Automatic Adjustment, press the following keys in the indicated sequence: Copy Quantity and Zoom Key ① three times; the Start Key one time and the Copy Quantity and Zoom Key ① four times.

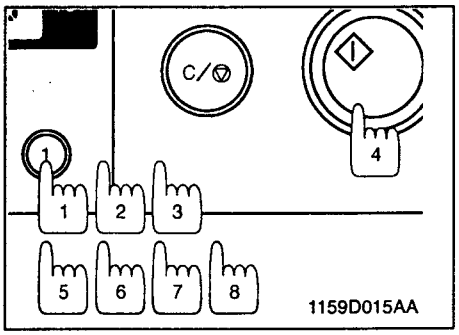

Press the Keys in order of [1], [2], [3], [4], [5], and [6].

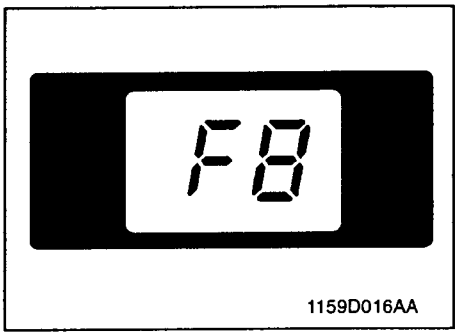

"F8" will appear in the Display Panel.

4. Press the Start Key to perform adjustment of the ATDC.
5. After the adjustments have been made, press the Clear/Stop Key two times to restore the copier to the normal copy mode.

(5) Adjustment of the Aperture Blades

◆ **Requirement**

- There should be no dark or light bands running in the feeding direction on copies produced. (Adjust to obtain the mean image density for all areas.)

◆ **Important**

- If dark and light bands running in the feeding direction occur on copies, make this adjustment after checking following.

1) The surfaces of the Mirror and Lens are free of dirt.
2) The surfaces of the Exposure Lamp and Main Erase Lamp free of scratches and dirt.

1. Make copies in the following modes.

Original	: A4 or 8-1/2" × 14"
Paper	: A4 or 8-1/2" × 14"
Magnification ratio	: 100 %
Exposure	: Manual (setting convenient for check)

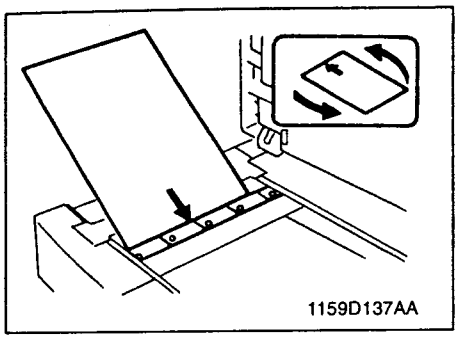

2. Remove the Original Glass.
3. Turn the copy on the Copy Tray Around as shown to reverse the leading and trailing edges and align it with the Aperture Blades.

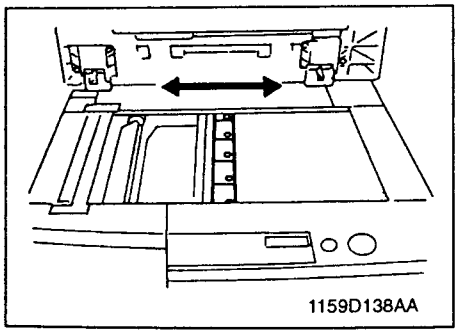

4. Adjust to obtain the mean image density for all areas of the copy.

NOTE

To make the image darker, move the Aperture Blade toward the Auxiliary Reflector.
To make the lighter darker, move the Aperture Blade away from the Auxiliary Reflector.

(6) Adjustment of Zoom Ratio in the Crosswise Direction (EP1031/EP1031F Only)

◆ **Requirement**

- This adjustment is made for the Zoom ratio in the crosswise direction.
- A scale is placed on the Original Glass to run parallel with the scanner and the length of the scale on the copy is compared with that of the actual scale. The adjustment must be made so that the difference between the two dimensions falls within the following specifications.

The difference should be within ± 0.5 % of the actual length.

Against 200mm, allowance is 200 mm × 0.005 = 1.0 mm

Zoom Ratio	Specifications	Adjusting Mode	Setting Range
Full size (× 1.000)	220 ± 1.0 mm	Adjust A1 =Lens Full Size Position	33 to 67

◆ **Important**

This adjustment must be made before the "Reference Position Adjustment".

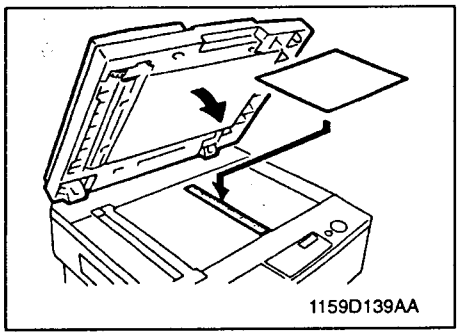
1159D139AA

1. Place a scale in parallel with the Original Width Scale and make a copy.
   * Make a one copy using A4 or 8-1/2" × 14" paper at a 1:1 zoom ratio.
   * If the scale is of plastic and transparent, place a blank sheet of paper on it.

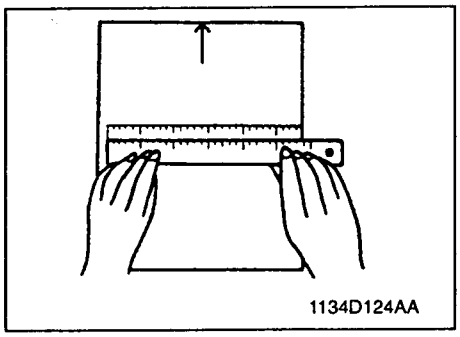
1134D124AA

2. Measure the crosswise zoom ratio of the sample copy. Measure the length of the scale on the copy with the actual scale to determine if there is any deviation.
   * If the zoom ratio deviates from the specifications, go to the next step.

3. Set to Service Mode.
4. To correct the A1 Lens Full Size Position, press the following keys in the indicated sequence: Copy Quantity and Zoom Key ① one time; the Start Key one time and the Copy Quantity and Zoom Key ① one time.

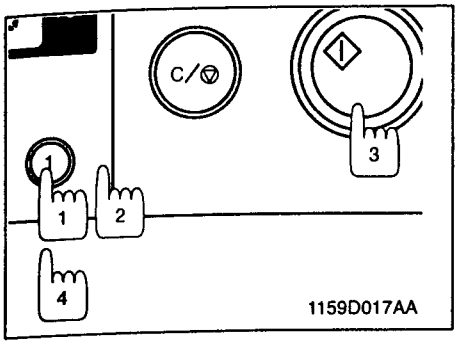

Press the Keys in order of [1], [2], [3], and [4].

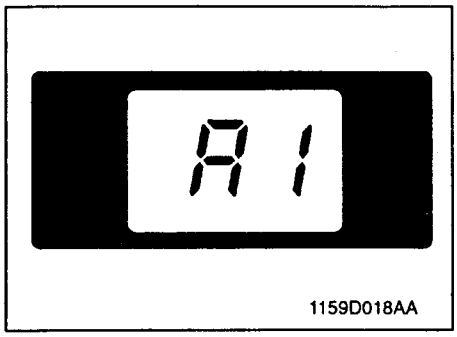

"A1" will appear in the Display Panel.

5. Press the Start Key and press the Copy Quantity and Zoom Keys to change the setting for correcting the Lens Full Size Position.
6. Press the Clear/Stop Key to set the settings.

Setting Instructions

- If the scale on the copy is longer than the actual scale, decrease the setting value.
- If the scale on the copy is shorter than the actual scale, increase the setting value.

* If the measurement does not fall within the specifications through one setting, try another setting.

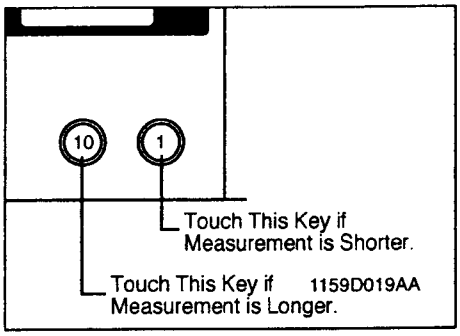

7. After the adjustments have been made, press the Clear/Stop Key three times to restore the copier to the normal copy mode.

(7) Adjustment of Zoom Ratio in the Feeding Direction

◆ **Requirement**

- This adjustment is made for the zoom ratio in the feeding direction.
- A scale is placed on the Original Glass Perpendicularly to the Scanner and the length of the scale on the copy is compared with that of the actual scale. The adjustment must be made so that the difference between the two dimension falls within the following specifications.

The difference should be within ± 0.5 % of the actual length.

Against 200 mm, allowance is 200 mm × 0.005 = 1.0 mm

Zoom Ratio	Specifications	Adjusting Mode	Setting Range
Full size (× 1.000)	200 ± 1.0 mm	Adjust A3 =Feed Direction Mag. Ratio	43 to 57

◆ **Important**

This adjustment must be made before the "Adjustment of the Leading Edge Registration".

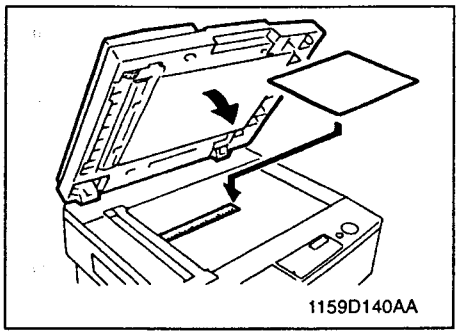

1. Place a scale in parallel with the Original Length Scale and make a copy.
   * Make a one copy using A4 or 8-1/2" × 14" paper at a 1:1 zoom ratio.
   * If the scale is of plastic and transparent, place a blank sheet of paper on it.

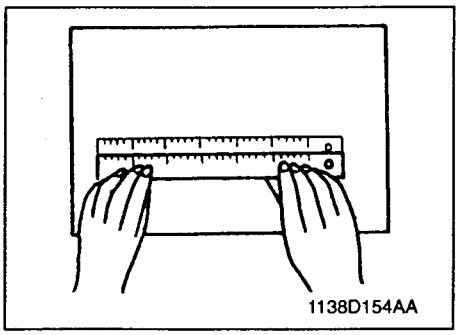

2. Measure the crosswise zoom ratio of the sample copy. Measure the length of the scale on the copy with the actual scale to determine if there is any deviation.
   * If the zoom ratio deviates from the specifications, go to the next step.

3. Set to Service Mode.
4. To correct the A2 feeding direction zoom ratio, press the following keys in the indicated sequence: Copy Quantity and Zoom Key ① two times; the Start Key one time and the Copy Quantity and Zoom Key ① two times.

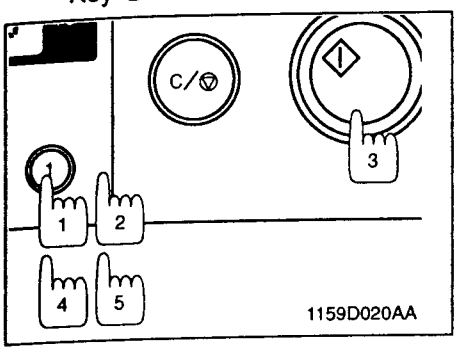

Press the Keys in order of [1], [2], [3], [4], and [5].

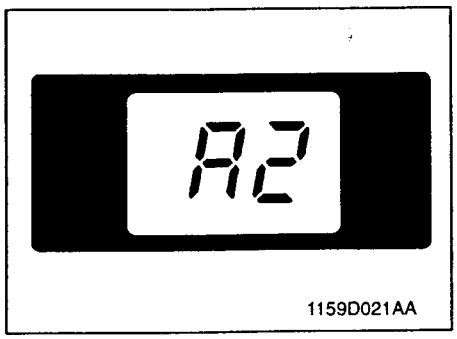

"A2" will appear in the Display Panel.

5. Press the Start Key and press the Copy Quantity and Zoom Keys to change the setting for correcting the feeding direction zoom ratio.
6. Press the Clear/Stop Key to set the settings.

Setting Instructions

- If the scale on the copy is longer than the actual scale, decrease the setting value.
- If the scale on the copy is shorter than the actual scale, increase the setting value.

* If the measurement does not fall within the specifications through one setting, try another setting.

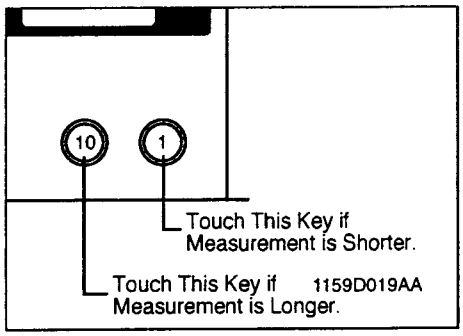

7. After the adjustments have been made, press the Clear/Stop Key two times to restore the copier to the normal copy mode.

(8) Adjustment of the Reference Position of the Manual Bypass Table

◆ **Requirement**

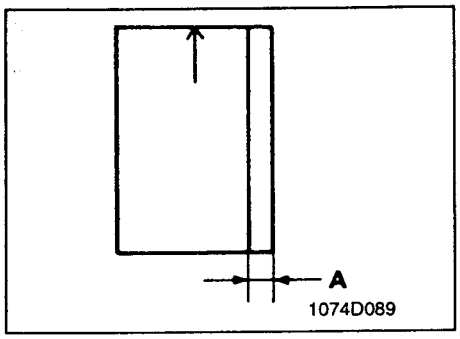

- As shown in the illustration on the left, use a A4 test chart or a sheet of 8-1/2" × 14" paper to draw a reference line 20 mm from the left edge.
- Specification ..... 20 ± 3.0 mm

◆ **Important**

This adjustment should be made after the "adjustment of zoom ratio in the crosswise direction".

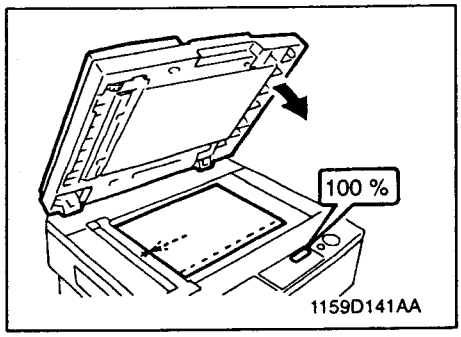

1. Place the test chart on the reference position for the original scale and close the Original Cover.
2. Use the Manual Bypass Table to make a one copy using A4 or 8-1/2" × 14" paper at a 1:1 zoom ratio.
3. Check if dimension A (from theedge up to the reference line) on the copy is up to the specifications.

<EP1031/EP1031F>

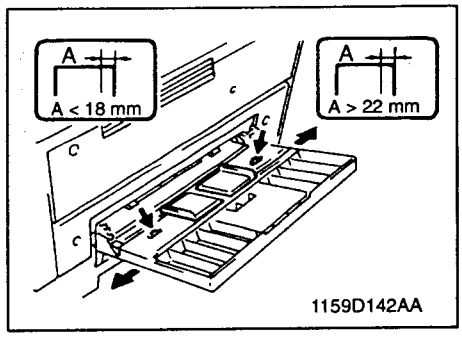

4. If dimension A deviates from the specifications, loosen two screws that secure the Manual Bypass Table and more the table in the direction of the arrow as necessary.

Adjusting Instructions

- If dimension A deviates on the copy is shorter than 17 mm move the table to the rear of the copier.
- If dimension A deviates on the copy is longer than 23 mm move the table to the front of the copier.

<EP1030/EP1030F>

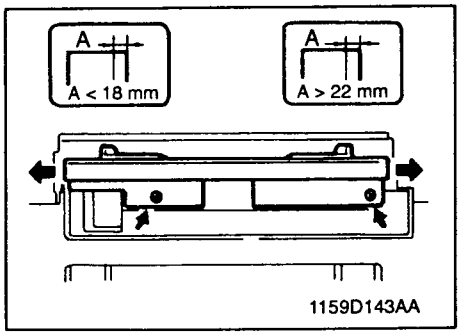

(9) Adjustment of Paper Feed Cabinet Reference Position

◆ **Requirement**

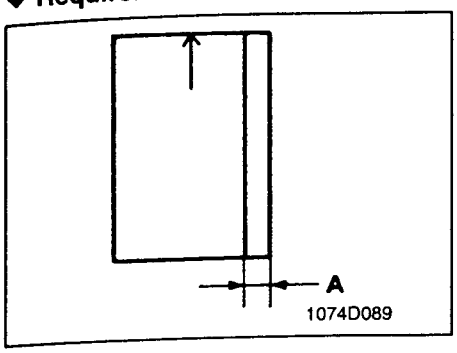

- As shown in the illustration on the left, use a A4 test chart or a sheet of 8-1/2" × 14" paper to draw a reference line 20 mm from the right edge.
- Specification ..... 20 ± 3.0 mm

◆ **Important**

This adjustment should be made after the "adjustment of zoom ratio in the crosswise direction".

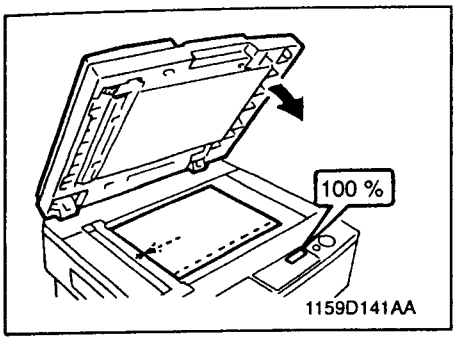

1. Place the test chart on the reference position for the original width scale and close the Original Cover.
2. Use the Paper Feed Cabinet to make a one copy using A4 or 8-1/2" × 14" paper at a 1:1 zoom ratio.
3. Check if dimension A (from theedge up to the reference line) on the copy is up to the specifications.

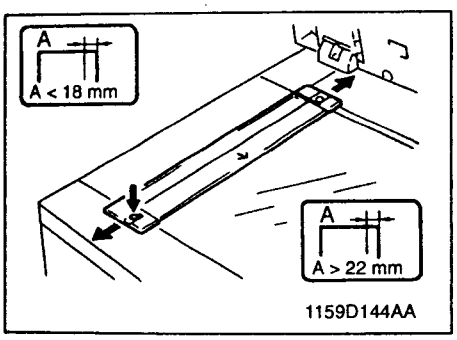

4. If the reference position is outside of the specification, loosen the one mounting screw for the Original Width Scale and use the confirmation sample to adjust the Original Width Scale in the correct direction.

Adjusting Instructions

- If dimension A on the copy is longer than 22 mm, move the position Plate to the front of the copier.
- If dimension A on the copy is Shorter than 18 mm, move the position Plate to the rear of the copier.

(10) Adjust of the Leading Edge Registration

◆ **Requirement**

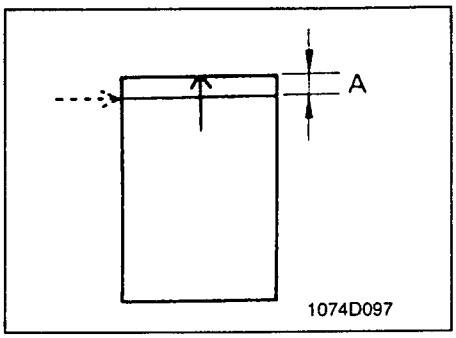

- As shown in the illustration on the left, use a A4 test chart or a sheet of 8-1/2" × 14" paper to draw a reference line 20 mm from the leading edge.
  Adjust so that on the copy, the width of A at the center section of the leading edge of the test chart will be within the specifications shown below.

Zoom Ratio	Specifications	Adjusting Mode	Setting Range
Full Size (× 1.000)	20 ± 1.5 mm Cabinet Section 20 ± 2.0 mm Manual Bypass Section	Adjust A3 =Lens Position Full Size	26 to 74
Enlargement (× 1.56)	31.2 ± 2.4 mm	Adjust A4 =Lens Position Enlargement	42 to 58
Reduction (× 0.67)	12.8 ± 1.2 mm	Adjust A4 =Lens Position Reduction	

◆ **Important**

- This adjustment should be made after the "adjustment of zoom ratio in the feeding direction".
- The adjustment of the registration for enlargement and reduction need only be performed on the EP1031/EP1031F.

(10)-1. Leading Edge Registration in Full Size Mode

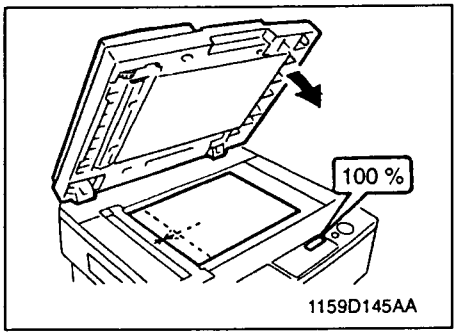

1. Place the Test Chart on the reference position for the Original Width Scale and close the Original Cover.
2. Make one copy using A4 or 8-1/2" × 14" paper at a 1:1 zoom ratio.
3. If the leading edge registration of the 1:1 copy is within the standards, proceed with the adjustment for adjustment of the zoom leading edge registration. (EP1031/EP1031F only) If it is outside the specifications, adjustment must be made using the following procedure.

4. Set to Service Mode.
5. To adjust the A3 Full Size Registration, press the following keys in the indicated sequence: Copy Quantity and Zoom Key ① two times; the Start Key one time and the Copy Quantity and Zoom Key ① three times.

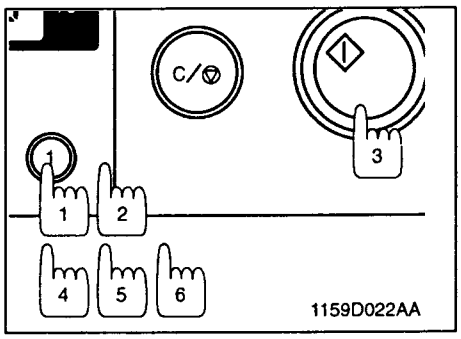

Press the Keys in order of [1], [2], [3], [4], [5], and [6].

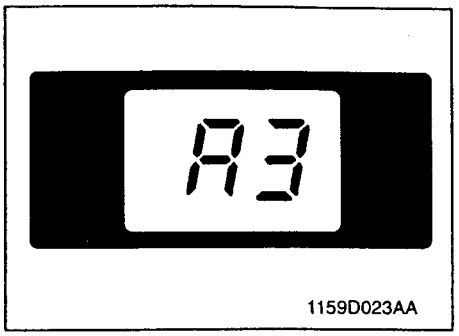

"A3" will appear in the Display Panel.

6. Press the Start Key to change the settings for the Full Size Registration.
7. Press the Clear/Stop Key to set the settings.

Setting Instructions

- If dimention A on the copy is longer than 21.5 mm, increase the setting value.
- If dimention A on the copy is Shorter than 18.5 mm, decrease the setting value.

* If the measurement does not fall within the specifications through one setting, try another setting.

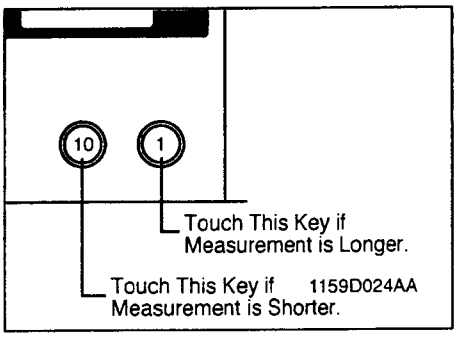

8. After the adjustments have been made, press the Clear/Stop Key to restore the copier to the normal copy mode.

(10)-2. Leading Edge Registration in Enlargement Mode

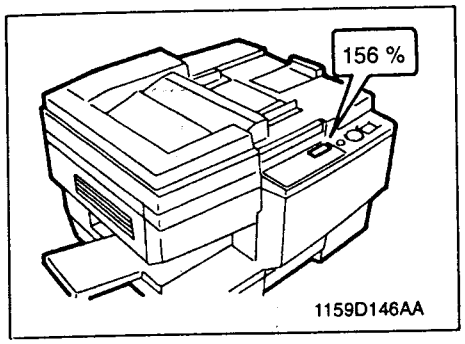

1. Once the 1:1 Zoom Registration has been adjusted, make one copy using A4 or 8-1/2" × 14" paper at a × 1.56 enlargement ratio.
2. If the registration is up to the specifications, go to the adjustment in the reduction mode. If it deviates from the specifications, perform the following steps to make the adjustment of leading edge registration in the enlargement mode.

◆ **Important**

- This adjustment should be made after the "adjustment of leading edge registration in the full size mode".

3. Set to Service Mode.
4. To adjust the A4 Enlargement Registration, press the following keys in the indicated sequence: Copy Quantity and Zoom Key ① two times; the Start Key one time and the Copy Quantity and Zoom Key ① four times.

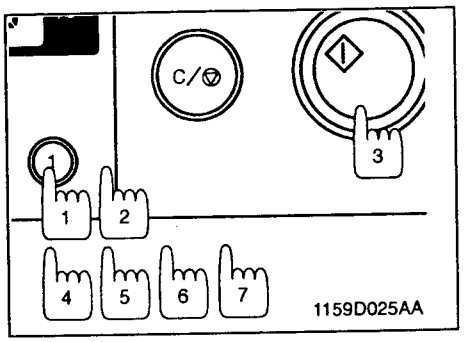

Press the Keys in order of [1], [2], [3], [4], [5], [6], and [7].

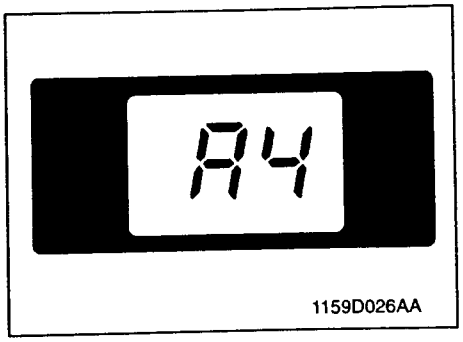

"A4" will appear in the Display Panel.

5. Press the Start Key and use the Copy and Zoom Keys to change the settings for the Enlargement Registration.
6. Press the Clear/Stop Key to set the settings.

Setting Instructions

- If dimention A on the copy is longer than 33.6 mm, increase the setting value.
- If dimention A on the copy is Shorter than 28.8 mm, decrease the setting value.

* If the measurement does not fall within the specifications through one setting, try another setting.

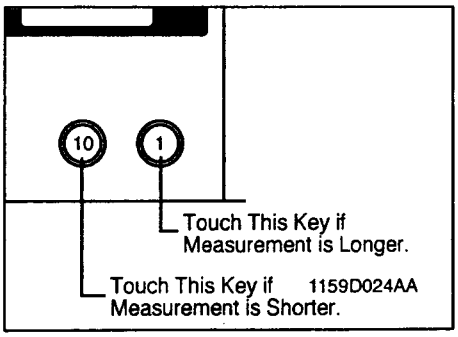

7. After the adjustments have been made, press the Clear/Stop Key to restore the copier to the normal copy mode.

(10)-3. Leading Edge Registration in Reduction Mode

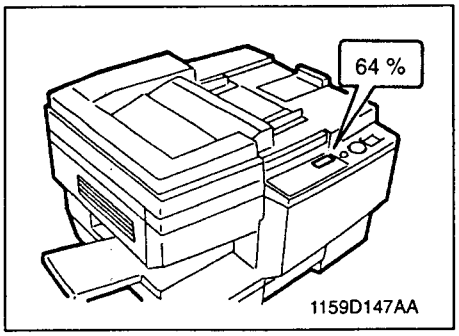

1. Once the Enlargement Registration has been adjusted, make one copy using A4 or 8-1/2" × 14" paper at a × 0.64 reduction ratio.
2. If the registration is up to the specifications, go to the adjustment in the reduction mode. If it deviates from the specifications, perform the following steps to make the adjustment of leading edge registration in the enlargement mode.

◆ **Important**

- This adjustment should be made after the "adjustment of leading edge registration in the full size mode".

3. Set to Service Mode.
4. To adjust the A5 Reduction Registration, press the following keys in the indicated sequence: Copy Quantity and Zoom Key ① two times; the Start Key one time and the Copy Quantity and Zoom Key ① five times.

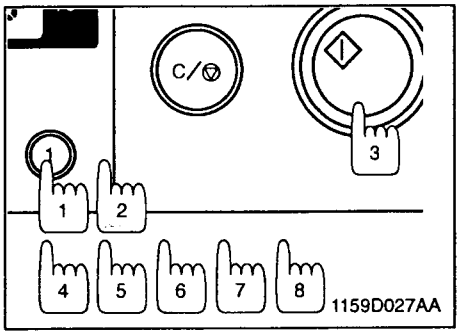

Press the Keys in order of [1], [2], [3], [4], [5], [6], [7], and [8].

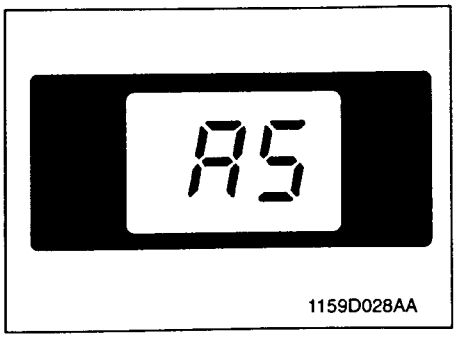

"A5" will appear in the Display Panel.

5. Press the Start Key to and use the Copy Quantity and Zoom Keys to change the settings for the Reduction Registration Adjustment.
6. Press the Clear/Stop Key to set the settings.

Setting Instructions

- If dimention A on the copy is longer than 14 mm, increase the setting value.
- If dimention A on the copy is Shorter than 16 mm, decrease the setting value.

* If the measurement does not fall within the specifications through one setting, try another setting.

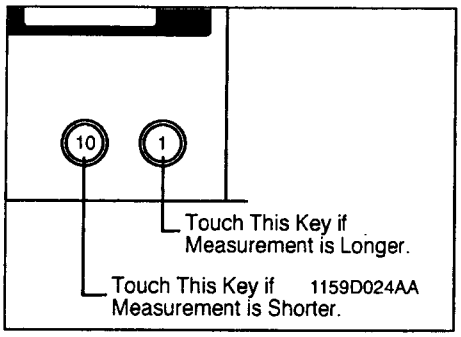

7. After the adjustments have been made, press the Clear/Stop Key three times to restore the copier to the normal copy mode.

(11) Adjustment of the Image Leading Edge Erase Width

◆ **Requirement**

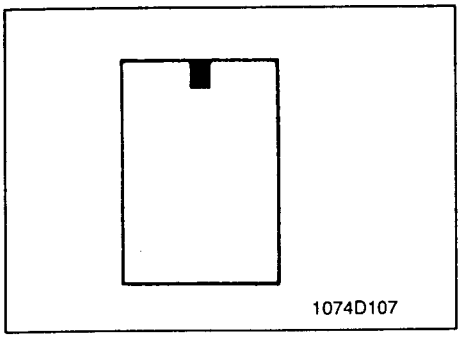

- As shown in the illustration on the left, use a A4 test chart or a sheet of 8-1/2" × 14" paper to draw black mark 20 approximately 20 mm from the center section of the leading edge. Adjust so that this black mark will image erase 3.0 to 4.0 mm from the leading edge.

- Specification ..... 3.5 ± 0.5 mm
- Adjustment Setting Range .... 38 to 68

◆ **Important**

- This adjustment should be made after the "adjustment of the leading edge registration".

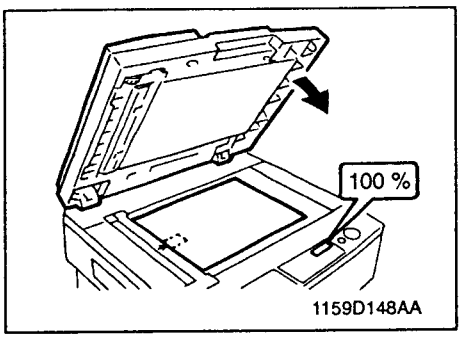

1. Place the test chart on the reference position for the original Width scale and close the Original Cover.
2. Make a one copy using A4 or 8-1/2" × 14" paper at a 1:1 zoom ratio.
3. If the erase width deviates from the specifications, perform the following steps to make the adjustment of image leading edge erase width.
4. Set to Service Mode.
5. To adjust the AA Leading Edge Erase Width, press the following keys in the indicated sequence: Copy Quantity and Zoom Key ① two times; the Start Key one time and the Copy Quantity and Zoom Key ① seven times.

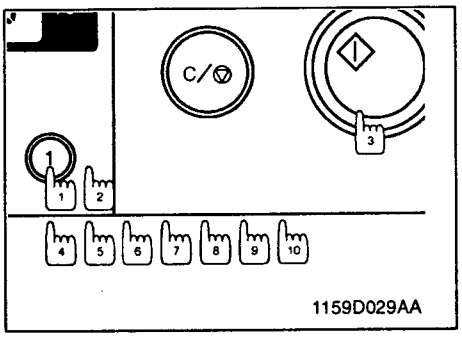

Press the Keys in order of [1], [2], [3], [4], [5], [6], [7], [8], [9], and [10].

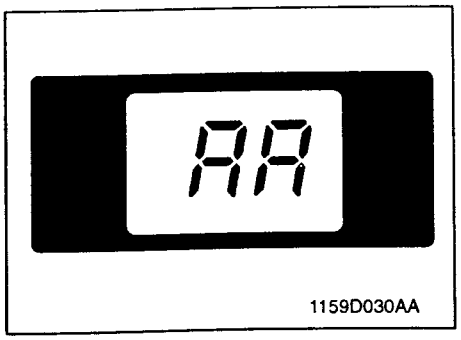

"AA" will appear in the Display Panel.

6. Press the Start Key to and use the Copy Quantity and Zoom Keys to change the settings for the Leading Edge Erase Width Adjustment.
7. Press the Clear/Stop Key to set the settings.

Setting Instructions

- If dimention A on the copy is longer than 4.0 mm, increase the setting value.
- If dimention A on the copy is Shorter than 3.0 mm, decrease the setting value.

* If the measurement does not fall within the specifications through one setting, try another setting.

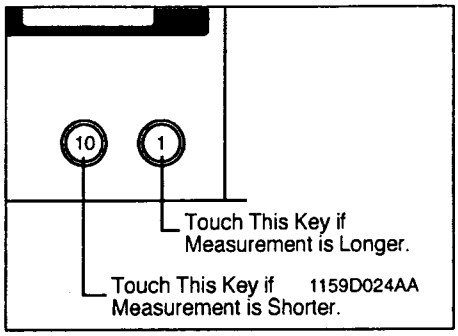

8. After the adjustments have been made, press the Clear/Stop Key to restore the copier to the normal copy mode.

(12) Adjustment of Edge Erase (EP1031/EP1031F only)

◆ **Requirement**

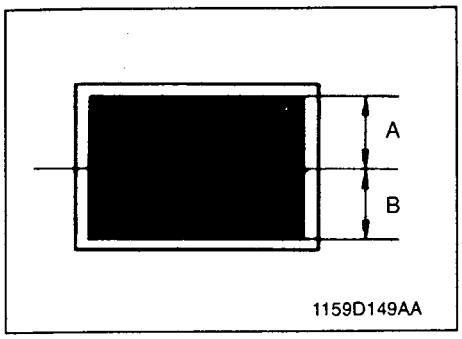

- Ready a test chart as shown on the left. Adjust so that the difference between widths A and B in the illustration on the left falls within the following specifications on the copy made at × 0.64.
- Specification ..... B Width – A Width = ± 1.0 mm

NOTE

Width A plus B must be 120 mm or more.

◆ **Important**

- This adjustment should be made after the "adjustment of reference options".

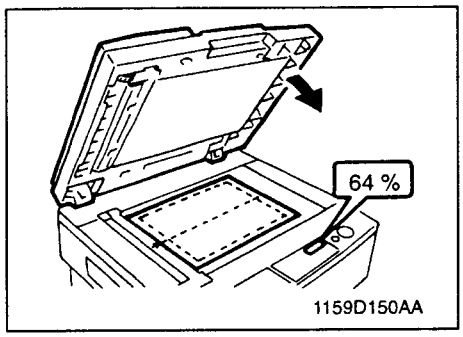

1. Place the Test Chart on the reference position for the Original Width Scale and close the Original Cover.
2. Make a one copy using A4 or 8-1/2" × 14" paper at a reduction ratio of × 0.64.

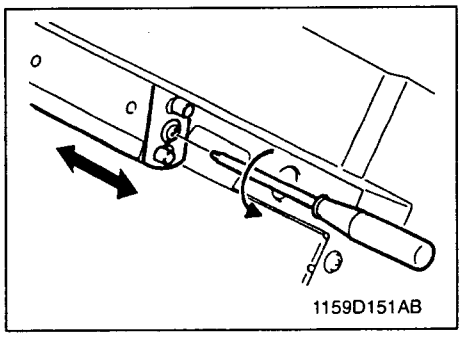

3. If the specifications are not met, adjust by moving the Edge Erase Lamp in the direction of the arrow.

(13) Adjustment of SDH Reference Position (EP1030F/EP1031F Only)

◆ **Requirement**

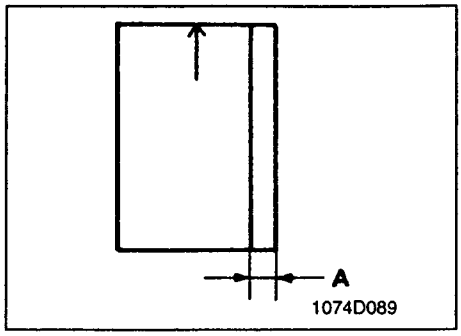

- As shown in the illustration on the left, use a A4 test chart or a sheet of 8-1/2" × 14" paper to draw a reference line 20 mm from the left edge.
- Specification ..... 20 ± 2.0 mm

◆ **Important**

- This adjustment should be made after the "adjustment zoom ratio in the crosswise direction".

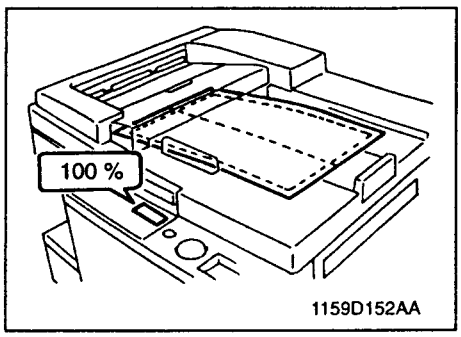

1. Place the test chart in the SDH.
2. Make a one copy using A4 or 8-1/2" × 14" paper at a 1:1 zoom ratio
3. Check that the reference line for the Test Chart on the copy is within the standards.

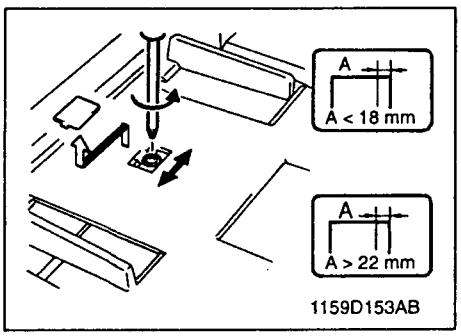

4. If the reference position falls outside the specifications, remove the Ornament Cover and loosen the SDH Cover mounting screw; then, move the mounting screw as shown for adjustment.

Adjusting Instructions

Relation between the width on the chart and the width on the copy.

18 mm or less	Move the mounting screw towards the front.
22 mm or more ...	Move the mounting screw towards the back.

(14) Adjustment of SDH Leading Edge Registration (EP1030F/EP1031F Only)

◆ **Requirement**

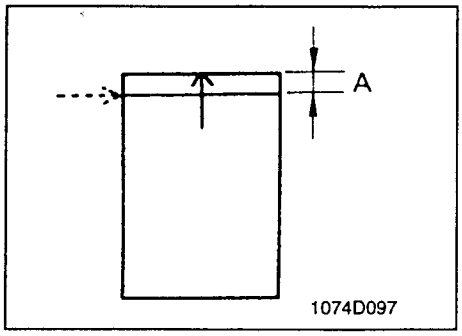

- As shown in the illustration on the left, use a A4 test chart or a sheet of 8-1/2" × 14" paper to draw a reference line 20 mm from the leading edge.
  Adjust so that on the copy, the width of A at the center section of the leading edge of the test chart will be within the specification shown below.

- Specification ... 20 ± 2.0 mm

◆ **Important**

- This adjustment should be made after the adjustment of the Leading Edge Registration on the main unit and the adjustment of the Feed Direction Zoom Ratio.

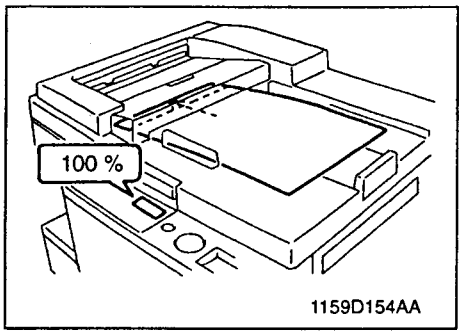

1. Place the test chart in the SDH.
2. Make a one copy using A4 or 8-1/2" × 14" paper at a 1:1 zoom ratio.
3. If the leading edge registration of the copy is outside the standards, use the following procedure to adjust.

4. Set to Service Mode.
5. To adjust the A8 SDH Registration, press the following keys in the indicated sequence: Copy Quantity and Zoom Key ① two times; the Start Key one time and the Copy Quantity and Zoom Key ① six times.

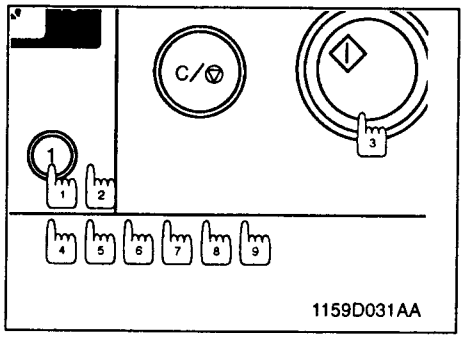

Press the Keys in order of [1], [2], [3], [4], [5], [6], [7], [8], and [9].

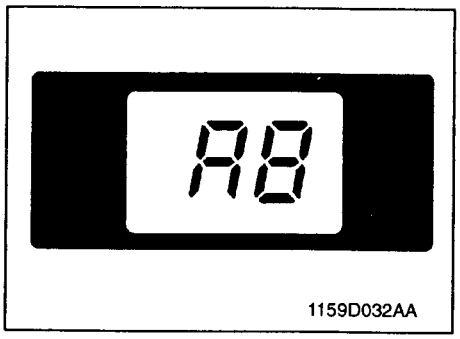

"A8" will appear in the Display Panel.

6. Press the Start Key to and use the Copy Quantity and Zoom Keys to change the settings for the SDH Registration Adjustment.
7. Press the Clear/Stop Key to set the settings.

Setting Instructions

- If dimention A on the copy is longer than 22 mm, increase the setting value.
- If dimention A on the copy is Shorter than 18.5 mm, decrease the setting value.

* If the measurement does not fall within the specifications through one setting, try another setting.

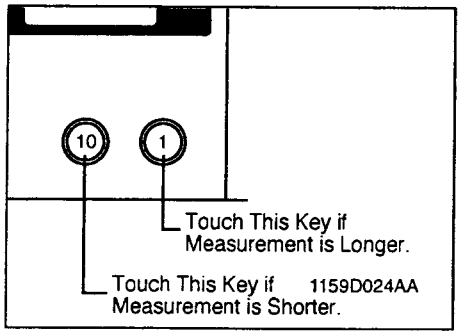

8. After the adjustments have been made, press the Clear/Stop Key to restore the copier to the normal copy mode.

(15) Adjustment of SDH Center Alignment (EP1030F/EP1031F Only)

◆ **Requirement**

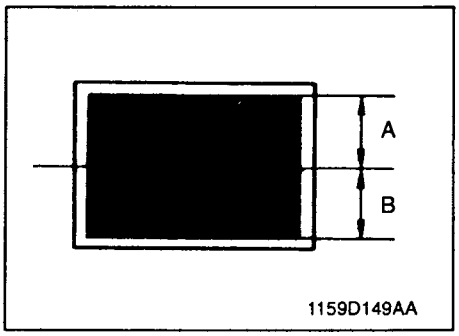

- As shown in the illustration to the left, use a Test Chart and adjust so that deviation of the lengths of Width A and Width B on the copy will be within the Specification shown below.
- Specification ... B Width – A Width = ± 1.0 mm

NOTE

Width A plus B must be 120 mm or more.

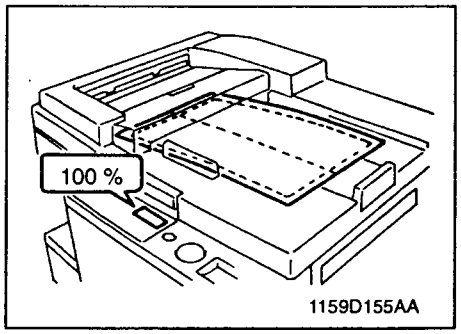

1. Place the test chart in the SDH.
2. Make a one copy using A4 or 8-1/2" × 14" paper at a 1:1 zoom ratio.
3. Check that the reference line for the Test Chart on the copy is within the standards.

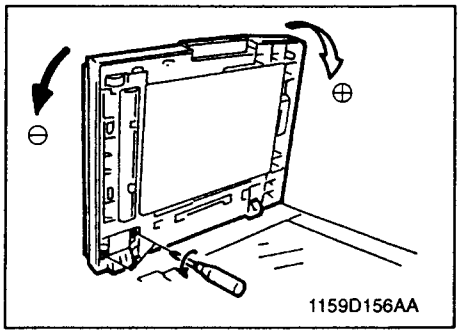

4. If the reference position is outside the standards, loosen the two mounting screws on the left side of the SDH and move it in the direction shown by the arrow in the illustration.

Adjusting Instructions

If the deviation of the length of Width A and Width B on the Chart is

+ ..... Move the SDH to the right.

– ..... Move the SDH to the left.

3-5. OTHER ADJUSTMENT

(1) Adjustment of the Scanner/Mirrors Carriage Position

1. Swing down the Front Door.
2. Release and swing up the Upper Half of the copier.
3. Remove three screws and the Rear Cover.
4. Remove four screws and the Upper Left Cover.
5. Remove one screw and the Upper Front Left Cover.
6. Swing down and lock the Upper Half of the copier.
7. Remove two screws and the Original Width Scale.
8. Remove the SDH Glass. (EP1030F/EP1031F Only)
9. Remove the Original Glass.

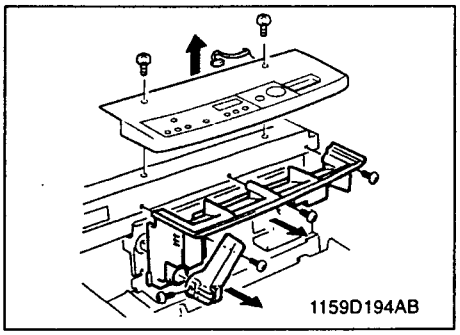

10. Remove one screw, one connector, and the control panel.
11. Remove one screw and the Lock Release Lever.
12. Remove three screws and Panel Lower Cover.

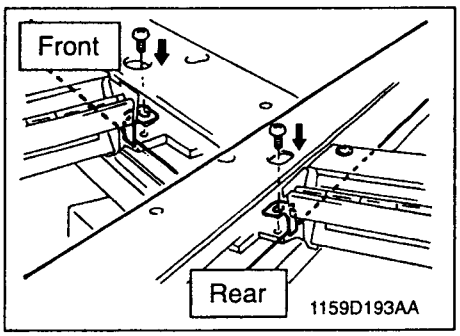

13. Temporarily secure the set screws of the Scanner Fixing Brackets at the front and rear to the Scanner.

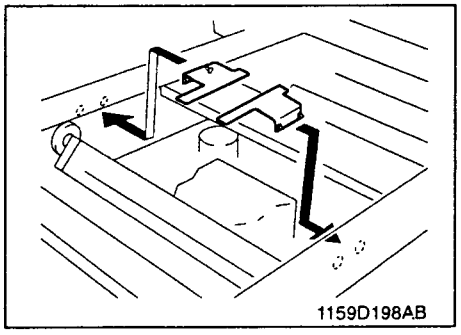

14. Fit the Scanner/Mirrors Carriage Positioning Jigs between the Scanner and Mirrors Carriage.

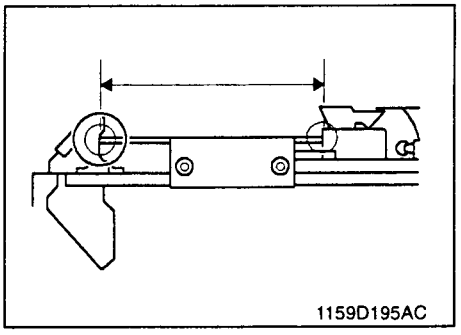

15. Loosen the fixing bracket set screws and press the Mirrors Carriage up against the Positioning Jigs and Scanner.
16. Tighten the fixing bracket set screws to the specified torque.

3-6. POWER SOURCE VOLTAGE ROOT-MEAN-SQUARE-VALUE-TO-MEAN-VALUE CONVERSION TABLE

When using the testers, voltmeters, or multimeters which show only the mean value, not Rms values, carry out the following procedure.

1. Measure the line voltage.
2. Referring to the Mean Value Chart corresponding to each voltage area, see the figure under the voltage obtained in step 1.

If the line voltage is 125 V and Rms value is 80 V, for example, the mean value is 53.5 V.
Therefore, it is recommended that the voltage be adjusted so that the mean value is set as close to 53.5 V as possible.

MEAN VALUE
CHART FOR 115/120/127V AREAS

V / Rms	104	105	106	107	108	109	110	111	112	113	
80	59.5	59.2	58.5	58.5	58.0	57.7	57.5	57.2	56.8	56.5	MEAN VALUE

V / Rms	114	115	116	117	118	119	120	121	122	123	
80	56.2	56.0	55.7	55.5	55.2	55.0	54.2	54.5	54.2	54.0	MEAN VALUE

V / Rms	124	125	126	127	128	129	130	131	132	133	
80	53.7	53.5	53.3	53.2	52.8	52.7	52.5	52.2	52.0	51.8	MEAN VALUE

V / Rms	134	135	136	137	138	139	140	
80	51.7	51.5	51.3	51.2	51.0	50.8	50.7	MEAN VALUE

MEAN VALUE
CHART FOR 200/220/240V AREAS

V / Rms	180	181	182	183	184	185	186	187	188	189	
160	132.7	132.0	131.4	130.7	130.1	129.6	129.0	128.4	127.9	127.2	MEAN VALUE

V / Rms	190	191	192	193	194	195	196	197	198	199	
160	126.7	126.2	125.7	125.2	124.7	124.4	123.9	123.5	123.0	122.6	MEAN VALUE

V / Rms	200	201	202	203	204	205	206	207	208	209	
160	122.2	121.7	121.2	120.9	120.5	120.2	119.7	119.4	119.0	118.7	MEAN VALUE

V / Rms	210	211	212	213	214	215	216	217	218	219	
160	118.2	118.0	117.6	117.2	116.9	116.6	116.2	115.9	115.6	115.2	MEAN VALUE

V / Rms	220	221	222	223	224	225	226	227	228	229	
160	115.0	114.7	114.4	114.1	113.7	113.5	113.2	112.9	112.7	112.4	MEAN VALUE

V / Rms	230	231	232	233	234	235	236	237	238	239	
160	112.1	111.7	111.6	111.2	111.0	110.7	110.5	110.2	110.0	109.7	MEAN VALUE

V / Rms	240	241	242	243	244	245	246	247	248	249	
160	109.5	109.2	109.0	108.7	108.6	108.2	108.1	107.9	107.6	107.4	MEAN VALUE

V / Rms	250	251	252	253	254	255	256	257	258	259	
160	107.2	107.0	106.7	106.5	106.2	106.1	105.9	105.7	105.5	105.2	MEAN VALUE

V / Rms	260	261	262	263	264	265	266	267	268	269	
160	105.1	104.9	104.7	104.5	104.2	104.1	103.9	103.7	103.5	103.2	MEAN VALUE

V / Rms	270	271	272	273	274	
160	103.1	103.0	102.7	102.6	102.4	MEAN VALUE

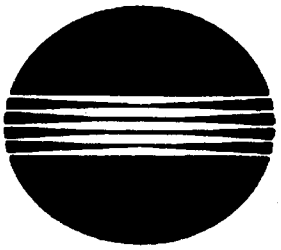

MINOLTA

Copyright
1997 MINOLTA Co., Ltd.
Printed in Japan

Use of this manual should be strictly supervised to avoid disclosure of confidential information.

MINOLTA CO., LTD.

1159-7992-11 97074370
Printed in Japan

1159SBS000AA

EP1030/EP1030F
EP1031/EP1031F

SWITCHES ON PWBs/ TECH. REP. SETTINGS

MINOLTA

CONTENTS

1 PRECAUTIONS FOR HANDLING THE PWBs S-1

1-1. Precautions for Transportation and Storage S-1
1-2. Precautions for Replacement and Inspection S-1

2 CONTROL PANEL KEYS AND INDICATORS S-2

- EP1031/EP1031F S-2
- EP1030/EP1030F S-4

3

4 USER MODE S-6

4-1. Functions Available from User Mode S-6
4-2. User Mode Setting Procedure S-6
4-3. User Mode Setting Details S-6

5 SERVICE MODE S-7

5-1. Service Mode Function Tree S-7
5-2. Entering the Service Mode S-7
5-3. Counter Display Procedure S-8
5-4. Setting in the Service Mode S-9
1. Display S-9
2. Tech. Rep. Choice S-10
3. Adjust S-13
4. Test S-16

6 FUNCTION SETTING REQUIREMENTS AT REPLACEMENT OF PART ... S-18

1151SBS0100A

1 PRECAUTIONS FOR HANDLING THE PWBs

1151SBS0101A

1-1. Precautions for Transportation and Storage

a) Before transporting or storing the PWBs, put them in protective conductive cases or bags so that they are not subjected to high temperature (and they are not exposed to direct sunlight).

b) Protect the PWBs from any external force so that they are not bent or damaged.

c) Once the PWB has been removed from its conductive case or bag, never place it directly on an object that is easily charged with static electricity (such as a carpet or plastic bag).

d) Do not touch the parts and printed patterns on the PWBs with bare hands.

1151SBS0102A

1-2. Precautions for Replacement and Inspection

a) Whenever replacing the PWB, make sure that the power cord of the copier has been unplugged.

b) When the power is on, the connectors should never be plugged in or unplugged.

c) Use care not to strap the pins of an IC with a metal tool.

d) When touching the PWB, wear a wrist strap and connect its cord to a securely grounded place whenever possible. If you cannot wear a wrist strap, touch the metal part to discharge static electricity before touching the PWB.

2 CONTROL PANEL KEYS AND INDICATORS

* For more details, see the "Operator's Manual" shipped with the copier.
  - (EP1031/EP1031F)

[1] Paper Source Key

- Selects the paper source.

[2] Clear/Stop Key

- Returns the copy setting to one (1). Returns the zoom ratio to 100% and stops the copying operation.

[3] Start Key

- Starts the copying operation.

[4] Copy Quantity and Zoom Keys

- Used to set the number of copies to be made and manual zoom settings. When used for setting the number of copies, the number in the display panel will increase by one each time the one (1) key is pressed and increase by ten each time the ten (10) key is pressed.
- When used to set the zoom ratio, the number in the display panel will increase or decrease by one each time the respective key ⩔ ⩓ is pressed. The zoom range is from 64% to 156%.

[5] Copy Quantity/Zoom Selection Key

- Switches the operation of the 1 and 10 keys between copy quantity and zoom functions.

[6] Fixed Zoom Ratio Key

- Selects and displays a fixed zoom ratio setting.

[7] Exposure Control Keys

- ◁ ▷ : Controls the density of the copy image.
- ⓐ : For selecting the Auto Exposure/Manual Exposure Mode.

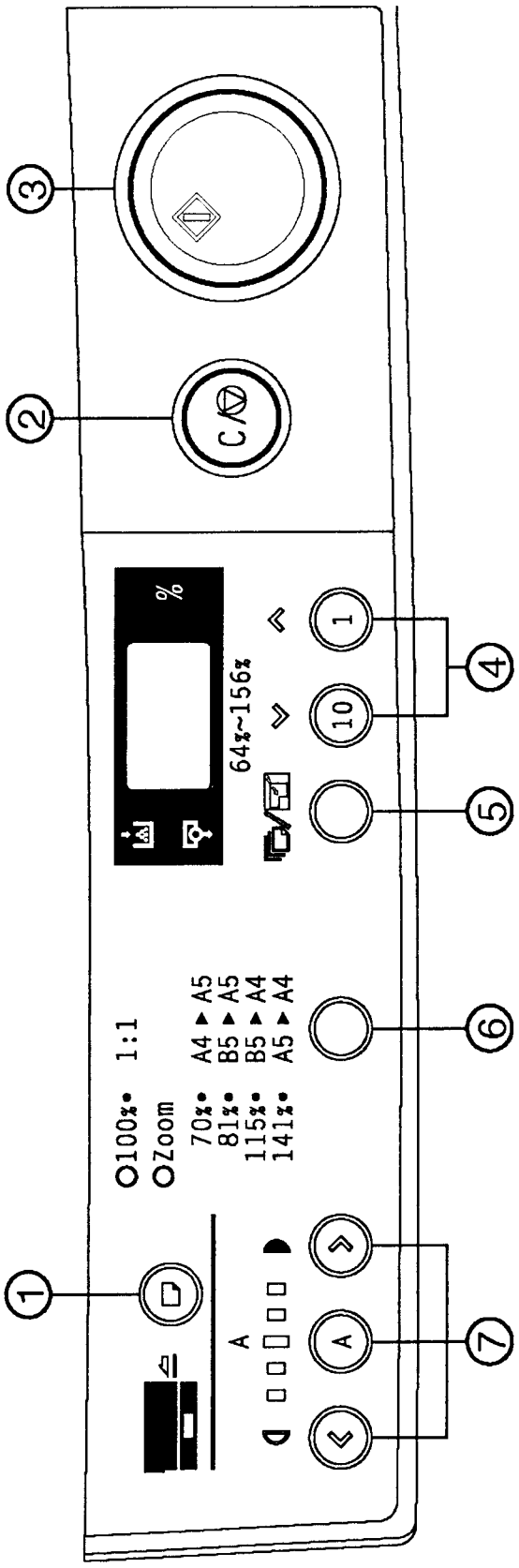
1159S007DA
100%
1:1
Zoom
70%
81%
115%
141%
A4 ▶ A5
B5 ▶ A5
B5 ▶ A4
A5 ▶ A4
%
64%~156%
1
10
A
C
1
2
3
4
5
6
7

* For more details, see the "Operator's Manual" shipped with the copier.

- (EP1030/EP1030F)

[1] Clear/Stop Key

- Returns the copy setting to one (1). Stops the copying operation.

[2] Start Key

- Starts the copying operation.

[3] Copy Quantity Keys

- Used to set the number of copies to be made. The number in the display panel will increase by one each time the one (1) key is pressed and increase by ten each time the ten (10) key is pressed.

[4] Exposure Control Keys

- ◁ ▷ : Controls the density of the copy image.
- ◬ : For selecting the Auto Exposure/Manual Exposure Mode.

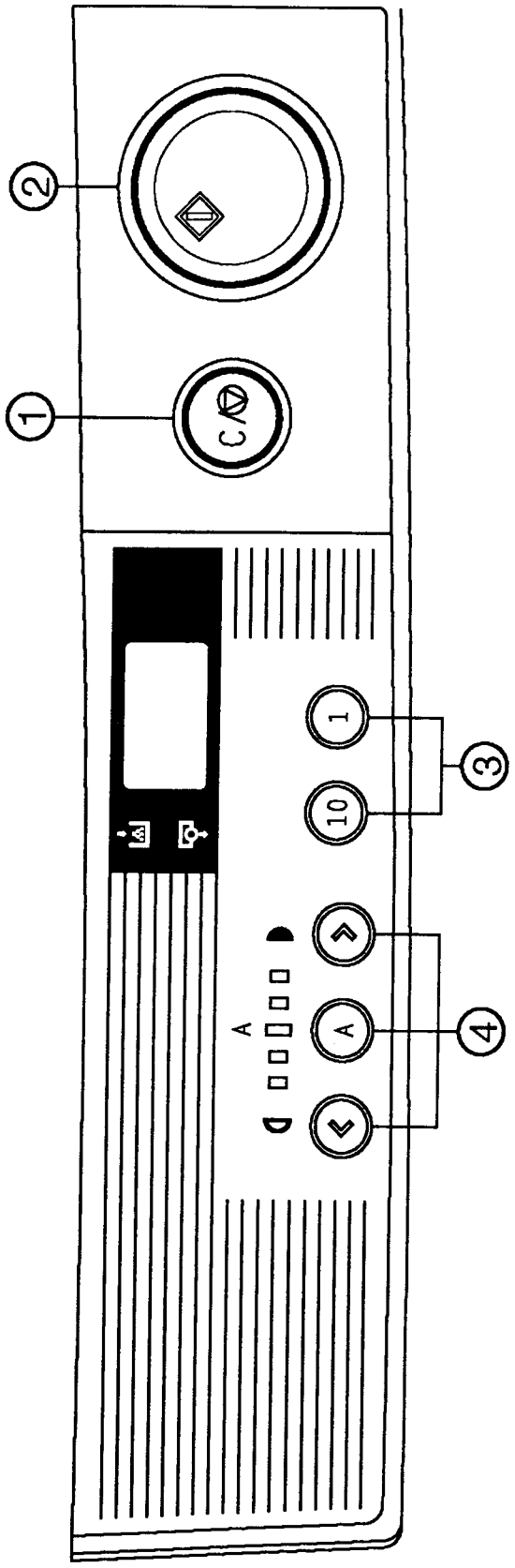
1159S005DA
2
1
C
1
10
3
A
4

1159SBS0400A

4 USER MODE

- This mode is used to make various setting to the User's needs.

1159SBS0401A

4-1. Functions Available from the User Mode

No.	Function
U1	Auto clear ON/OFF

1159SBS0402A

4-2. User Mode Setting Procedure

<Setting Procedure>

1. Holding down the Exposure Control Key (<), turn ON the Power Switch. ("U1" appears on the Display Panel.)
2. Press the Start Key to show the data set the selected function.
3. Using the Copy Quantity and Zoom Keys, change the set data.
4. Press the Clear/Stop Key to validate the new setting. (The function no. reappears.)

<Resetting Procedure>

- Press the Clear/Stop Key to quit the User Mode.

[User Mode]

1159SBS0403A

4-3. User Mode Setting Details

<table>
<tr><th>Function No.</th><th>Setting (The default is Highlighted .)</th></tr>
<tr><td>U1</td><td><Auto clear ON/OFF>
Select whether or not to activate the auto clear (panel reset) function after the lapse of a given period of time after a copy cycle has been completed or a key on the control panel has been operated.
<table>
<tr><th>Data</th><th>Description</th><th>Data</th><th>Description</th></tr>
<tr><td>0
0.5
1</td><td>Disabled
Enabled : 30 sec.
Enabled : 1 min.</td><td>2
3
4</td><td>Enabled : 2 min.
Enabled : 3 min.
Enabled : 4 min.</td></tr>
</table>
</td></tr>
</table>

1159SBS0500A

5 SERVICE MODE

- This mode is used by the Tech. Rep. to set, check, adjust, and/or program various service functions.

1159SBS0501A

5-1. Service Mode Function Tree

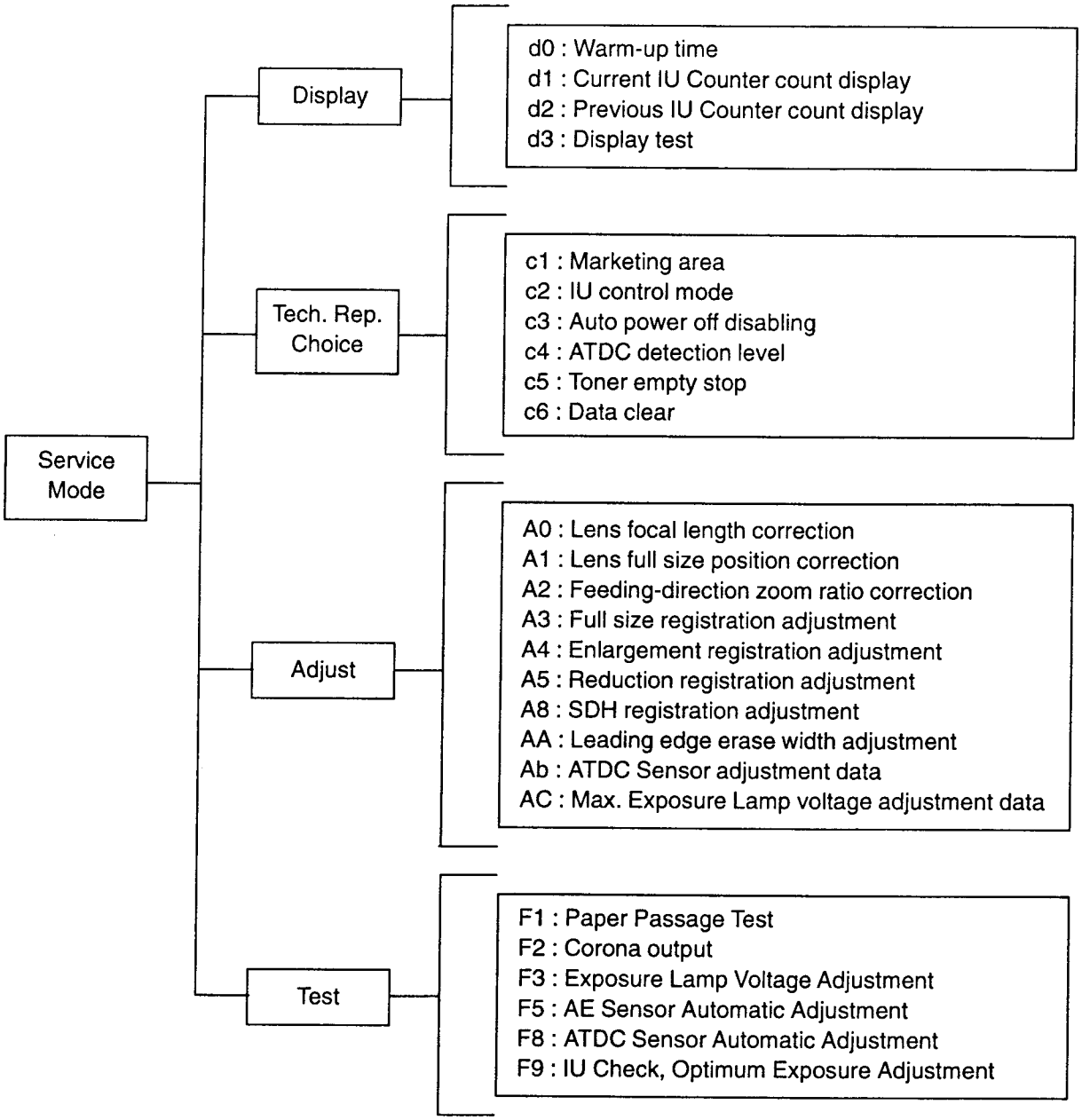

1159SBS0502A

5-2. Entering the Service Mode

<Setting Procedure>

1. Perform the following steps to set the copier in to Service Mode.

   Clear Stop Key ON ➡ Exposure Control Key ⓒ ON ➡ Clear Stop Key ON ➡
   ➡ Exposure Control Key ⓒ ON

2. Select the Service Mode function using the Copy Quantity and Zoom Key ① and then press the Start Key. (The functions are shown in the order of d, c, A, and F.)

<Leaving Service Mode>

- Press the Clear/Stop Key twice to quit the Service Mode.

1159SBS0503A

5-3. Counter Display Procedure

<Display Procedure>

1. Hold down the Clear/Stop Key for 3 sec. → The Total Counter count appears.
2. Hold down the Clear/Stop Key for another 3 sec. → The IU Counter or CP Counter appears.

<Display Example>

The counter reading is shown on the Display Panel in the following order.

- Total Counter

(Example : 1234)

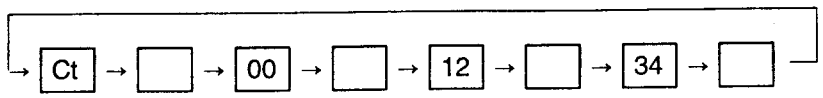

Note: The IU Counter count is displayed when "0" is set for "c2" and CP Counter counter is displayed when "1" is set for "c2".

1159SBS0504A
5-4. Setting in the Service Mode

1159SBS050401A
1. Display

- This function tests for display of the warming-up time, current IU Counter, previous IU Counter, and the control panel.

<Setting Procedure>

1. Select the Display mode. ("d0" appears on the Display Panel.)
2. Select the function to be checked or set using the Copy Quantity and Zoom Key ① and press the Start Key.
3. Press the Clear/Stop Key to stop the display sequence.

<Leaving the Function>

- Select the next Display subfunction using the Copy Quantity and Zoom Key ① or press the Clear/Stop Key to quit the Display function.

[Service Mode ▶ Display]

Display Function	Setting
d0	<Warm-up time> Displays the warm-up time on the Display Panel.
d1	<Current IU Counter count display> Displays the count of the current IU Counter on the Display Panel.
d2	<Previous IU Counter count display> Displays the count of the previous IU Counter on the Display Panel.
d3	<Display test> Blinks all LEDs on the control panel other than the ready indicator.

<Display Example>

The warm-up time and IU Counter count are shown on the Display Panel in the following order.

- Warm-up time display

(Example : 46.50 sec.)

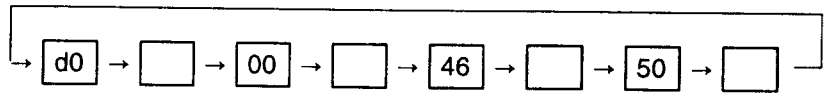

- IU Counter count display

(Example : 12034)

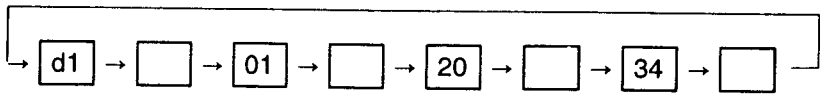

1159SBS050402A

2. Tech. Rep. Choice

- This function allows the Tech. Rep. to make various settings and adjustments.

<Setting Procedure>

1. Select the Tech. Rep. Choice function. ("c1" appears on the Display Panel.)
2. Select the subfunction to be set or adjusted using the Copy Quantity and Zoom Key ① and press the Start Key.
3. Change the set data as necessary using the Copy Quantity and Zoom Keys.
4. Press the Clear/Stop Key to validate the setting.

<Leaving the Function>

- Select the next Tech. Rep. Choice subfunction using the Copy Quantity and Zoom Key ① or press the Clear/Stop Key to quit the Tech. Rep. Choice function.

[Service Mode ▶ Tech. Rep. Choice]

<table>
<tr><th>Choice No.</th><th>Setting (The default is Highlighted.)</th></tr>
<tr><td>c1</td><td><Marketing area>
The correct fixed zoom ratios and paper sizes are selected according to the marketing area setting selected.
<table><tr><td>Data</td><td>0</td><td>1</td><td>2</td></tr><tr><td>Description</td><td>Metric areas</td><td>Inch areas</td><td>Factory</td></tr></table>Note: Do not select "2" for this subfunction.</td></tr>
<tr><td>c2</td><td><IU control mode>
Select whether to use the copier or Tech. Rep. to keep track of the replacement time of the IU.
<table><tr><td>Data</td><td>0</td><td>1</td></tr><tr><td>Description</td><td>IU control : Controlled by the IU life</td><td>PM control : Not controlled by the IU life</td></tr></table>Note: IU control = IU Counter; PM control = CP Counter</td></tr>
<tr><td>c3</td><td><Auto Power OFF Disabling>
Select whether to enable or disable the Auto Power OFF that is to be activated after the lapse of a given period of time after a copy cycle has been completed or a key pressed.
<table><tr><td>Data</td><td>0 ..... 3 ..... 12</td></tr><tr><td>Description</td><td>0 min. ..... 30 min. ..... 120 min.</td></tr></table></td></tr>
</table>

<table>
<tr><th>Choice No.</th><th>Setting (The default is Highlighted .)</th></tr>
<tr><td>c4</td><td>
<ATDC Detection Level>
Select the ATDC control level (T/C ratio).
<table>
<tr><th>Data</th><th>Description</th><th>Data</th><th>Description</th></tr>
<tr><td>40
45
50
55</td><td>T/C ratio 4.0%
T/C ratio 4.5%
T/C ratio 5.0%
T/C ratio 5.5%</td><td>60
65
70</td><td>T/C ratio 6.0%
T/C ratio 6.5%
T/C ratio 7.0%</td></tr>
</table>
</td></tr>
<tr><td>c5</td><td>
<Toner Empty Stop>
Select whether or not inhibit copying when a toner-empty condition is detected.
<table>
<tr><th>Data</th><td>0</td><td>1</td></tr>
<tr><th>Description</th><td>Inhibits copying.</td><td>Permits copying.</td></tr>
</table>
</td></tr>
<tr><td>c6</td><td>
<Data clear mode>
Select the type of settings that are to be reset to the initial values when the power is next turned ON (except for resetting a misfeed).
Note that "machine setting" and "all counters" can be selected when the Auto Exposure (A) indicator is lit.
<table>
<tr><th>Data</th><th>Description</th><th>Data</th><th>Description</th></tr>
<tr><td>0
1
2</td><td>None
CP counter
CP-related counters</td><td>3
4
5</td><td>Choice
Machine setting
All counters</td></tr>
</table>
Note: Enabled when "1" is set for Tech. Rep. Choice "c2."
</td></tr>
</table>

<Details of Data Cleared>

	Item / Description	User Mode	Tech. Rep. Choice	Adjust	Counter
CP counter	CP counter				○
CP-related counters	IU counter				○
	CP counter				○
	PC rotation time counter				○
	Exposure age correction counter				○
Choice	Manual central exposure setting voltage	○			
	AE input level	○			
	Auto clear (U1)	○			
	Marketing area (c1)		○		
	IU control mode		○		
	Auto power off disabling (c3)		○		
	ATDC detection level (c4)		○		
	Toner empty stop (c5)		○		
Machine setting	Lens focal length correction (A0)			○	
	Lens full size position correction (A1)			○	
	Feeding-direction zoom ratio correction (A2)			○	
	Full size registration adjustment (A3)			○	
	Enlargement registration adjustment(A4)			○	
	Reduction registration adjustment (A5)			○	
	SDH registration adjustment (A8)			○	
	Leading edge erase width adjustment (AA)			○	
	ATDC Sensor adjustment (Ab)			○	
	Max. Exposure Lamp voltage adjustment (AC)			○	
All counters	Total counter				○
	CP counter				○
	PC rotation time counter				○
	Exposure age correction counter				○
	IU counter				○

○ : Cleared

Note: CP-related counters: Cleared only in PM control mode.

3. Adjust

- This function allows the Tech. Rep. to set the correction values for making up for machine-to-machine variations.

<Setting Procedure>

1. Select the Adjust function. ("A0" appears on the Display Panel.)
2. Select the subfunction to be set or adjusted using the Copy Quantity and Zoom Key ① and press the Start Key.
3. Change the set data as necessary using the Copy Quantity and Zoom Keys.
4. Press the Clear/Stop Key to validate the setting.

<Leaving the Function>

- Select the next Adjust subfunction using the Copy Quantity and Zoom Key ① or press the Clear/Stop Key to quit the Adjust function.

[Service Mode ▶ Adjust Mode]

<table>
<tr><th>Adjust Mode</th><th>Setting (The default is Highlighted .)</th></tr>
<tr><td>A0</td><td><Lens focal length correction>
Corrects variations in the Lens focal length (according to the grouping of the Lenses).
<table><tr><td>Data</td><td>49</td><td>50</td><td>51</td></tr><tr><td>Description</td><td>Short focal length (–)</td><td>Standard (0)</td><td>Long focal length (+)</td></tr></table></td></tr>
<tr><td>A1</td><td><Lens full size position correction>
Corrects the zoom ratio in the crosswise direction by varying the Lens full size position.
<table><tr><td>Data</td><td>33 .... 50 .... 67</td></tr><tr><td>Description</td><td>0 steps .... (Reduction direction) 17 steps .... 38 steps (Enlagement direction)</td></tr></table></td></tr>
<tr><td>A2</td><td><Feeding-direction zoom ratio correction>
Corrects the zoom ratio in the feeding direction by varying the scan speed.
<table><tr><td>Data</td><td>43 .... 50 .... 57</td></tr><tr><td>Description</td><td>–2.1% .... (Reduction direction) ±0% .... +2.1% (Enlagement direction)</td></tr></table></td></tr>
</table>

<table>
<tr><th>Adjust Mode</th><th>Setting (The default is Highlighted .)</th></tr>
<tr><td>A3</td><td>
<Full size registration adjustment>
Corrects registration between the leading edge of the original and that of the image in the full size made by varying the Synchronizing Roller start timing.
<table>
<tr><td>Data</td><td>26 .... 50 .... 74</td></tr>
<tr><td>Description</td><td>–0.6 mm .... ±0 mm .... +6.0 mm
(Smaller deviation) (Greater deviation)</td></tr>
</table>
</td></tr>
<tr><td>A4</td><td>
<Enlargement registration adjustment>
Corrects registration between the leading edge of the original and that of the image in an enlargement made by varying the Synchronizing Roller start timing.
<table>
<tr><td>Data</td><td>42 .... 50 .... 58</td></tr>
<tr><td>Description</td><td>–2.0 mm .... ±0 mm .... +2.0 mm
(Smaller deviation) (Greater deviation)</td></tr>
</table>
</td></tr>
<tr><td>A5</td><td>
<Reduction registration adjustment>
Corrects registration between the leading edge of the original and that of the image in a reduction made by varying the Synchronizing Roller start timing.
<table>
<tr><td>Data</td><td>42 .... 50 .... 58</td></tr>
<tr><td>Description</td><td>–2.0 mm .... ±0 mm .... +2.0 mm
(Smaller deviation) (Greater deviation)</td></tr>
</table>
</td></tr>
<tr><td>A8</td><td>
<SDH registration adjustment>
Corrects registration between the leading edge of the original fed via the SDH and that of the image by varying the SDH Registration Roller start timing.
<table>
<tr><td>Data</td><td>10 .... 50 .... 90</td></tr>
<tr><td>Description</td><td>–10 mm .... ±0 mm .... +10 mm
(Smaller deviation) (Greater deviation)</td></tr>
</table>
</td></tr>
</table>

<table>
<tr><th>Adjust Mode</th><th>Setting (The default is Highlighted .)</th></tr>
<tr><td>AA</td><td><Leading edge erase width adjustment>
Corrects the leading edge erase width by varying the Imag Erae Lamp ON timing.
<table><tr><td>Data</td><td>38 .... 60 .... 62</td></tr><tr><td>Description</td><td>−11.0 mm .... (Smaller width) ±0 mm .... +4.0 mm (Greater width)</td></tr></table></td></tr>
<tr><td>Ab</td><td><ATDC Sensor adjustment data>
Manually enter the setting value previously recorded when the starter has been changed or the setting value data automatically set by an F8 operation is cleared.
NOTE
For details, see DIS/REASSEMBLY, ADJUSTMENT.</td></tr>
<tr><td>AC</td><td><Max. Exposure Lamp voltage adjustment data>
Manually enter the setting value previously recorded if the max. Exposure Lamp voltage adjustment data set by an F3 operation is cleared with Data Clear of Tech. Rep. Choice.
NOTE
For details, see DIS/REASSEMBLY, ADJUSTMENT.</td></tr>
</table>

1159SBS050404A

4. Test

- This function allows the Tech. Rep. to perform various functional test and adjustment.

<Setting Procedure>

1. Select the Test function. ("F1" appears on the Display Panel.)
2. Select the subfunction to be adjusted or checked using the Copy Quantity and Zoom Key ① and press the Start Key.

<Leaving the Function>

- Select the next Test subfunction using the Copy Quantity and Zoom Key ① or press the Clear/Stop Key to quit the Test function.

[Service Mode ▶ Test]

Test No.	Description
F1	<Paper Passage Test> This test moves the paper through the copier for correct passage. <Procedure> 1. Press the Start Key to start the sequence. 2. Press the Clear/Stop Key to stop the sequence.
F2	<Corona output> Do not use this test as it is only for factory adjustment.
F3	<Exposure Lamp Voltage Adjustment> This test allows the Tech. Rep. to adjust the maximum Exposure Lamp voltage and the optimum exposure setting in the Manual Exposure mode. (It runs for 30 sec.) ***NOTE*** *For details, see DIS/REASSEMBLY, ADJUSTMENT.*
F5	<AE Sensor Automatic Adjustment> This test automatically adjusts the AE sensor. (It runs for 5 sec.) ***NOTE*** *For details, see DIS/REASSEMBLY, ADJUSTMENT.*
F8	<ATDC Sensor Automatic Adjustment> This test automatically adjusts the ATDC sensor. ***NOTE*** *For details, see DIS/REASSEMBLY, ADJUSTMENT.*
F9	<IU Check, Optimum Exposure Adjustment> Do not use this test as it is only factory adjustment.

[Service Mode ▶ Test]
– Components Energized in the Test –

Test Operation / Component	F1	F2	F3	F5	F8	F9
Main Drive Motor	○	○	○	○	○	○
PC Drum Charge	○	○	○	○	○	○
Grid	–	○	–	–	–	○
Bias	○	○	○	○	○	○
Exposure Lamp	○	–	○	○	–	○
Edge Erase Lamp	–	–	–	–	–	–

○ : Energized – : Remain deenergized

6 FUNCTION SETTING REQUIREMENTS AT REPLACEMENT OF PART

- If a part is replaced as part of troubleshooting and other service jobs, some parts require that a Test operation be run and data values reentered and/or cleared.

Function \ Replacement Part	PC Drum	IU	Starter (*3)	Exposure Lamp (*4)	AE Sensor	Power Unit	PWB-A (*5)
F3 (MAX)				○1		○1	(*6)
F3 (Manual)	○2	○1		○2		○2	
F5 (Auto)	○3	○2			○		○
F8 (ATDC)		○(*2)	○				(*7)
Cleaning of CP-related Counter (*1)	○1	○(*2)					○

○ : Required

○ Make the adjustments in numerical order.

*1: Clear the CP-related counter, select "2: CP-related counter" in the Data Clear mode (c6) of Tech. Rep. Choice mode, then switch the power off/on.
*2: When replacing the IU, F8 and CP-related counter are automatically cleared.
*3: Including the replacement of the ATDC Sensor.
*4: Including the Cleaning of Lamp Regulator and optical system.
*5: When replacing PWB-A, if the EEPROM (IC3A) from the old PWB-A is installed on the new PWB-A, these adjustments are not necessary.
*6: Input the F3 setting on the factory label inside the front door.
*7: Input the Ab setting on the factory label inside the front door.

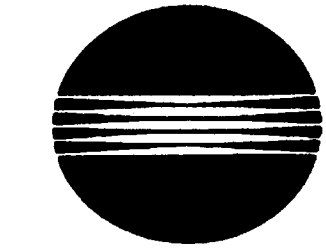

MINOLTA

Copyright
1997 MINOLTA Co., Ltd
Printed in Japan

Use of this manual should be strictly supervised to avoid disclosure of confidential information.

MINOLTA CO., LTD.

1159-7997-11 97074370
Printed in Japan

1159SBT000AA

EP1030/EP1030F
EP1031/EP1031F

TROUBLESHOOTING

MINOLTA

CONTENTS

1 INTRODUCTION

1-1. General Precautions ..... T- 1
1-2. How to Use This Book ..... T- 1
1-3. Reading the Text ..... T- 1

2 PAPER TRANSPORT FAILURE

2-1. Misfeed Detection Types and Detection Timings ..... T- 2
2-2. Misfeed Clearing Procedures ..... T- 4
1) Copier Paper Take-Up Misfeed ..... T- 4
2) Transport Misfeed ..... T- 6
3) Multi Bypass Misfeed (EP1031/EP1031F) ..... T- 8
4) Exit Misfeed T-10
5) SDH Misfeed (EP1031/EP1031F) T-12

3 MALFUNCTIONS

3-1. Detection Timings Classified by Malfunction Codes T-14
3-2. Troubleshooting Procedures T-16
1) C00: Main Drive Motor's Failure to Turn T-16
2) C04: Ozone Fan Motor's Failure to Turn T-17
3) C40: Exposure Lamp Malfunction T-18
4) C50: Warming-up Failure T-19
C51: Abnormally Low Fusing Temperature T-20
C52: Abnormally High Fusing Temperature T-20
5) C60: Scanner Drive Malfunction T-21
C61: Lens Drive Malfunction (EP1031/EP1031F) T-22
6) CF1: AE Sensor Malfunction T-23
7) CF3: ATDC Sensor Malfunction T-24
8) E0: EEPROM Malfunction T-25
9) E1: IU Toner Detection Failure T-26
E2: Blown IU Fuse Detection Failure T-26
3-3. Power Malfunctions T-27

4

5	IMAGE FAILURE

5-1. Image Failure Troubleshooting T-28
5-2. Initial Checks T-28
5-3. Troubleshooting Procedures Classified by Image Failure T-29

1139SBT0100A

1 INTRODUCTION

1159SBT0101A

1-1. General Precautions

1. When servicing the copier with its covers removed, use utmost care to prevent your hands, clothing, and tools from being caught in revolving parts including the chains and gears.
2. Before attempting to replace parts and unplug connectors, make sure that the power cord of the copier has been unplugged from the wall outlet.
3. Never create a closed circuit across connector pins except those specified in the text and on the printed circuit.
4. When creating a closed circuit and measuring a voltage across connector pins specified in the text, be sure to use the green wire (GND).
5. When the user is using a word processor or personal computer from a wall outlet of the same line, take necessary steps to prevent the circuit breaker from opening due to overloads.
6. Keep all disassembled parts in good order and keep tools under control so that none will be lost or damaged.
7. Adjust, choice, count, and other types of data are stored in TC3 (EEPROM) on Master Board PWB-A. Keep this in mind and take necessary precautions when replacing PWB-A.

1139SBT0102A

1-2. How to Use This Book

1. If a component on a PWB or any other functional unit including a motor is defective, the text only instructs you to replace the whole PWB or functional unit and does not give troubleshooting procedures applicable within the defective unit.
2. All troubleshooting procedures contained herein assume that there are no breaks in the harnesses and cords and all connectors are plugged into the right positions.
3. For the removal procedures of covers and parts, see DIS/REASSEMBLY, ADJUSTMENT.
4. The troubleshooting procedures are given in the order of greater frequency of trouble or order of operation.
5. The procedures preclude possible malfunctions due to noise and other external causes.

1139SBT0103A

1-3. Reading the Text

1. The paper transport failure troubleshooting procedures are given according to the symptom. First identify the location where the paper is present and start the procedure for that particular location. For malfunction troubleshooting, start with step 1 and onward.
2. Make checks in numerical order of steps and, if an item is checked okay, go to the next step.

Pattern 1

Step	Check Item	Result	Action
1	Is...?	YES	Do this.
2		↑	
	Go to step 2 if you answered NO.		

Pattern 2

Step	Check Item	Result	Action
1	Is...?	YES	Do this.
		NO	Check that.
2		↑	
	Go to step 2 if it checks okay.		

2 PAPER TRANSPORT FAILURE

1159SBT0201A

2-1. Misfeed Detection Types and Detection Timings

When a misfeed occurs, the corresponding misfeed code (the appropriate one of those shown below) starts blinking to let the user know where the misfeed has occurred.

Misfeed Code	Type	Detection Timing
PC	Paper take-up misfeed or Paper empty	• Paper Transport Sensor PC2 is not blocked (L) even after the lapse of approx. 3.3 sec. after Paper Take-Up Solenoid SL2 has been energized. • Paper Transport Sensor PC2 is not blocked (L) even after the lapse of approx. 1.6 sec. after Multi Bypass Paper Take-Up Solenoid SL3 has been energized.
J2	Transport misfeed	• Paper Exit Sensor PC3 is not blocked (L) even after the lapse of approx. 2 sec. after Registration Clutch CL1 has been energized. • PC2 is not unblocked (H) even after the lapse of approx. 2.9 sec. (Cassette) or 3.2 sec. (Manual by-pass) after Registration Clutch CL1 has been energized.
J3	Exit misfeed	• Paper does not move past Paper Exit Sensor PC3 even after the lapse of approx. 3 sec. after PC2 has been unblocked (H). • PC3 remains blocked for approx. 2 sec. after CL1 has been energized.
J8	SDH misfeed	• SDH Paper Transport Sensor PC23 is not blocked (L) even after the lapse of approx. 2.3 sec. after SDH Paper Take-Up Solenoid SL10 has been energized. • SDH Original Exit Sensor PC24 is not blocked (L) even after the lapse of approx. 1.3 sec. after SDH Registration Clutch CL10 has been energized. • PC23 is not unblocked (H) even after the lapse of approx. 4.4 sec. after CL10 has been energized. • PC24 is not unblocked (H) even after the lapse of approx. 1.7 sec. after PC23 has been unblocked (H).

<Misfeed Detecting Sensor Layout>

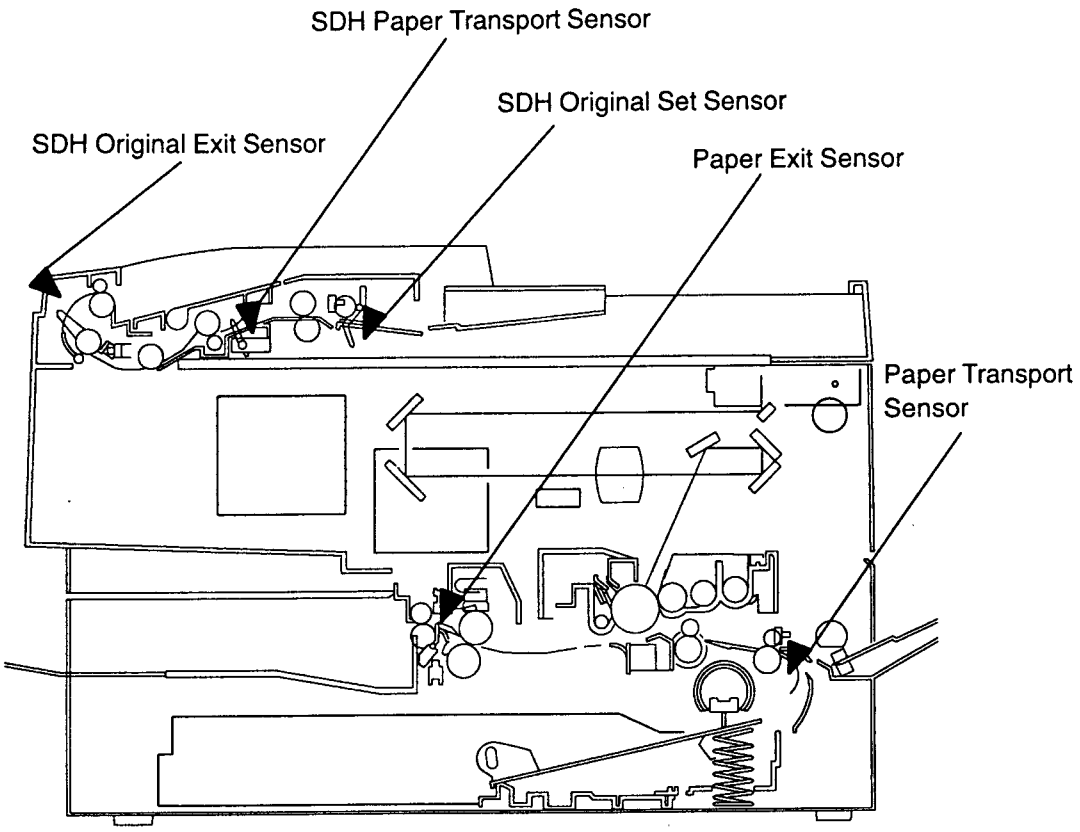

1159SBT0202A

2-2. Misfeed Clearing Procedures

1159SBT020201A

1) Copier Paper Take-Up Misfeed

Relevant Electrical Parts	
• Paper Transport Sensor (PC2)	• Paper Take-Up Solenoid (SL2) • Master Board (PWB-A)

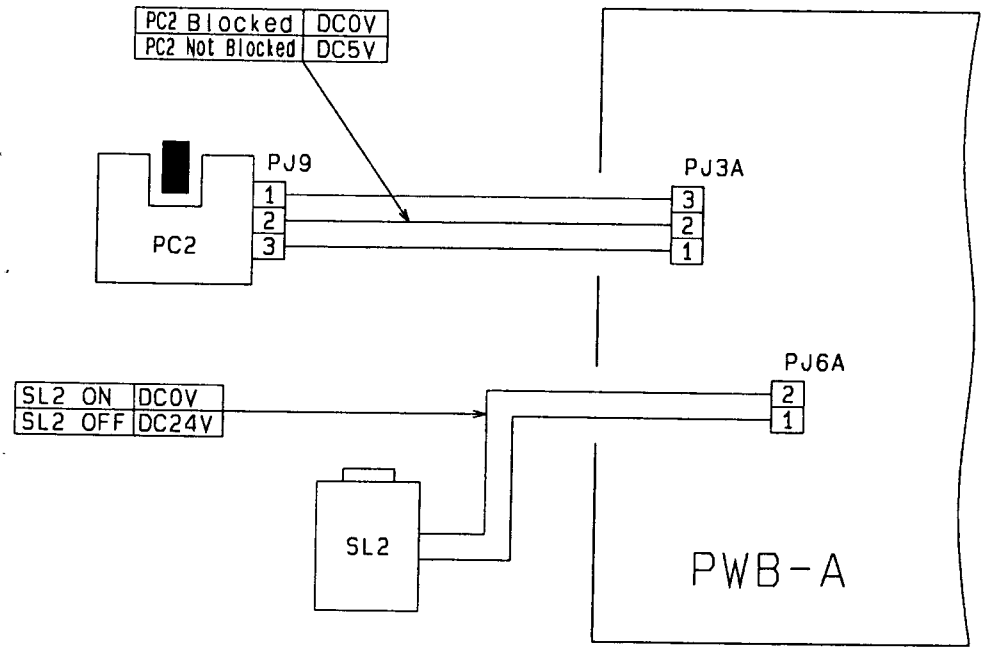

1159C01TAA

◆Copier Paper Take-Up Misfeed Clearing Procedure

Symptom	Step	Check Item	Result	Action
• Paper is not taken up at all.	1	Does the paper being used meet product specifications?	NO	Instruct the user to use the paper that meets product specifications.
	2	Is the paper curled, waved, or damp?	YES	Change the paper. Instruct the user in how to store the paper.
	3	Is the Paper Take-Up Roll deformed, worn, or dirty with paper dust?	YES	Clean or change the Paper Take-Up Roll.
	4	Check Paper Take-Up Solenoid SL2. Does the voltage across PJ6A-2 on PWB-A and GND change from DC24V to DC0V when the Start key is pressed?	YES	Change SL2.
			NO	Change PWB-A.
• Paper is stationary at the Transport Rollers.	1	Are the Transport Rollers deformed, worn, or dirty with paper dust?	YES	Clean or change the Paper Take-Up Roll.
	2	Does the voltage across PJ3A-2 on PWB-A and GND change from DC5V to DC0V when Paper Transport Sensor PC2 is blocked?	NO	Check the PC2 actuator for operation and, if it checks okay, change PC2.

2) Transport Misfeed

Relevant Electrical Parts	
• Paper Transport Sensor (PC2)	• Registration Clutch (CL1) • High Voltage Unit (HV1) • Master Board (PWB-A)

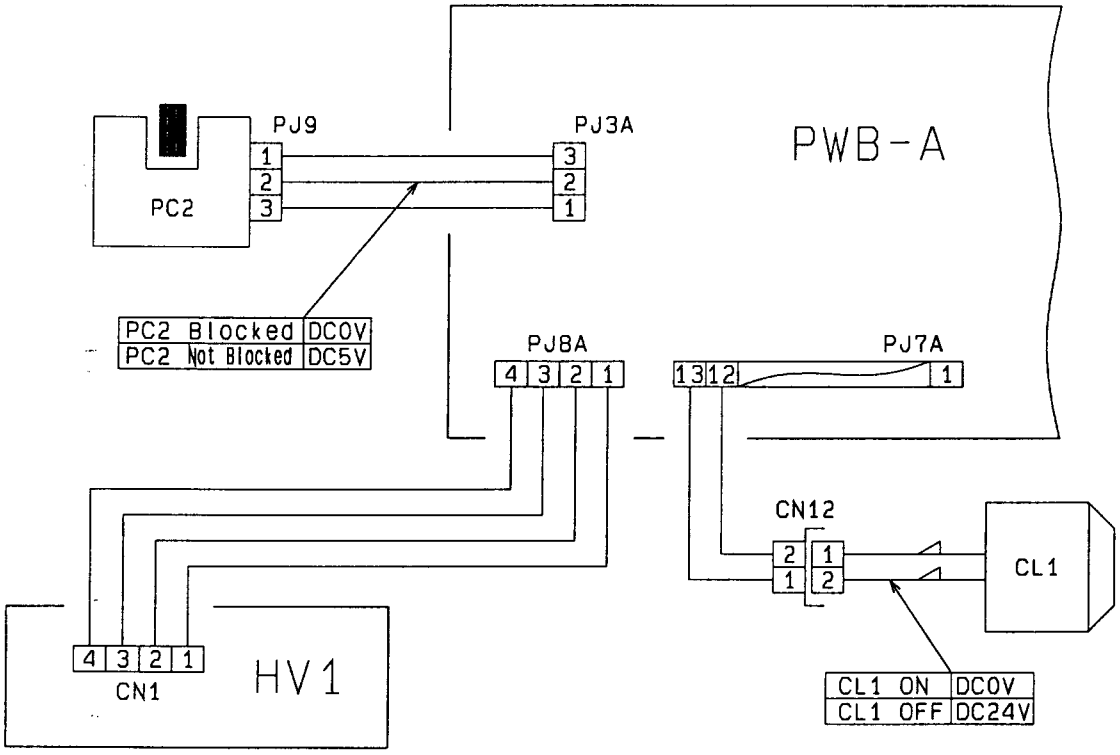

1159C02TAA

◆Transport Misfeed Clearing Procedure

Symptom	Step	Check Item	Result	Action
Paper is stationary at the Synchronizing Roller.	1	Is the paper curled, waved, or damp?	YES	Change the paper. Instruct the user in how to store the paper.
	2	Does the paper being used meet product specifications?	NO	Instruct the user to use the paper that meets product specifications.
	3	Check Registration Clutch CL1. Does the voltage across PJ7A-13 on PWB-A and GND change from DC24V to DC0V after the Start key has been pressed?	YES	Change CL2.
			NO	Change PWB-A.
	4	Does the voltage across PJ3A-2 on PWB-A and GND change from DC5V to DC0V when Paper Transport Sensor PC2 is blocked?	NO	Check the PC2 actuator for operation and, if it checks okay, change PC2.
Paper is stationary near the PC Drum.	1	Is the Pre-Image Transfer Guide Plate deformed or dirty?	YES	Clean or change the guide plate
	2	Is the Image Transfer Corona wire deteriorated or dirty?	YES	Clean or change the wire.
	3	Is the Comb Electrode deteriorated or dirty?	YES	Clean or change the Comb Electrode.
	4	Is the paper guide at the Paper Separator Corona deformed or dirty?	YES	Clean or change the paper guide.
	5	Are the Synchronizing Rollers deformed, worn, or dirty with paper dust?	YES	Clean or change the Synchronizing Rollers.
	6	Is paper wound around the PC Drum?	YES	Change the Image Transfer/ Paper Separator Coronas Assy or HV1.
Paper is stationary before the Fusing Unit.	1	Do the Fusing Rollers turn when the Main Drive Motor is energized?	NO	Check the drive transmission path.

3) Multi Bypass Misfeed

Relevant Electrical Parts	
• Paper Take-Up Sensor (PC2)	• Multi Bypass Paper Take-Up Solenoid (SL3) • Master Board (PWB-A)

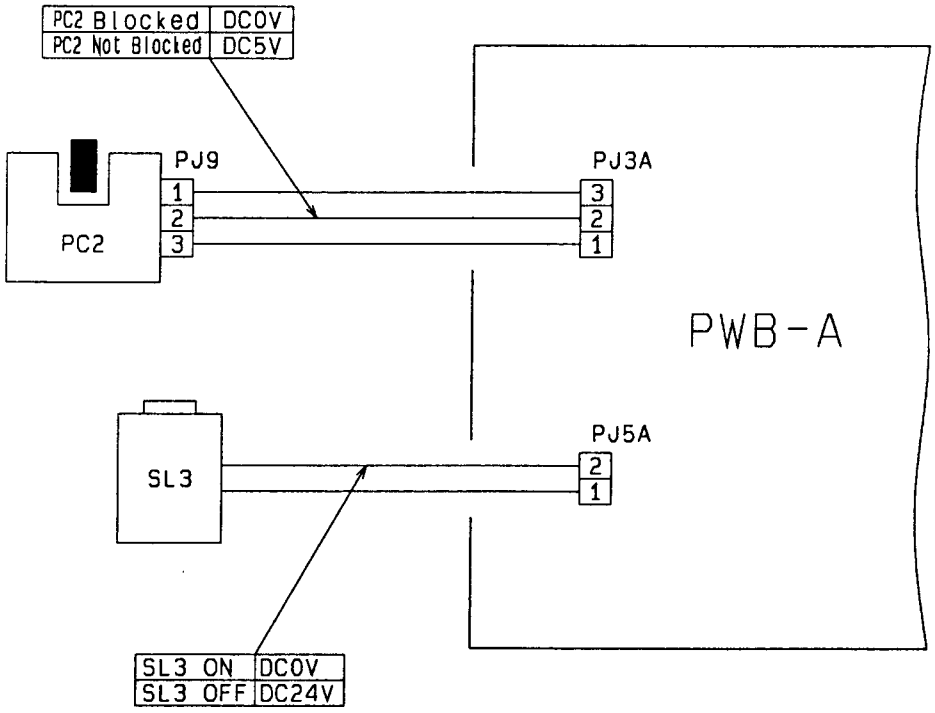

1159C03TAA

◆Multi Bypass Misfeed Clearing Procedure

Symptom	Step	Check Item	Result	Action
• Paper is not taken up at all.	1	Does the paper being used meet product specifications?	NO	Instruct the user to use the paper that meets product specifications.
	2	Is the paper curled, waved, or damp?	YES	Change the paper. Instruct the user in how to store the paper.
	3	Is the Multi Bypass Paper Take-Up Roll deformed, worn, or dirty with paper dust?	YES	Clean or change the Multi Bypass Paper Take-Up Roll.
	4	Does the voltage across PJ3A-2 on PWB-A and GND change from DC5V to DC0V when Paper Take-Up Sensor PC2 is blocked?	NO	Check the PC2 actuator for operation and, if it checks okay, change PC2.
	5	Check Multi Bypass Paper Take-Up Solenoid SL3. Does the voltage across PJ5A-2 on PWB-A and GND change from DC24V to DC0V when the Start key is pressed?	YES	Change SL3.
			NO	Change PWB-A.

1159SBT020204A

4) Exit Misfeed

Relevant Electrical Parts	
• Paper Exit Sensor (PC3)	• Master Board (PWB-A)

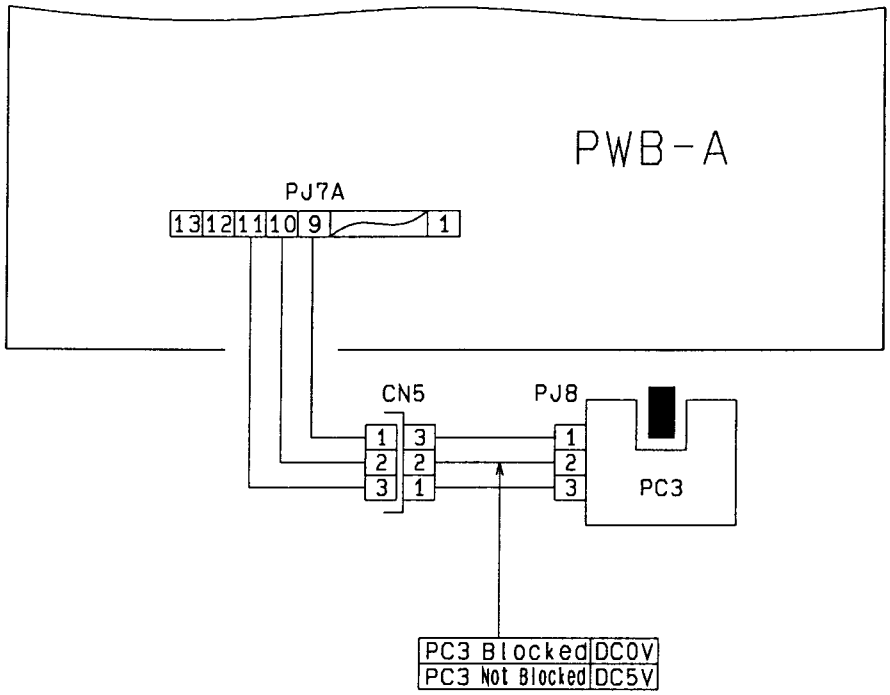

1159C04TAA

◆Exit Misfeed Clearing Procedure

Symptom	Step	Check Item	Result	Action
Paper is stationary at the Fusing Roller.	1	Are the Fusing Rollers dirty or scratched?	YES	Clean or change the Fusing Rollers.
	2	Are the Fusing Roller Paper Separator Fingers deformed, worn, or dirty?	YES	Clean or change the defective paper separator fingers.
	3	Is the Cleaning Roller dirty or scratched?	YES	Clean or change the Cleaning Roller.
Paper is stationary at the Exit Roller.	1	Does the voltage across PJ7A-10 on PWB-A and GND change from DC5V to DC0V when Paper Exit Sensor PC3 is blocked?	YES	Change PWB-A.
			NO	Check the PC3 actuator for operation and, if it checks okay, change PC3.

5) SDH Misfeed (EP1030F/EP1031F)

Relevant Electrical Parts	
• SDH Paper Transport Sensor (PC23) • SDH Original Set Sensor (PC22) • SDH Original Exit Sensor (PC24)	• SDH Paper Take-Up Solenoid (SL10) • SDH Drive Motor (M10) • SDH Registration Clutch (CL10) • SDH PWB (PWB-C) • Master Board (PWB-A)

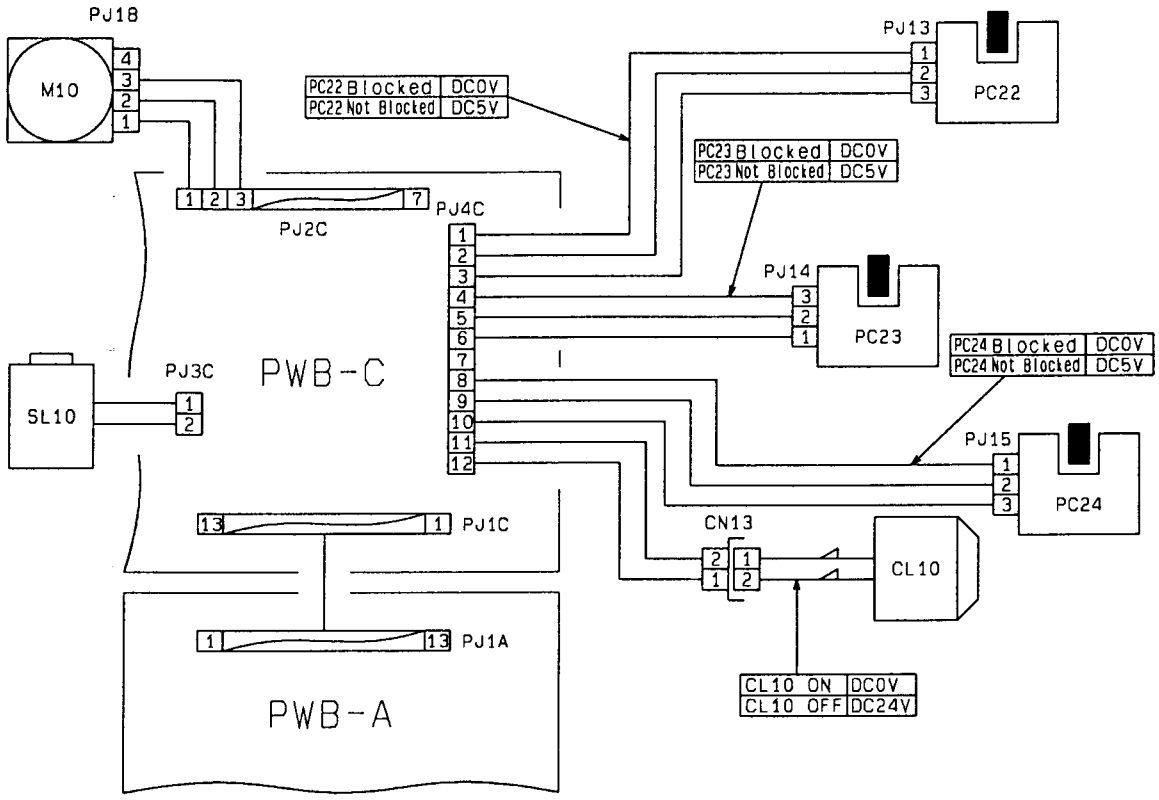

1159C05TAB

◆SDH Misfeed Clearing Procedure

Symptom	Step	Check Item	Result	Action
Document is not taken up at all.	1	Does the document being used meet specifications for reliable feeding?	NO	Instruct the user to use a document that meets specifications for reliable feeding.
	2	Do the documents loaded exceed the capacity of the SDH?	YES	Ask the user to keep within the SDH document capacity.
	3	Are the Document Take-Up and Separator Rolls deformed, worn, or dirty with paper dust?	YES	Clean or change the Document Take-Up and Separator Rolls.
	4	Does the voltage across PJ4C-2 on PWB-C and GND change from DC5V to DC0V when SDH Original Set Sensor PC22 is blocked?	NO	Check the PC22 actuator for operation and, if it checks okay, change PC22.
	5	Check SDH Drive Motor M10. Is the voltage across PJ1A-8 on PWB-A and GND DC24V when the Start key is pressed?	NO	Change PWB-A or PWB-C.
			YES	Change M10.
	6	Check SDH Paper Take-Up Solenoid SL10. Does the voltage across PJ1A-6 on PWB-A and GND change from DC24V to DC0V when the Start key is pressed?	YES	Change SL10.
			NO	Change PWB-A or PWB-C.
Document is stationary at the Registration Roller.	1	Is the Registration Roller deformed, worn, or dirty with paper dust?	YES	Clean or change the Registration Roller.
	2	Does the voltage across PJ4C-5 on PWB-C and GND change from DC5V to DC0V when SDH Paper Transport Sensor PC23 is blocked?	NO	Check the PC23 actuator for operation and, if it checks okay, change PC23.
	3	Check SDH Registration Clutch CL10. Does the voltage across PJ1A-7 on PWB-A and GND change from DC24V to DC0V after the Start key has been pressed?	YES	Change CL10.
			NO	Change PWB-A or PWB-C.
Document is stationary at the Exit Roller.	1	Is the Exit Roller deformed, worn, or dirty with paper dust?	YES	Clean or change the Exit Roller.
	2	Does the voltage across PJ4C-9 on PWB-C and GND change from DC5V to DC0V when SDH Original Exit Sensor PC24 is blocked?	NO	Check the PC24 actuator for operation and, if it checks okay, change PC24.
			YES	Change PWB-C.

3 MALFUNCTIONS

1159SBT0301A

3-1. Detection Timings Classified by Malfunction Codes

Code	Description	Detection Timing
C00	Main Drive Motor M1's failure to turn	• The lock signal remains HIGH for a continuous 1-sec. or more period while M1 remains energized. • The lock signal remains LOW for a continuous 1-sec. or more period while M1 remains deenergized.
C04	Ozone Fan Motor M3's failure to turn	The lock signal remains HIGH for a continuous 1-sec. or more period while M3 remains energized.
C40	Exposure Lamp LA1 malfunction	• The AE Sensor output at 91 msec. after the start of a scan motion with LA1 ON is lower than the AE Sensor output when LA1 is OFF. • The AE Sensor output at any timing when the Scanner is at home position with LA1 OFF is higher than the AE Sensor output when LA1 is ON.
C50	Warming-up failure	The surface temperature of the Upper Fusing Roller does not reach a given level after a given period of time during warming-up as detailed below: • From room temperature to 45°C: 10 sec. • From 45 to 80°C: 10 sec. • From 80 to 115°C: 10 sec. • From 115 to 145°C: 15 sec. • From 145 to 160°C: 15 sec.
C51	Abnormally low fusing temperature	The surface temperature of the Upper Fusing Roller is below 150°C after the copier has completed warming up.
C52	Abnormally high fusing temperature	The surface temperature of the Upper Fusing Roller is 230°C or higher after the copier has completed warming up.
C60	Scanner drive malfunction	<When the Power Switch is turned ON> • When the Scanner is at the home position, Scanner Home Position Sensor PC11 does not go from LOW to HIGH even after the lapse of 1 sec. after the Scanner has started a scan motion. • When the Scanner is at a position other than home, PC11 does not go from HIGH to LOW even after the lapse of 8.4 sec. after the Scanner has started a scan motion. <When the Start key is pressed> • PC11 does not go from LOW to HIGH even after the lapse of 1 sec. after the Scanner has started a scan motion. • PC11 does not go from HIGH to LOW even after the lapse of 8.4 sec. after the Scanner has started a return motion.

Code	Description	Detection Timing
C61	Lens drive malfunction	• Lens Home Position Sensor PC12 does not go from LOW to HIGH even when Lens Drive Motor M5 is energized for 750 pulses for the lens movement in the reduction direction. • PC12 does not go from HIGH to LOW even when M5 is energized for 1400 pulses for the lens movement in the enlargement direction.
CF1	AE Sensor malfunction	The output from AE Sensor Board PWB-E is 4.8V or more, or less than 0.4V when the Exposure Lamp is OFF and Scanner at home position.
CF3	ATDC Sensor malfunction	The output from ATDC Sensor UN3 is 4.8V or more, or less than 0.4V.
E0	EEPROM malfunction	Data which must be retained even when power is turned OFF cannot be written to, and read from, the EEPROM.
E1	IU toner detection failure	The output from ATDC Sensor UN3 remains less than 1.0V during an F8 operation.
E2	Blown IU fuse detection failure	The IU fuse is not blown during an F8 operation.

3-2. Troubleshooting Procedures

1159SBT030201A

1) C00: Main Drive Motor's Failure to Turn

Relevant Electrical Parts	
• Main Drive Motor (M1)	• Power Supply Unit (PU1) • Master Board (PWB-A)

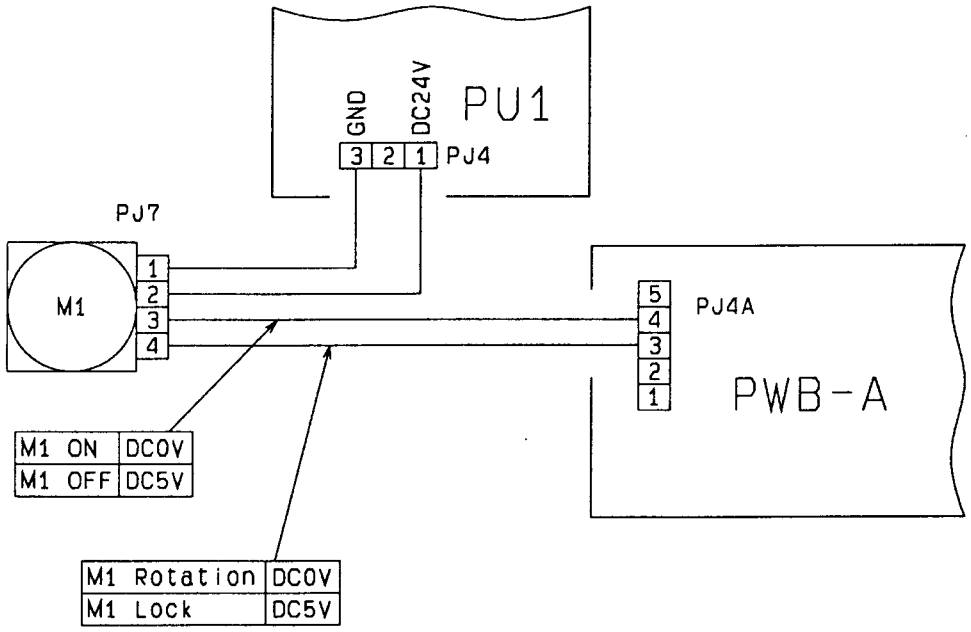

1159C06TAA

Step	Check Item	Result	Action
1	Does the voltage across PJ4A-4 on PWB-A and GND change from DC5V to DC0V when the Start key is pressed?	NO	Change PWB-A.
2	Is the voltage across PJ4A-3 on PWB-A and GND DC0V when Power Switch S1 is turned ON?	YES	Change M1.
3	Is the voltage across PJ4-1 on PU1 and GND DC24V when S1 is turned ON?	NO	Change PU1.

1159SBT030202A

2) C04: Ozone Fan Motor's Failure to Turn

Relevant Electrical Parts	
• Ozone Fan Motor (M1)	• Master Board (PWB-A)

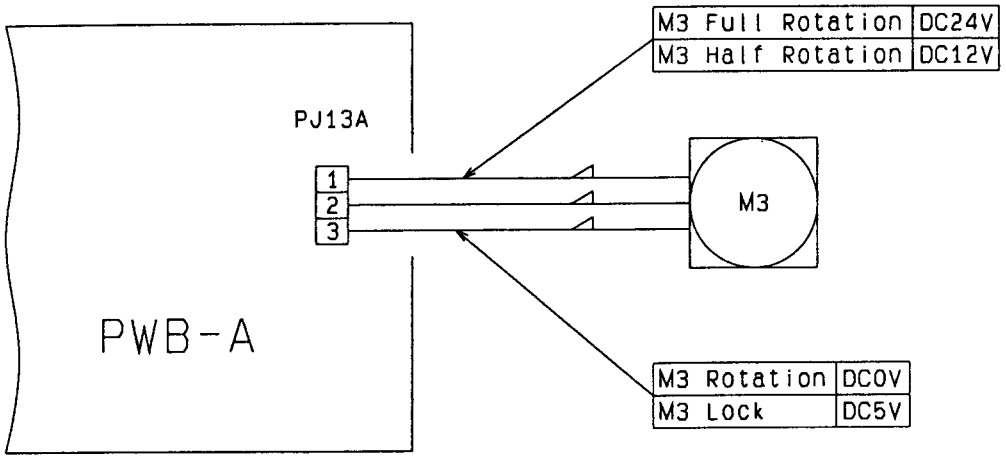

1159C07TAA

Step	Check Item	Result	Action
1	Does the voltage across PJ13A-1 on PWB-A and GND change from DC12V to DC24V when the Start key is pressed?	NO	Change PWB-A.
2	Is the voltage across PJ13A-3 on PWB-A and GND DC5V when S1 is turned ON?	YES	Change M3.

3) C40: Exposure Lamp Malfunction

Relevant Electrical Parts	
• Exposure Lamp (LA1) • Thermal Fuse (TF1)	• AVR (PWB-F) • Master Board (PWB-A)

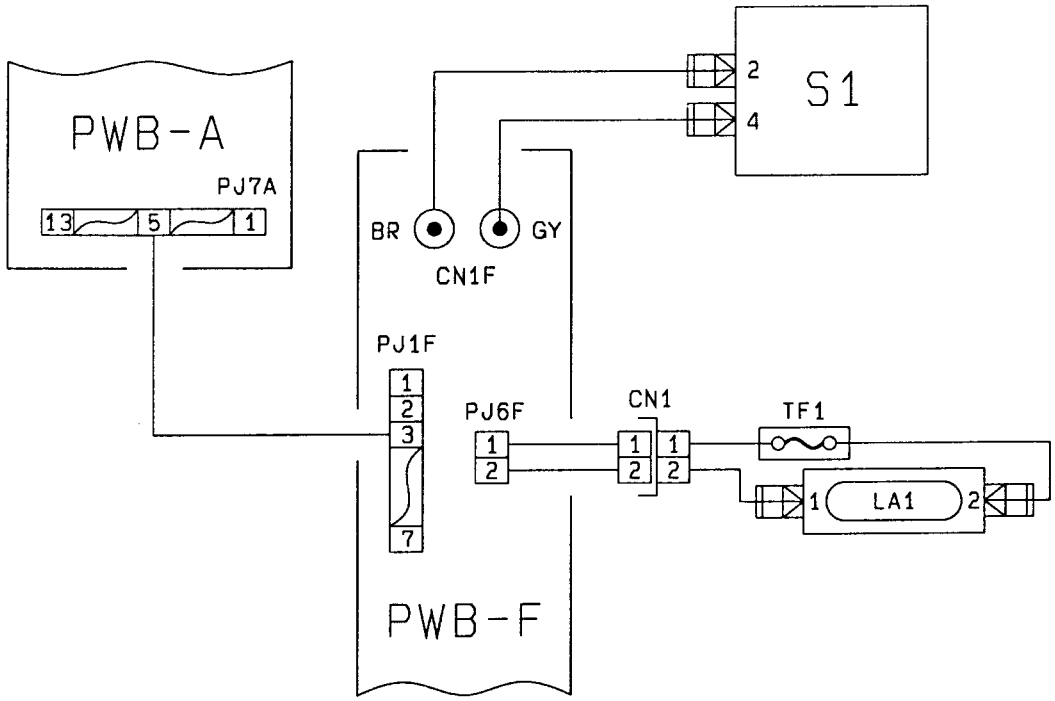

1159C08TAA

Step	Check Item	Result	Action
1	Is the source voltage being supplied across CN1F-GY and -BR on PWB-F?	NO	Check the power line.
2	Is the circuit across PJ6F-1 and -2 on the LA1 side conducting when PJ6F is removed from PWB-F?	YES	Change PWB-F or PWB-A.
		NO	Change LA1 or TF1.

1159SBT030204A

4) C50: Warming-up Failure
C51: Abnormally Low Fusing Temperature
C52: Abnormally High Fusing Temperature

Relevant Electrical Parts	
• Fusing Thermistor (TH1) • Fusing Thermoswitch (TS1)	• AVR (PWB-F) • Master Board (PWB-A)

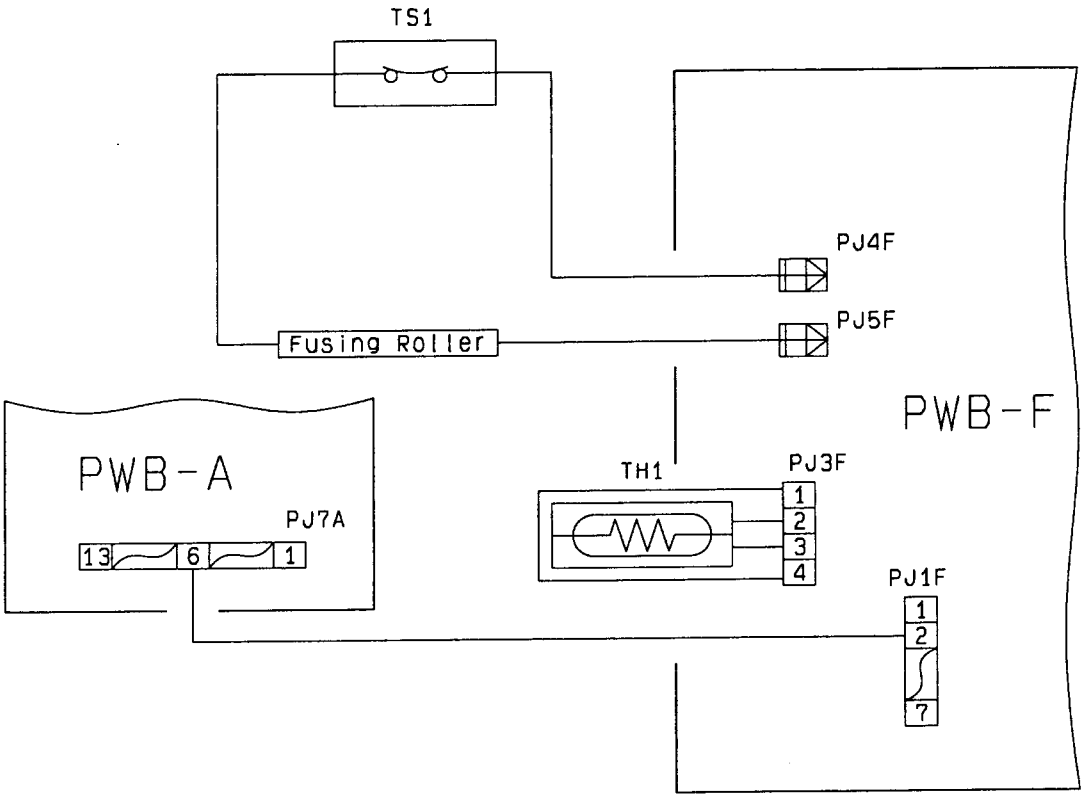

1159C09TAA

◆C50, C51

Step	Check Item	Result	Action
1	Is the source voltage being supplied across PJ4F and PJ5F on PWB-F when S1 is turned ON?	NO	Change PWB-F.
2	Is there continuity across PJ4F and PJ5F on PWB-F as it is checked?	NO	Change the Fusing Unit.
3	Is TH1 installed properly, or dirty?	YES	Reinstall or clean TH1.
4	Measure the resistance of TH1. Is it infinite?	YES	Change TH1.
		NO	Change PWB-F or PWB-A.

◆C52

Step	Check Item	Result	Action
1	Is TH1 installed properly, or dirty?	YES	Reinstall or clean TH1.
2	Measure the resistance of TH1. Is it 0Ω or close to 0?	YES	Change TH1.
		NO	Change PWB-F or PWB-A.

1159SBT030205A

5) C60: Scanner Drive Malfunction
C61: Lens Drive Malfunction (EP1031/EP1031F)

Relevant Electrical Parts	
• Scanner Home Position Sensor (PC11) • Lens Home Position Sensor (PC12)	• Scanner Drive Motor (M4) • Lens Drive Motor (M5) • Master Board (PWB-A)

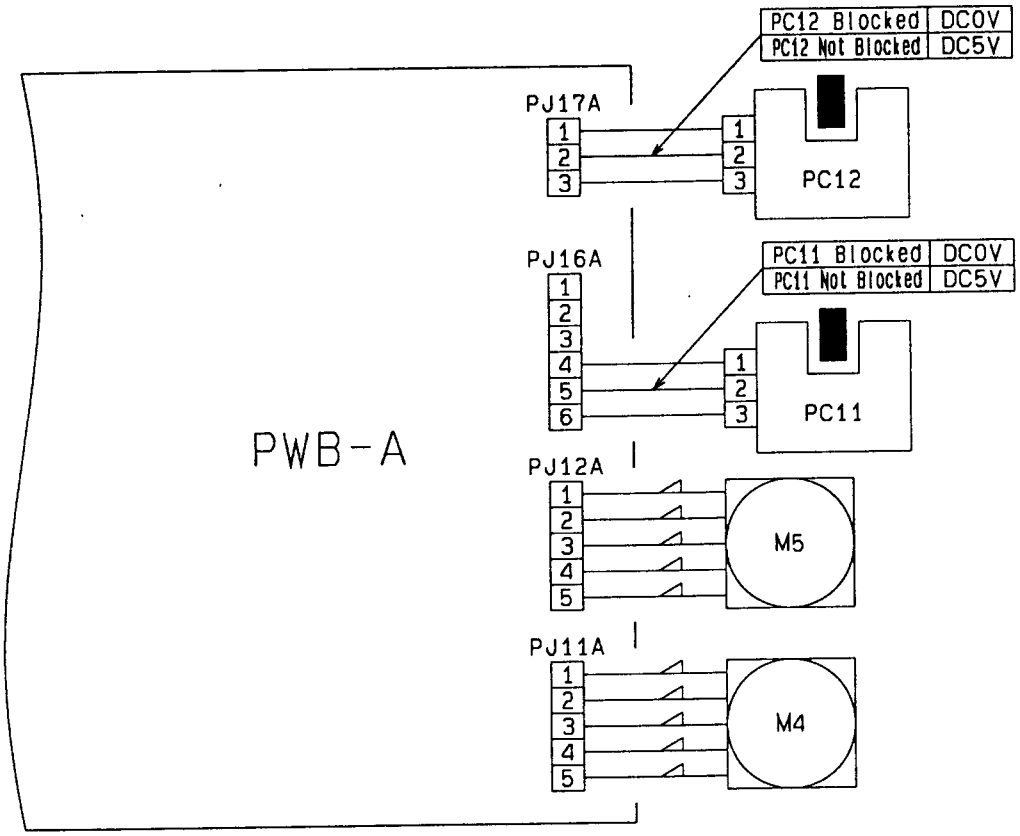

1159C10TAA

◆C60

Step	Check Item	Result	Action
1	Does the voltage across PJ16A-5 on PWB-A and GND change from DC5V to DC0V when Scanner Home Position Sensor PC11 is blocked?	YES	Change PWB-A.
		NO	Change PC11.
2	Is PJ11A on PWB-A connected properly?	YES	Change PWB-A or M4.
		NO	Connect it properly.

◆C61

Step	Check Item	Result	Action
1	Does the voltage across PJ17A-2 on PWB-A and GND change from DC5V to DC0V when Lens Home Position Sensor PC12 is blocked?	YES	Change PWB-A.
		NO	Change PC12.
2	Is PJ12A on PWB-A connected properly?	YES	Change PWB-A or M5.
		NO	Connect it properly.

1159SBT030206A

6) CF1: AE Sensor Malfunction

Relevant Electrical Parts	
• AE Sensor Board (PWB-E)	• Master Board (PWB-A)

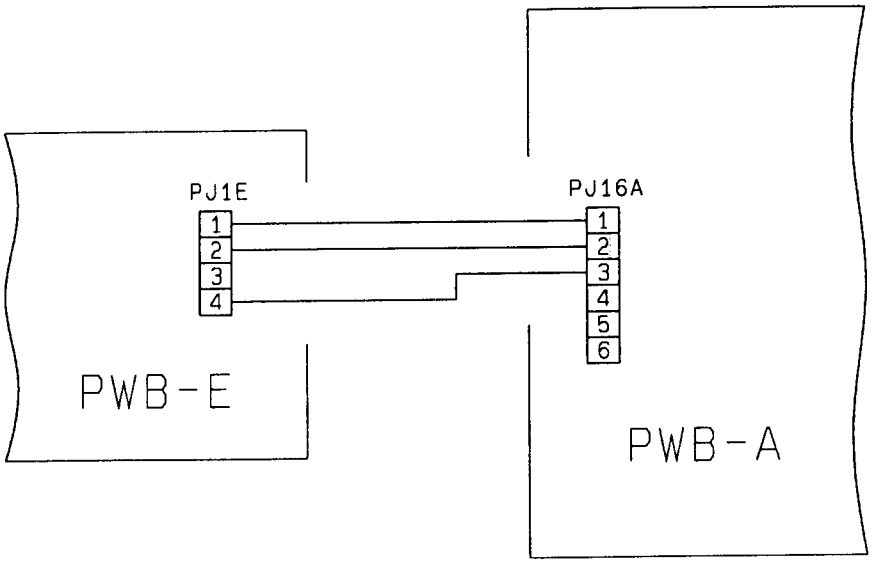

1159C11TAA

Step	Check Item	Result	Action
1	Is the voltage across PJ16A-2 on PWB-A and GND DC4.8V or more, or 0.4V or less when the Exposure Lamp is OFF and Scanner at home position	YES	Change PWB-E.
		NO	Change PWB-A.

1159SBT030207A

7) CF3: ATDC Sensor Malfunction

Relevant Electrical Parts	
• ATDC Sensor (UN3)	• Master Board (PWB-A)

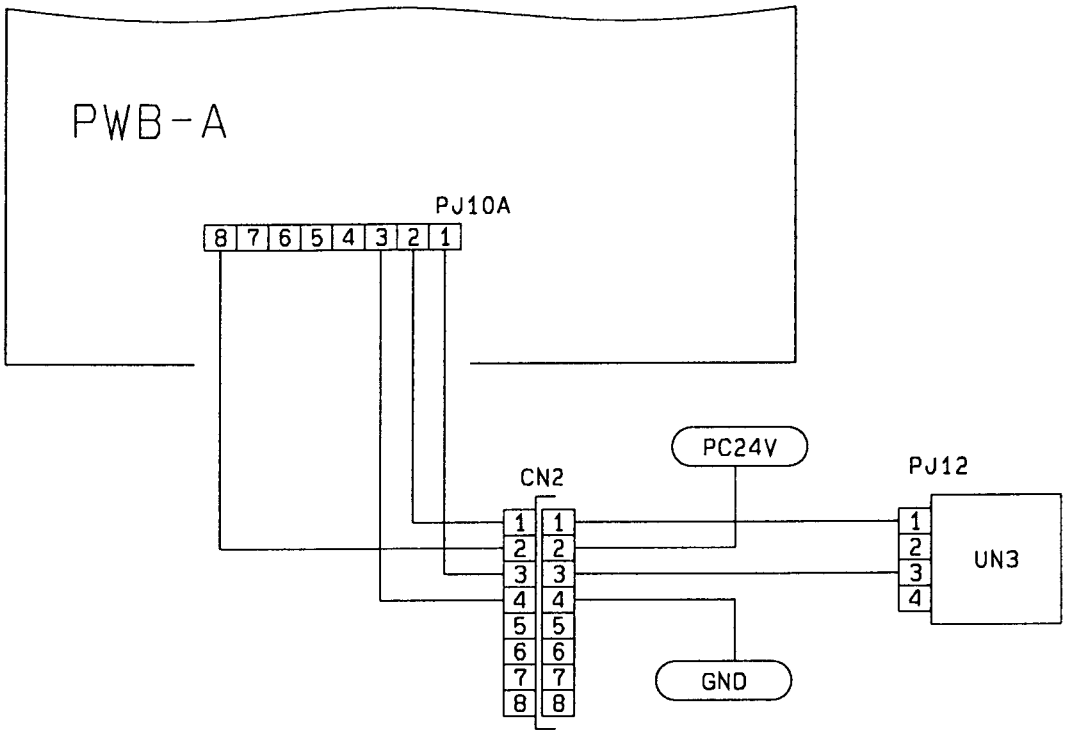

Step	Check Item	Result	Action
1	Is the voltage across PJ10A-1 on PWB-A and GND DC4.8V or more, or 0.4V or less?	YES	Change UN3.
		NO	Change PWB-A.

1159SBT030208A

8) E0: EEPROM Malfunction

Relevant Electrical Parts
• Master Board (PWB-A)

Step	Check Item	Result	Action
1	Does "E0" appear again after the malfunction has been reset?	YES	Change EEPROM.
2	Does "E0" appear during a copy cycle?	YES	Change EEPROM.
3	Does "E0" appear when the Power Switch is turned ON?	YES	Change PWB-A.

9) E1: IU Toner Detection Failure

E2: Blown IU Fuse Detection Failure

Relevant Electrical Parts	
• ATDC Sensor (UN3)	• Imaging Unit (IU) • Master Board (PWB-A)

E1

Step	Check Item	Result	Action
1	Did you peel off the seal from the Toner Cartridge?	NO	Peel off the seal.
2	Has the starter been loaded?	YES	Change UN3 or PWB-A.

E2

Step	Check Item	Result	Action
1	Is the fuse blown?	YES	Change the fuse or PWB-A.

3-3. Power Malfunctions

Power is not Turned ON (Control Panel Shows Nothing)

Relevant Electrical Parts	
• Power Switch (S1) • Noise Filter Board (PWB-D)	• AVR (PWB-F) • Power Supply Unit (PU1) • MSC Board (PWB-B) • Master Board (PWB-A)

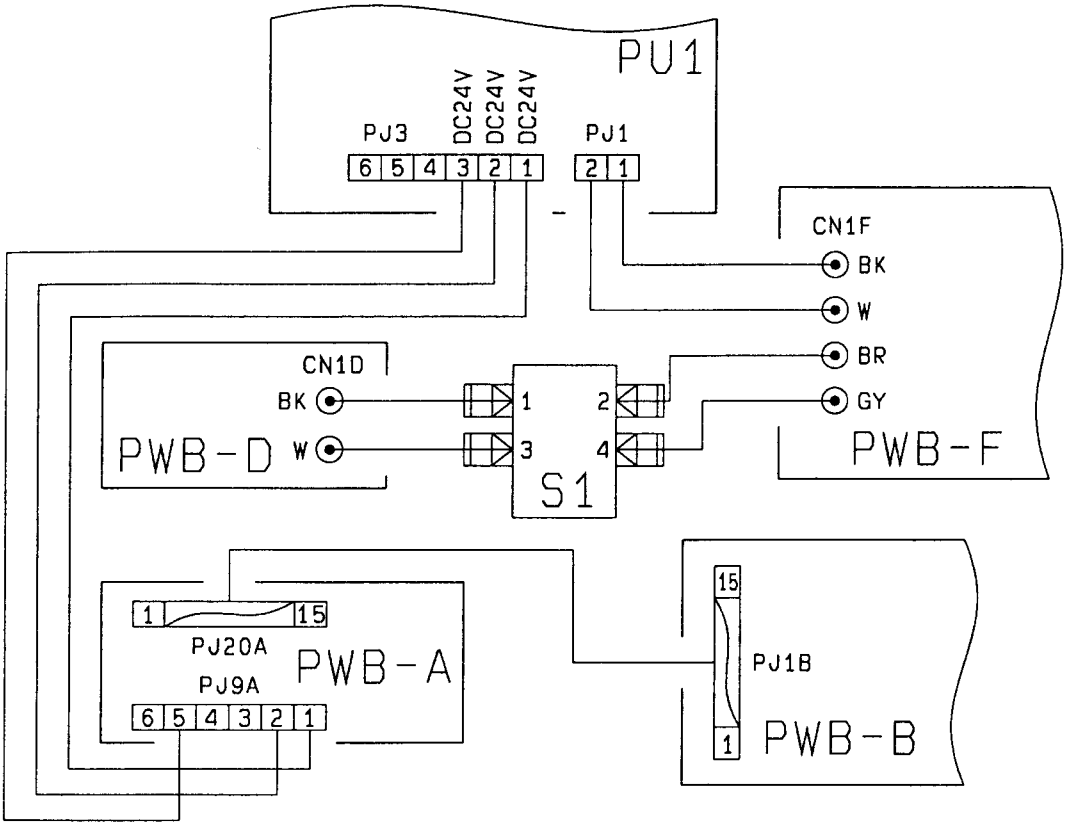

1159C13TAA

Step	Check Item	Result	Action
1	Is the source voltage applied across 1 and 3 of S1?	NO	Change PWB-D.
2	Is the source voltage being applied across 2 and 4 of S1 when it is turned ON?	NO	Change S1.
3	Is the source voltage being applied across 1 and 2 of PJ3 on PU1 when S1 is turned ON?	NO	Change PWB-F.
4	Is the voltage across PJ9A-1 to -3 on PWB-A and GND DC24V when S1 is turned ON?	NO	Change PU1.
5	Is the voltage across PJ9A-1, -2, and -5 on PWB-A and GND DC24V when S1 is turned ON?	NO	Check the wiring between PU1 and PWB-A and, if it is intact, change PU1.
6	Are PJ20A on PWB-A and PJ1B on PWB-B installed properly?	YES	Change PWB-A, PWB-B, and the harness, in that order.
		NO	Install them properly.

1149SAT0500A

5 IMAGE FAILURE

1159SBT0501A

5-1. Image Failure Troubleshooting

Image failures have many possible causes. For troubleshooting, it is necessary to determine whether a failure is attributable to a basic cause or any other cause.

In this chapter, troubleshooting is divided into "initial checks" and "troubleshooting procedures classified by image failure". If an image failure has occurred, first make the initial checks, then proceed to the corresponding image failure troubleshooting procedure.

1159SBT0502A

5-2. Initial Checks

1) Place of installation

- Is the source voltage normal? Does the voltage vary greatly?
- Is the copier installed in a hot, humid place or in a place where temperatures vary sharply?
- Is the copier installed in a dusty place?
- Is the copier subjected to direct sunlight?
- Is the copier level?

2) Copy paper

- Is the recommended paper used?
  ➡Load recommended paper and make copies to see if the problem persists.
- Is the paper damp?
  ➡Load new paper and make copies to see if the problem persists.

3) Original

- Does the original used have a reddish background or is it written in light pencil?
  ➡Use the Test Chart to check the image.
- Is the original transparent or are transparencies being used?
  ➡Cover with white paper and make a copy.
- Are the Original Glass and ADF Transport Belt dirty or scratched?
  ➡If dirty, clean with alcohol. If scratched, replace.

4) PM parts (supplies)

- Have the PM parts (supplies), such as the PC Drum, Cleaning Blade, AIDC Sensor and corona wires, reached the end of their cleaning/replacement cycles?

5) Adjustment items (registration, focus, AE level, etc.)

- Among the adjustment items given in DIS/REASSEMBLY, ADJUSTMENT, is there any adjustment that may remedy the image failure?

5-3. Troubleshooting Procedures Classified by Image Failure

<Image Failure Samples>

1) Blank copy

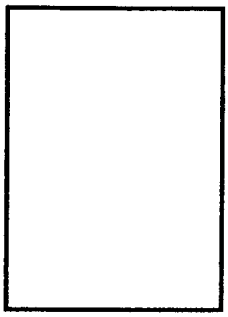

2) Black copy

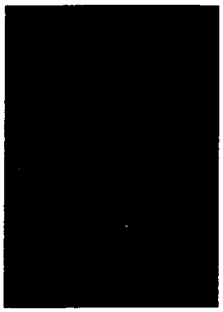

3) Low image density

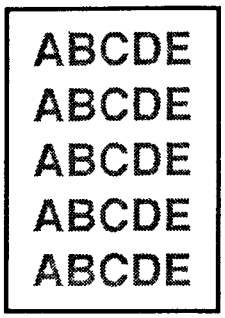

4) Foggy background

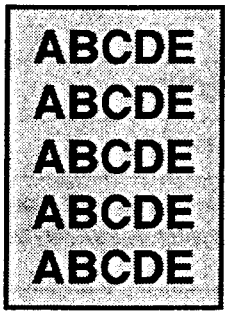

5) Black streaks or bands

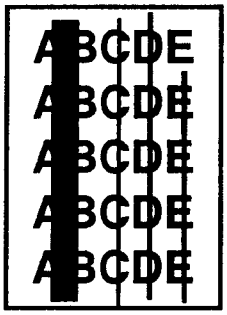

6) Black spots

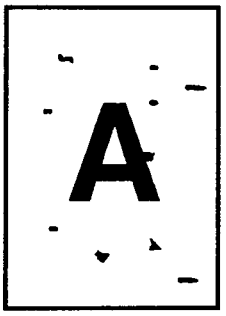

7) Blank streaks or bands

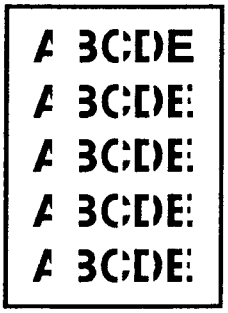

8) Void areas

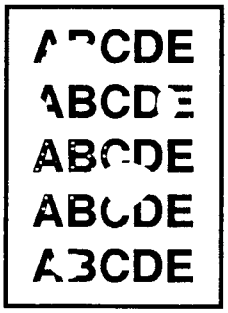

9) Smear on back

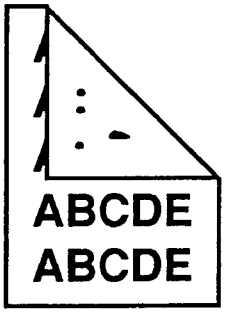

1149T012AA

1159SBT050301A
1) Blank Copy

Cause	Step	Check Item	Result	Action
Charging failure	1	Is the PC Drum Charge Corona installed correctly?	NO	Install correctly.
	2	Are the Comb Electrode wire and grid mesh normal?	NO	Check and change if necessary.
	3	Is the wiring between High Voltage Unit HV1 and the PC Drum Charge Corona normal?	YES	Change HV1.
			NO	Correct the wiring.
Developing Unit out of position	4	Is the Imaging Unit in position?	NO	Reinstall the Unit.
	5	Are the Ds Rolls in contact with the PC Drum?	NO	Reinstall the Developing Unit.
	6	Is the drive transmission mechanism to the Developing Unit intact?	NO	Check and change any defective part.
Image transfer failure	7	Is the Image Transfer Corona wire normal?	NO	Check and change if necessary.
	8	Is the wiring between High Voltage Unit HV1 and corona wire normal?	YES	Change HV1.
			NO	Correct wiring.
Paper guide shorting	9	Is the paper guide shorted to the frame?	YES	Connect the paper guide through the resistor to the frame.

1159SBT050302A
2) Black copy

Cause	Step	Check Item	Result	Action
PC Drum grounding failure	1	Is the PC Drum properly grounded?	NO	Clean or change the PC Drum.
Developing bias failure	2	Is the developing bias contact normal?	NO	Clean or replace the developing bias contact.
Light path failure	3	Has condensation formed on the mirrors, lens, or PC Drum?	YES	Clean the mirrors and lens, and run the Drum Dehum. operation.
	4	Are the mirrors installed properly?	NO	Reinstall the mirrors.
Exposure Lamp's failure to turn ON	5	Does the Exposure Lamp light up?	NO	Take the action for malfunction code C40.

1159SBT050303A

3) Low Image Density

Cause	Step	Check Item	Result	Action
PC Drum life	1	Does the PC Drum have enough service life?	NO	Change the PC Drum.
	2	Do the fan motors turn properly? (Ozone deterioration, temperature rise)	NO	Troubleshoot the fan motors.
PC Drum grounding failure	3	Is the PC Drum grounded properly?	NO	Clean or change the PC Drum.
Drum charge failure	4	Are the Comb Electrode and grid mesh normal?	NO	Check and change if necessary.
	5	Is the wiring between High Voltage Unit HV1 and the PC Drum Charge Corona normal?	YES	Change HV1.
			NO	Correct the wiring.
Optical failure	6	Are the mirrors and lens dirty or covered with condensation?	YES	Clean the mirrors and lens.
Image transfer failure	7	Is the Image Transfer Corona dirty?	YES	Clean the Image Transfer Corona or change the wire.
	8	Is the copy paper damp?	YES	Change the copy paper and instruct the user in how to store paper.
Developing failure	9	Is Db adjusted properly?	NO	Make Db adjustment.
	10	Are the Ds Rolls in contact with the PC Drum?	NO	Reinstall the Developing Unit.

1159SBT050304A

4) Foggy background

Cause	Step	Check Item	Result	Action
Cleaning failure	1	Is the Cleaning Blade dirty with foreign matter, paper dust, etc. or is it scratched?	YES	Change the Cleaning Blade.
Optical failure	2	Are the mirrors and lens dirty?	YES	Clean the mirrors and lens.
PC Drum failure	3	Is the PC Drum dirty with foreign matter, etc.?	YES	Clean or replace the PC Drum. Change the Cleaning Blade if necessary.
	4	Is the PC Drum properly grounded?	NO	Clean or change the PC Drum.
Developing failure	5	Is the Sleeve Roller abnormally dirty?	YES	Clean the Sleeve Roller. Check the Developer Scattering Prevention Seal to see if it is deformed or dirty.
	6	Is the developing bias contact normal?	NO	Clean or change the developing bias contact.

1159SBT050305A

5) Black Streaks or Bands

Cause	Step	Check Item	Result	Action
Uneven charging	1	Are the Comb Electrode and grid mesh dirty?	YES	Clean or replace the PC Drum Charge Corona. Check the toner suction mechanism for operation.
Cleaning failure	2	Is the Cleaning Blade dirty with foreign matter, paper dust, etc., or is it scratched?	YES	Change the Cleaning Blade.
PC Drum failure	3	Is the PC Drum surface dirty or scratched?	YES	Change the PC Drum. If necessary, change the Cleaning Blade.
Fusing failure	4	Is the Upper Fusing Roller dirty or scratched?	YES	Clean or replace the Upper Fusing Roller.
	5	Are the Upper Paper Separator Fingers dirty or deformed?	YES	Clean or replace the Upper Paper Separator Fingers.
Optical failure	6	Are the mirrors and lens dirty with foreign matter?	YES	Clean the mirrors and lens.

1159SBT050306A

6) Black Spots

Cause	Step	Check Item	Result	Action
PC Drum failure	1	Is the PC Drum surface scratched or dirty with foreign matter?	YES	Clean or change the PC Drum. Change the Cleaning Blade if necessary.
Fusing failure	2	Is the Upper Fusing Roller dirty or scratched?	YES	Check the Fusing Thermistors. Clean or change the Upper Fusing Roller.
Developing failure	3	Is the amount of toner on the Sleeve Roller proper?	YES	Go to step 5.
	4	Is the toner-to-carrier ratio relatively high?	YES	Change the toner-to-carrier ratio.
	5	Is the Developer Scattering Prevention Seal deformed or dirty?	YES	Clean or change the Developer Scattering Prevention Seal.

1159SBT050307A

7) Blank Streaks or Bands

Cause	Step	Check Item	Result	Action
Plugged Db	1	Is Db plugged with foreign matter, caked toner, etc.?	YES	Remove foreign matter. If the problem persists, change the developer.
Drum charge failure	2	Are the Comb Electrode and grid mesh dirty?	YES	Clean or change the PC Drum Charge Corona.
Image transfer failure	3	Is the Image Transfer Corona wire dirty?	YES	Clean or change the Image Transfer Corona.
Image Erase Lamp lit at abnormal timing	4	Does the Image Erase Lamp light up at abnormal timing?	YES	Check the Image Erase Lamp.
Fusing failure	5	Is the Upper Fusing Roller dirty or scratched?	YES	Clean or change the Upper Fusing Roller.
	6	Are the Upper Paper Separator Fingers dirty or scratched?	YES	Clean or change the Upper Paper Separator Fingers.

1159SBT050308A

8) Void Areas

Cause	Step	Check Item	Result	Action
Image transfer failure	1	Is the Image Transfer Corona installed properly?	NO	Reinstall.
	2	Is the Image Transfer Corona wire dirty?	YES	Clean or change the Image Transfer Corona wire.
Damp copy paper	3	Is the image improved by loading new paper?	YES	Change the copy paper and instruct the user in how to store paper.
Small amount of toner supplied	4	Is toner uniformly attracted onto the Sleeve Roller?	NO	Check the Db value and amount of developer, and check the Bucket Roller for operation.
Paper guide shorting	5	Is the paper guide shorted to the frame?	YES	Connect the paper guide through the resistor to the frame.
Fusing failure	6	Is the Lower Fusing Roller scratched or deformed?	YES	Replace the Lower Fusing Roller.

1159SBT050309A

9) Smear on Back

Cause	Step	Check Item	Result	Action
Dirty Developing Unit	1	Is the bottom part of the Developing Unit dirty?	YES	Clean and check the Developer Scattering Prevention Seal.
Dirty Image Transfer Corona	2	Is the Image Transfer Corona dirty?	YES	Clean the corona and check the Developing Unit.
	3	Is the Pre-Image Transfer Guide Plate dirty?	YES	Clean the guide plate and check the Developing Unit.
Dirty Fusing Unit	4	Is the Fusing Unit Entrance Guide Plate dirty?	YES	Clean the guide plate and check the Developing Unit.
	5	Are the Upper and Lower Fusing Rollers dirty?	YES	Clean or change the Upper and Lower Fusing Rollers.

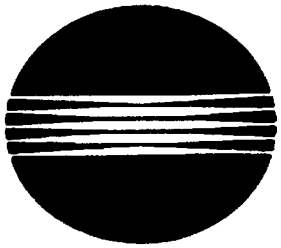

MINOLTA

Copyright
1997 MINOLTA Co., Ltd.
Printed in Japan

Use of this manual should be strictly supervised to avoid disclosure of confidential information.

MINOLTA CO., LTD.

1159-7998-11 97074370
Printed in Japan