EP1054

PARTS MANUAL

MINOLTA

PREFACE

1. The part numbers listed in Parts Manual are those which were assigned to the parts making up the machine at the time machine was originally introduced onto the market.

2. Parts whose numbers are preceded by an asterisk in the Index Column on the List Page are parts to be used in only certain market areas. Therefore, please check the number in the Area cloumn on the List Page and then compare it with the numbers given in the Area Chart on page II to find out which part number is applicable to your own ares.
   NOTE: Parts for only certain Market Areas: The part numbers for these parts vary according to market area. In other cases, these parts are used in only restricted areas.

3. The Index Number on the List Page is composed of two numbers and two letters. Generally, only A is used as the first letter of the two letters. However, sometimes B, C, D, etc. are used when one part in the illustration, such as an electrical parts or a part which varies according to market areas, has two or more part numbers. The second of the two letters represents the modification history of that part.

4. The Areas Number is listed in the Areas Column for only those parts used in certain market areas. This Area Number represents the areas listed opposite to It in the Chart given on Page II. Parts having no Area Number listed in the Area Column can be used in all market areas.

5. In the exploded views in this Parts Manual the parts (Screws & Washes, etc...) which are indicated with a "four-digit" numbers are listed in numerical order in the section "SCREWS AND WASHERS". Please check these "four-digit" numbers with the part numbers ("ten-digit" numbers) which should be used for ordering the part.

6. All part numbers consist of "ten-digit" which should all be quoted when ordering a part. The price of parts can be obtained by referring to the "Parts Price List" which is separately issued.

7. All infomation contained in this parts manual is subject to change.

AREA CHART

AREA No.	AREA	(JAPAN)	AREA No.	AREA	(JAPAN)
0400	METRIC		2619	220/240V(EXCEPT EUROPE)	
0412	EXCEPT HONG KONG/OCEANIA/SAUDI ARABIA		2638	220/240V(EXCEPT HONG KONG/OCEANIA/EUROPE)	
0703	EXCEPT EUROPE		2706	EUROPE	
0732	EXCEPT USA/LATIN AMERICA		2710	EUROPE(MINOLTA)	
0751	EXCEPT EUROPE/LATIN AMERICA		2712	TAIWAN	
0800	MINOLTA		2763	LATIN AMERICA	
2300	INCH		2771	EUROPE(MH)	
2313	INCH(DEVELOP)		2793	HONG KONG/OCEANIA	
2314	INCH(HONG KONG/OCEANIA/SAUDI ARABIA)		2797	EUROPE/LATIN AMERICA	
2401	METRIC(EXCEPT JAPAN/TAIWAN)		2812	EXCEPT MINOLTA	
2423	METRIC(EXCEPT JAPAN/TAIWAN/EUROPE)		2835	MINOLTA(EXCEPT JAPAN/EUROPE)	
2500	115V				
2504	115/120V				
2505	115/120/127V				
2517	115/120/200/220/240V				
2520	120V				
2521	120/127V				
2542	115/127/220/240V(EXCEPT EUROPE)				
2612	220/240V				

We recommend that you cross out from your Parts Manuals those parts numbers which do not apply your area so that no error is made when ordering parts.

CONTENTS

1. HOUSING • • •

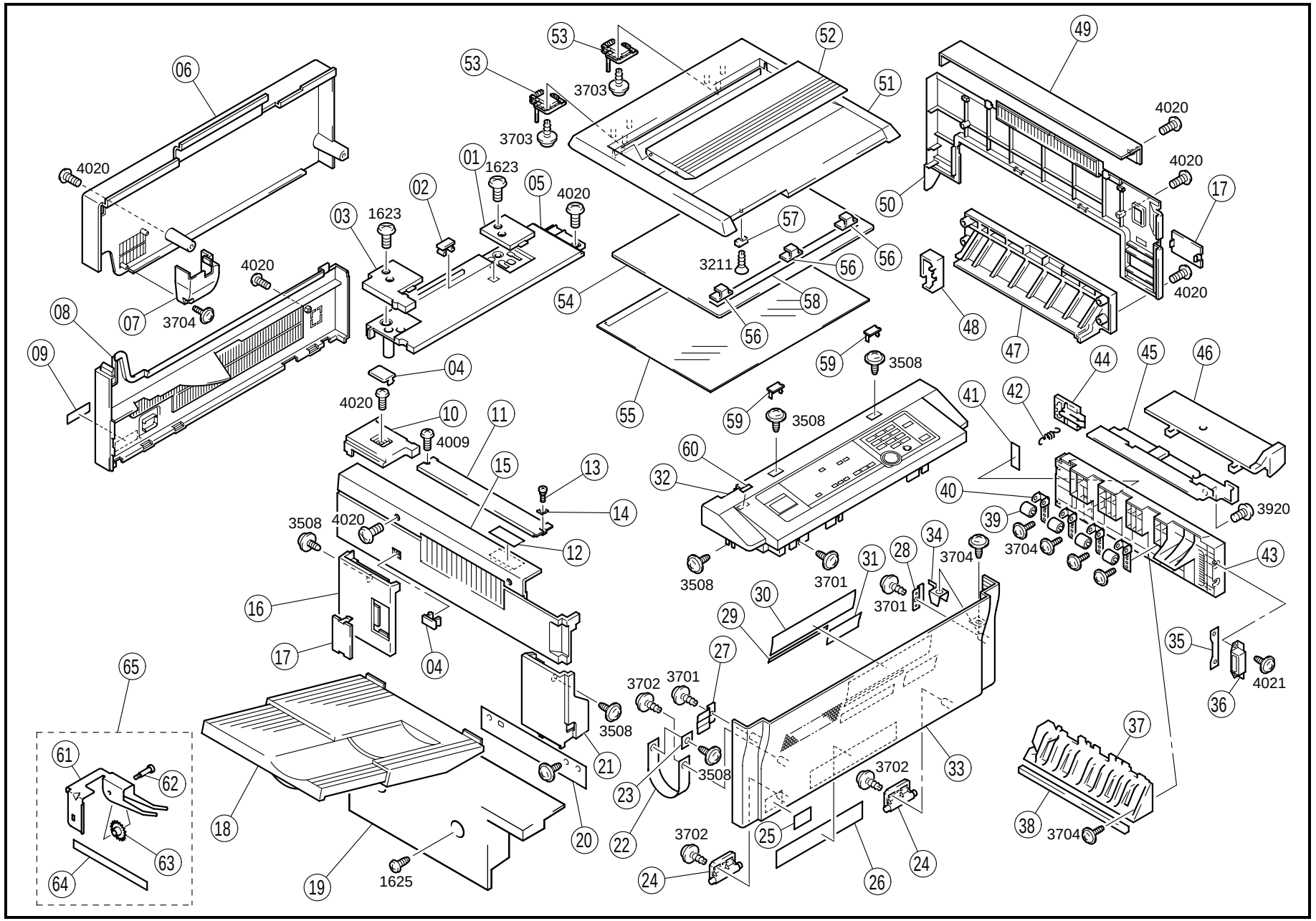
06
4020
07
3704
08
09
03
1623
02
01
1623
05
4020
53
3703
53
3703
52
51
49
4020
4020
50
17
4020
57
3211
56
56
58
56
54
55
48
47
04
4020
10
4009
11
15
13
14
12
3508
4020
16
17
04
59
3508
59
3508
60
32
3508
3701
41
42
44
45
46
40
39
3704
3704
3920
43
34
28
31
3701
30
29
27
3702
3701
3508
3508
21
23
22
25
3702
24
26
24
33
35
36
4021
37
38
3704
65
61
62
63
64
18
19
1625
20

INDEX	PART NO.	PART NAME			QTY	AREA	REMARKS
01AA	1139-1035-01	COVER			1		
02AA	1139-1727-01	COVER			1		
03AA	1174-1042-01	COVER	MID		1		
04AA	1139-1039-01	COVER			2		
05AA	1174-1002-01	TOP COVER-RT	UPR-RR		1		
06AA	1175-1006-01	REAR COVER-UPR	RR-UPR		1		
07AA	1151-4523-01	DUCT			1		
*08AA	1174-7393-02	LABEL CAUTION			1	2706	
09AA	1174-1007-02	REAR COVER	RR-MID		1		
10AA	1174-1041-01	COVER	LFT		1		
*11AA	1151-1753-01	WIDTH SCALE			1	2712	
*11BA	1151-1754-01	WIDTH SCALE			1	2300	
*11CA	1151-1755-01	WIDTH SCALE			1	2401	
12AA	1151-7311-01	LABEL PUSH			1		
13AA	1065-1360-01	SHOULDER SCREW			1		
14AA	1053-3869-01	PLATE SPRING			1		
15AA	1175-1005-02	LEFT COVER-UPR	LFT-UPR		1		
16AA	1174-1033-01	COVER	LFT-MID	(FNT)	1		
17AA	1174-1015-01	COVER			2		
18AA	1174-0167-01	TRAY			1		
19AA	1175-1037-01	LEFT COVER-LWR	LFT-LWR		1		
20AA	1152-2301-01	PLATE			1		
21AA	1174-1031-01	COVER	LFT-MID	(RR)	1		
22AA	1139-1022-01	BAND			1		
23AA	1053-3103-01	PLATE			1		
24AA	1174-1017-01	HINGE			2		
*25AA	1139-7347-01	LABEL			1	0800	
*25BA	1136-7326-01	LABEL			1	2812	
26AA	1151-7320-01	LABEL JAM REMOVAL			1		
27AA	1139-1040-01	PLATE			1		
28AA	1033-3102-01	PLATE			1		
*29AA	1175-7375-01	LABEL	MT TONER		1	2771	
*29BA	1175-7376-01	LABEL	MT TONER		1	2835	
*29CA	1175-7377-01	LABEL	MT TONER		1	2812	
30AA	1151-7317-01	LABEL TONER BOTTLE			1		
31AA	1139-7332-12	LABEL			1		
*32AA	1176-0451-02	CONTROL PANEL	MINOLTA		1	2300	
*32BA	1176-0452-02	CONTROL PANEL	MINOLTA		1	2423	
*32CA	1176-0453-02	CONTROL PANEL	MINOLTA		1	2706	
*32DA	1176-0455-02	CONTROL PANEL			1	2313	
*32EA	1176-0458-02	CONTROL PANEL			1	2712	
*32FA	1176-0453-02	CONTROL PANEL	METRIC		1	2812	
*33AA	1176-1001-02	FRONT COVER	MINOLTA		1	0732	
*33BA	1176-1046-02	FRONT COVER			1	2812	
*33CA	1174-1047-02	FRONT COVER			1	2763	
34AA	1174-1018-01	LEVER			1		
35AA	1139-3141-01	BRACKET			1		
36AA	1273-3535-01	MAGNET CATCH			1		
37AA	1142-3108-01	GUIDE			1		
*38AA	1152-3193-01	SPONGE			1	2706	
39AA	1139-3103-01	ROLL			4		
40AA	1139-3104-01	HOLDER			4		
41AA	1142-7301-12	SEAL			1		
42AA	1139-3146-01	TENSION SPRING			1		
43AA	1142-3105-03	RIGHT COVER-LWR	RT-LWR		1		
44AA	1139-3145-01	COVER			1		
45AA	1139-3144-01	GUIDE			1		
46AA	1174-3130-01	TABLE			1		
47AA	1175-1004-01	RIGHT COVER-MID	RT-MID		1		
48AA	1142-3101-02	COVER			1		
49AA	1174-1009-02	RIGHT COVER	RT-UPR		1		
50AA	1174-1052-01	RIGHT COVER	RT		1		
51AA	1139-1701-04	ORIGINAL COVER			1		
52AA	1139-1702-02	ORIGINAL HOLDER			1		
53AA	1139-1705-01	HINGE			2		
54AA	1139-1704-14	PAD			1		
*55AA	1151-0170-01	ORIGINAL GLASS			1	2712	
*55BA	1151-0171-01	ORIGINAL GLASS			1	2300	
*55CA	1151-0172-01	ORIGINAL GLASS			1	2401	
56AA	1139-1703-02	SLIDER			3		
57AA	9326-2820-11	MAGNET			1		
58AA	1139-1706-01	POLYESTER FILM			1		
59AA	1139-1044-01	COVER			2		
*60AA	1176-7373-01	LABEL			1	2763	
61AA	1174-7801-01	GUIDE PLATE			1		
62AA	1136-7817-01	AXIS			1		
63AA	1136-7818-01	ROWEL			1		
64AA	1136-7823-01	LABEL			1		
65AA	1174-0901-01	MODIFICATION KIT			1		

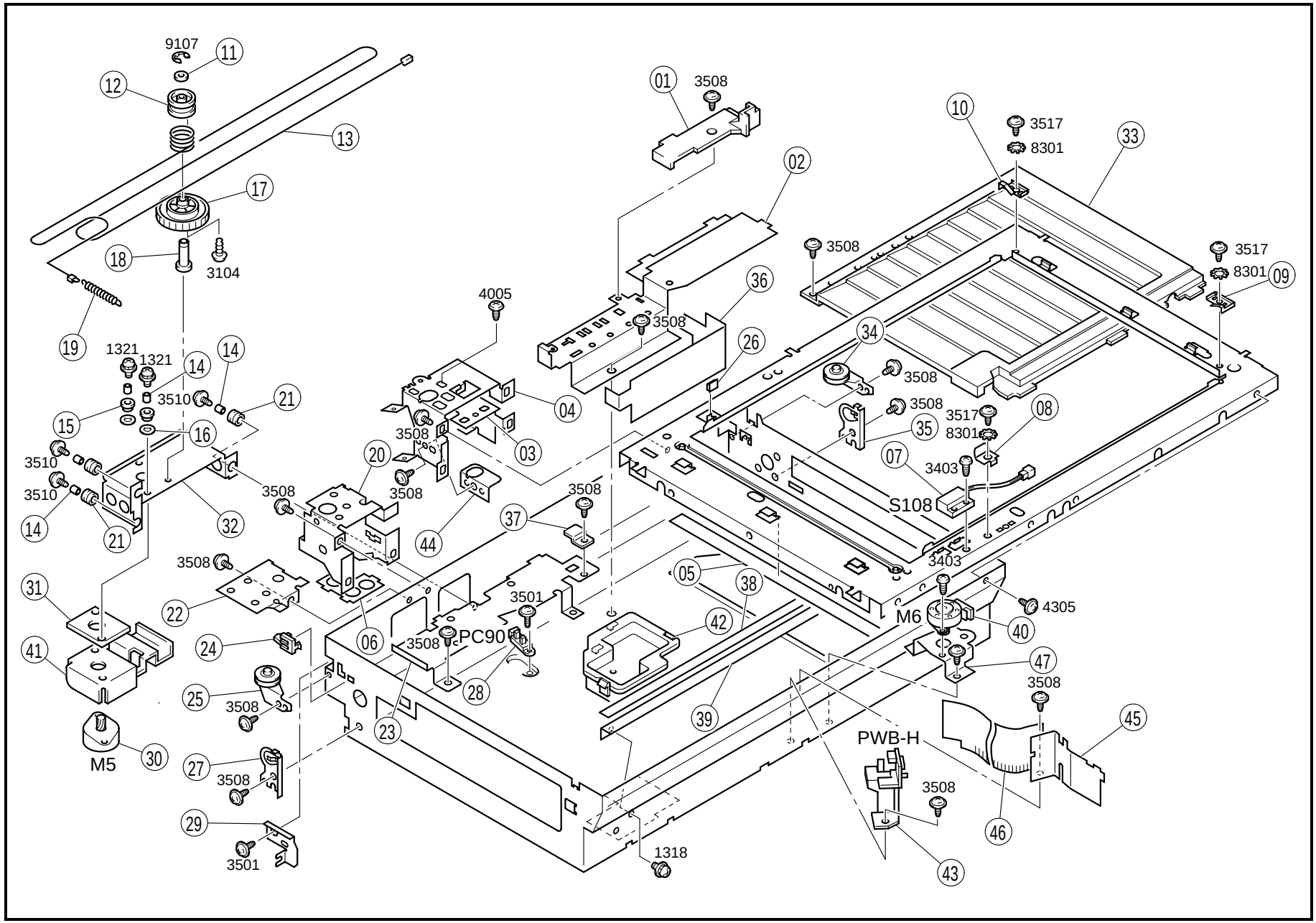
9107
11
12
13
17
18
3104
19
1321
1321
14
14
3510
21
15
16
3510
3510
14
21
32
3508
20
3508
3508
44
4005
04
03
01
3508
02
3508
36
26
3508
10
3517
8301
33
3508
3517
8301
09
34
3508
3508
35
3517
8301
08
07
3403
S108
3508
37
3508
3508
22
31
41
24
06
3501
3508
PC90
28
05
38
42
3403
4305
M6
40
47
3508
45
25
3508
23
39
PWB-H
M5
30
27
3508
29
3501
1318
3508
46
43

INDEX	PART NO.	PART NAME	QTY	AREA	REMARKS
01AA	1151-1355-01	LIGHT SHIELD PLATE	1		
02AA	1151-1322-01	BRACKET	1		
03AA	1151-1330-01	ADJUSTING PLATE	1		
04AA	1151-1314-01	BRACKET RT	1		
05AA	1139-1321-01	SHEET	1		
06AA	1151-1316-01	SUPPORT PLATE LFT	1		
07AA	9334-2610-11	REED SWITCH SIZE (S108)	1		
08AA	1139-1318-12	SUPPORT	1		
09AA	1139-1319-12	SUPPORT	1		
10AA	1139-1320-12	SUPPORT	1		
11AA	1139-1614-01	COLLAR	1		
12AA	1151-1613-01	PULLEY	1		
13AA	1175-1601-01	WIRE	1		
14AA	1139-1625-01	SLEEVE	5		
15AA	1139-1621-01	RETAINING RING	2		
16AA	1200-1422-02	WASHER	2		
17AA	1151-1603-01	GEAR 119T	1		
18AA	1139-1604-01	SHAFT	1		
19AA	1151-1611-01	TENSION SPRING	1		
20AA	1151-1313-01	BRACKET LFT	1		
21AA	1139-1620-01	RETAINING RING	3		
22AA	1139-1333-02	BRACKET	1		
23AA	1151-1325-01	GUIDE PLATE	1		
24AA	1139-1612-01	GUIDE	1		
25AA	1139-0211-01	PULLEY	1		
26AA	1151-1356-01	SEAL	1		
27AA	1151-1326-01	BRACKET LFT	1		
28AA	9335-1310-41	PHOTO INTERRUPTER LENS (PC90)	1		
29AA	1139-1615-01	SET PLATE	1		
30AA	9314-1610-11	MOTOR SCANNER (M5)	1		
31AA	1012-1624-01	RUBBER STRIP	1		
32AA	1151-1602-01	BRACKET	1		
33AA	1139-1532-03	COVER	1		
34AA	1139-0210-01	PULLEY	1		
35AA	1139-1327-01	BRACKET RT	1		
36AA	1151-1539-02	LIGHT SHIELD	1		
37AA	1139-1422-01	CORD CLAMP	1		
38AA	1151-1337-01	TAPE	1		
39AA	1151-1329-01	RAIL 1ST	1		
40AA	9314-1310-21	MOTOR LENS (M6)	1		
41AA	1151-1630-01	BRACKET	1		
42AA	1139-1324-02	HOLDER	1		
43AA	1139-0106-01	PW BOARD-H (PWB-H)	1		
44AA	1151-1354-01	SUPPORT PLATE	1		
45AA	1139-1535-02	BRACKET	1		
46AA	1139-1533-01	SHIELD	1		
47AA	1139-1530-01	BRACKET	1		

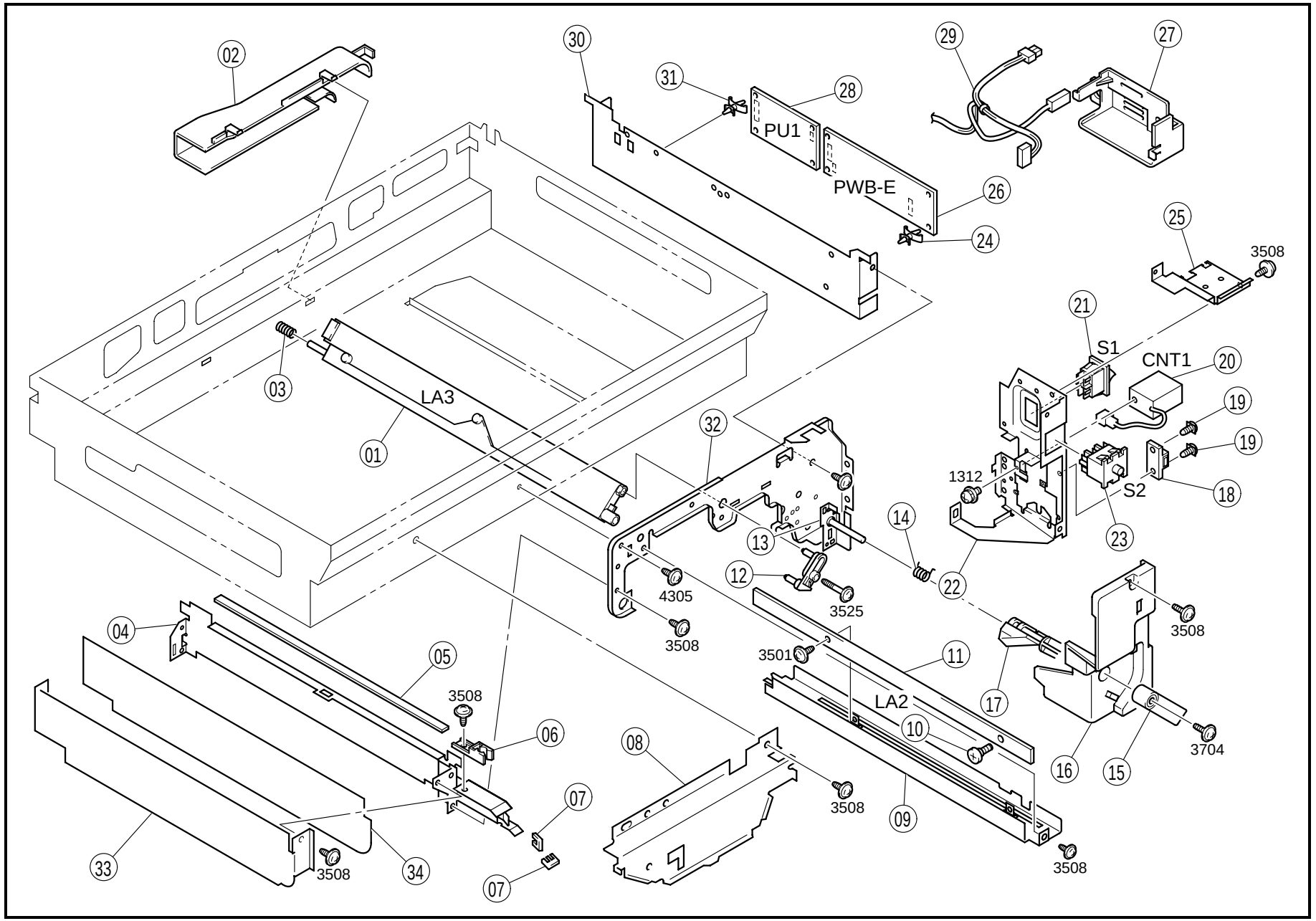
02
30
31
28
29
27
PU1
PWB-E
26
24
25
3508
21
S1
CNT1
20
19
19
18
1312
S2
23
03
LA3
01
32
13
14
22
12
4305
3525
3508
3501
11
LA2
10
3508
17
16
15
3704
04
05
3508
06
08
3508
07
07
09
3508
33
3508
34

INDEX	PART NO.	PART NAME			QTY	AREA	REMARKS	INDEX	PART NO.	PART NAME	QTY	AREA	REMARKS
01AA	1174-6501-01	PWB-LAMP	ERASE	(LA3)	1								
02AA	1139-4504-01	DUCT			1								
03AA	1066-1283-01	PRESSURE SPRING			1								
04AA	1139-2005-01	RAIL			1								
05AA	1139-2029-01	SPONGE			1								
06AA	1139-5015-01	LOCK LEVER			1								
07AA	1139-2030-01	EDGE COVER			2								
08AA	1139-1038-01	COVER			1								
09AA	1139-4031-02	BRACKET			1								
10AA	1139-4033-02	SHOULDER SCREW			1								
11AA	9351-1810-11	PWB-LAMP	ERASE	(LA2)	1								
12AA	1139-4034-03	HOLDER			1								
13AA	1151-0208-01	AXLE PLATE			1								
14AA	1139-2026-01	TORSION SPRING			1								
15AA	1139-2027-02	LOCK RELEASE LEVER			1								
16AA	1174-1023-01	COVER	RT		1								
17AA	1139-2033-03	LOCK LEVER			1								
18AA	1500-2640-04	MAGNET CATCH			1								
19AA	1139-2338-01	TAPPING SCREW			2								
20AA	9323-1410-11	COUNTER	TOTAL	(CNT1)	1								
21AA	9332-5810-11	SWITCH	MAIN	(S1)	1								
22AA	1174-2301-01	BRACKET			1								
23AA	9331-1810-11	MICRO SWITCH	SAFETY	(S2)	1								
24AA	9384-1710-71	PWB SUPPORT			4								
25AA	1174-2383-01	PLATE			1								
26AA	1139-0105-03	PW BOARD-E		(PWB-E)	1								
*27AA	1139-2316-02	COVER			1	0703							
*27BA	1149-2316-01	COVER			1	2706							
*28AA	9325-3010-31	PWB-REGULATOR	POWER	(PU1)	1	2505							
*28BA	9325-3010-21	PWB-REGULATOR	POWER	(PU1)	1	2619							
*28CA	9325-3610-11	PWB-PU	POWER	(PU1)	1	2706							
*29AA	1174-6801-02	HARNESS			1	2505							
*29BA	1174-6802-02	HARNESS			1	2619							
*29CA	1174-6817-02	HARNESS			1	2706							
30AA	1151-2004-02	REINFORCE PLATE			1								
31AA	9384-1900-56	PWB SUPPORT 6.35H			4								
32AA	1151-2002-02	FRAME	FNT		1								
33AA	1151-2051-01	PLATE			1								
34AA	1151-2052-01	SHEET			1								

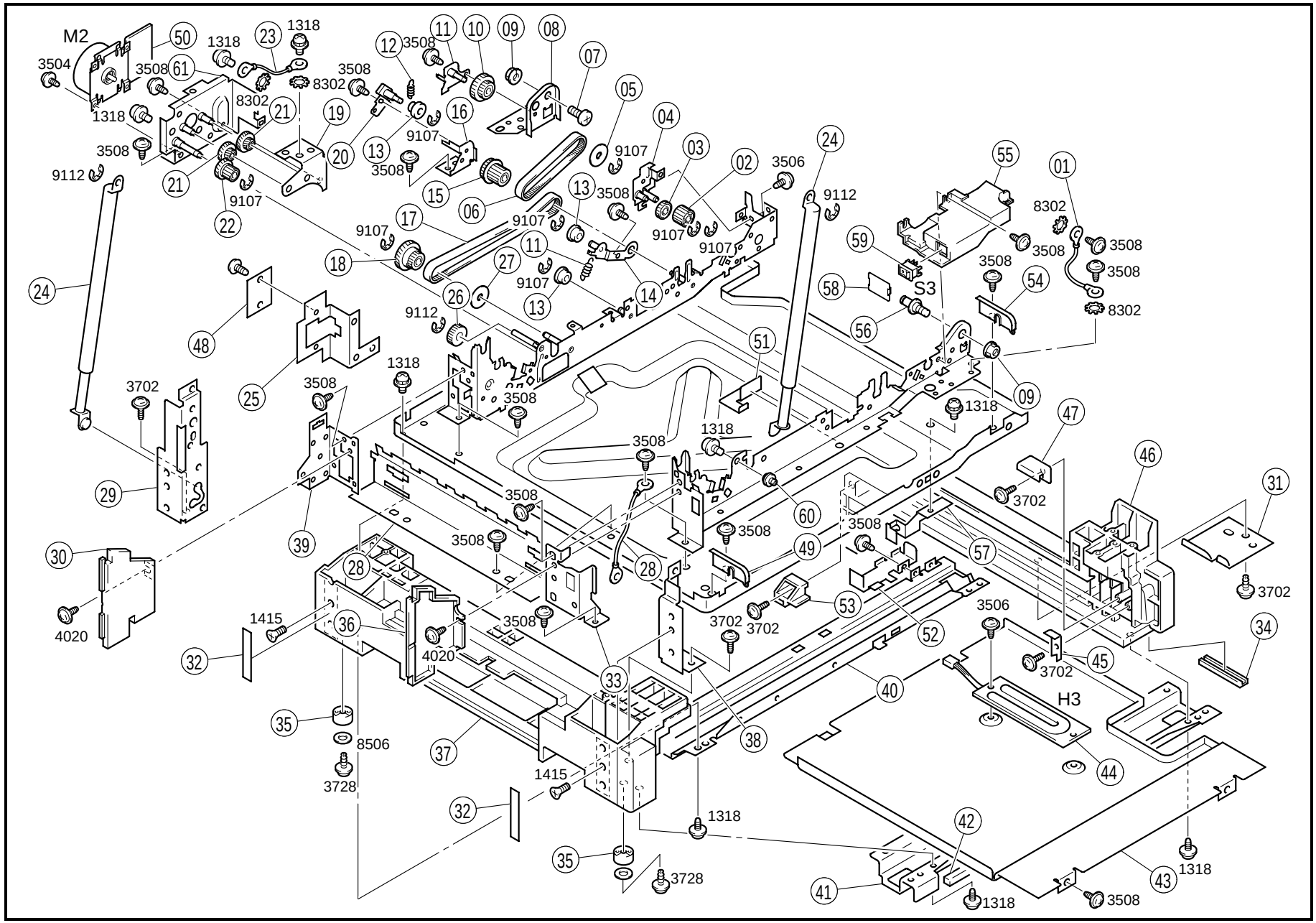
M2
S3
H3
01
02
03
04
05
06
07
08
09
10
11
12
13
14
15
16
17
18
19
20
21
22
23
24
25
26
27
28
29
30
31
32
33
34
35
36
37
38
39
40
41
42
43
44
45
46
47
48
49
50
51
52
53
54
55
56
57
58
59
60
61
1318
3508
8302
9107
9112
3504
3506
3702
4020
1415
8506
3728

INDEX	PART NO.	PART NAME	QTY	AREA	REMARKS
01AA	1061-6845-03	GROUND WIRE	1		
02AA	1139-3136-01	GEAR 16T	1		
03AA	1300-3122-32	GEAR 18T	1		
04AA	1151-0215-01	BRACKET	1		
05AA	1151-2525-01	WASHER	1		
06AA	1151-2578-01	TIMING BELT	1		
07AA	1100-1362-11	SHOULDER SCREW	1		
08AA	1139-2008-03	SUPPORT	1		
09AA	1052-2306-01	NUT	2		
10AA	1151-2518-01	PLY GEAR 30/30T	1		
11AA	1151-0213-01	BRACKET	1		
12AA	1139-2530-01	TENSION SPRING	2		
13AA	1067-2513-01	PULLEY	3		
14AA	1151-0212-01	BRACKET	1		
15AA	1151-2516-02	PLY GEAR 22/30T	1		
16AA	1151-2521-01	BRACKET	1		
17AA	1151-2515-01	TIMING BELT	1		
18AA	1151-2512-01	PLY GEAR 30/30T	1		
19AA	1151-2502-01	BRACKET	1		
20AA	1151-0214-01	BRACKET	1		
21AA	1151-2503-01	GEAR 15/56T	2		
22AA	1151-2505-01	GEAR 16/24T	1		
23AA	1149-6842-01	HARNESS	1		
24AA	1139-2009-01	BALANCER	2		
25AA	1151-2320-02	BRACKET	1		
26AA	1139-2507-01	GEAR 20T	1		
27AA	1151-2579-01	WASHER	1		
28AA	1151-2102-03	BRACKET	1		
29AA	1151-3210-02	BRACKET RR	1		
30AA	1174-1014-01	COVER RR	1		
31AA	1142-3007-01	PLATE	1		
32AA	1142-7301-12	SEAL	2		
33AA	1151-2103-01	REINFORCE PLATE FNT	1		
34AA	1139-3215-01	HANDLE	2		
35AA	1065-2053-01	RUBBER FOOT	2		
36AA	1174-1013-01	COVER FNT	1		
37AA	1142-3201-06	LEFT RAIL	1		
38AA	1151-3209-01	BRACKET FNT	1		
39AA	1151-2104-02	REINFORCE PLATE RR	1		
40AA	1142-3204-01	REINFORCE PLATE RR	1		
41AA	1142-3203-01	REINFORCE PLATE FNT	1		
*42AA	1152-3263-01	SPONGE	1	2706	
*43AA	1142-3059-13	HOLDER OPTION	1	2517	
*44AA	9352-6310-11	HEATER OPTION (H3)	1	2517	
45AA	1139-3214-01	PLATE	1		
46AA	1142-3202-05	RIGHT RAIL	1		
47AA	1139-3212-02	POSITIONING PLATE FNT	1		
48AA	1158-2363-01	COVER	1		
49AA	1174-1019-01	HINGE LFT	1		
50AA	9314-2610-11	PWB-MOTOR MAIN (M2)	1		
51AA	1151-2369-01	COVER	1		
52AA	1152-2370-02	COVER	1		
53AA	1139-3213-02	POSITIONING PLATE RR	1		
54AA	1174-1020-01	HINGE RT	1		
55AA	1174-2308-01	GUIDE	1		
56AA	1139-2035-01	PIN	1		
57AA	1139-3023-02	BRACKET	1		
58AA	1174-2382-01	COVER	1		
*59AA	9332-5310-21	SWITCH OPTION (S3)	1	2517	
60AA	1151-5550-01	PIN	1		
61AA	1151-0211-01	BRACKET	1		

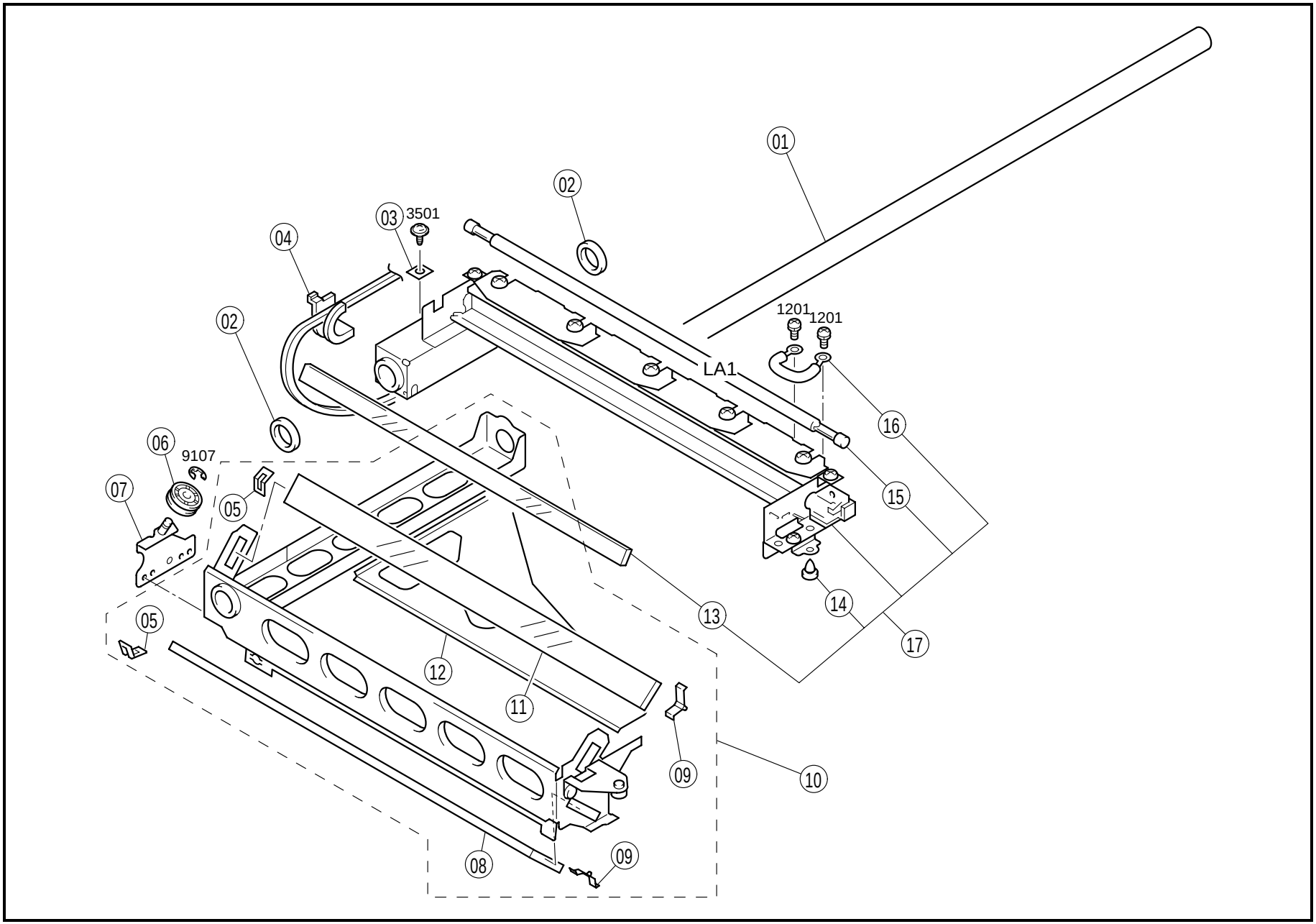
01
02
03
3501
04
02
1201
1201
LA1
16
15
14
17
13
06
9107
07
05
05
12
11
09
10
08
09

INDEX	PART NO.	PART NAME			QTY	AREA	REMARKS	INDEX	PART NO.	PART NAME	QTY	AREA	REMARKS
01AA	1139-1328-02	SHAFT			1								
02AA	1139-1334-02	PAD			2								
03AA	1151-1413-01	SET PLATE			1								
04AA	1174-1457-01	GUIDE			1								
05AA	1065-1504-02	PLATE SPRING			2								
06AA	1139-1608-01	BALL BEARING			1								
07AA	1139-1458-04	BRACKET			1								
08AA	1139-1303-01	MIRROR	3RD		1								
09AA	1065-1506-02	PLATE SPRING			2								
10AA	1151-0156-03	2ND SLIDER			1								
11AA	1151-7802-01	MIRROR	2ND		1								
12AA	1139-1461-01	LIGHT SHIELD			1								
13AA	1139-7801-01	MIRROR	1ST		1								
14AA	1067-1415-02	GUIDE			1								
*15AA	9351-2610-11	TUBE LAMP	EXPLAMP	(LA1)	1	2505							
*15BA	9351-2610-21	TUBE LAMP	EXPLAMP	(LA1)	1	2612							
16AA	1151-7801-01	THERMAL FUSE			1								
*17AA	1151-0152-02	SCANNER UNIT			1	2505							
*17BA	1151-0153-02	SCANNER UNIT			1	2612							

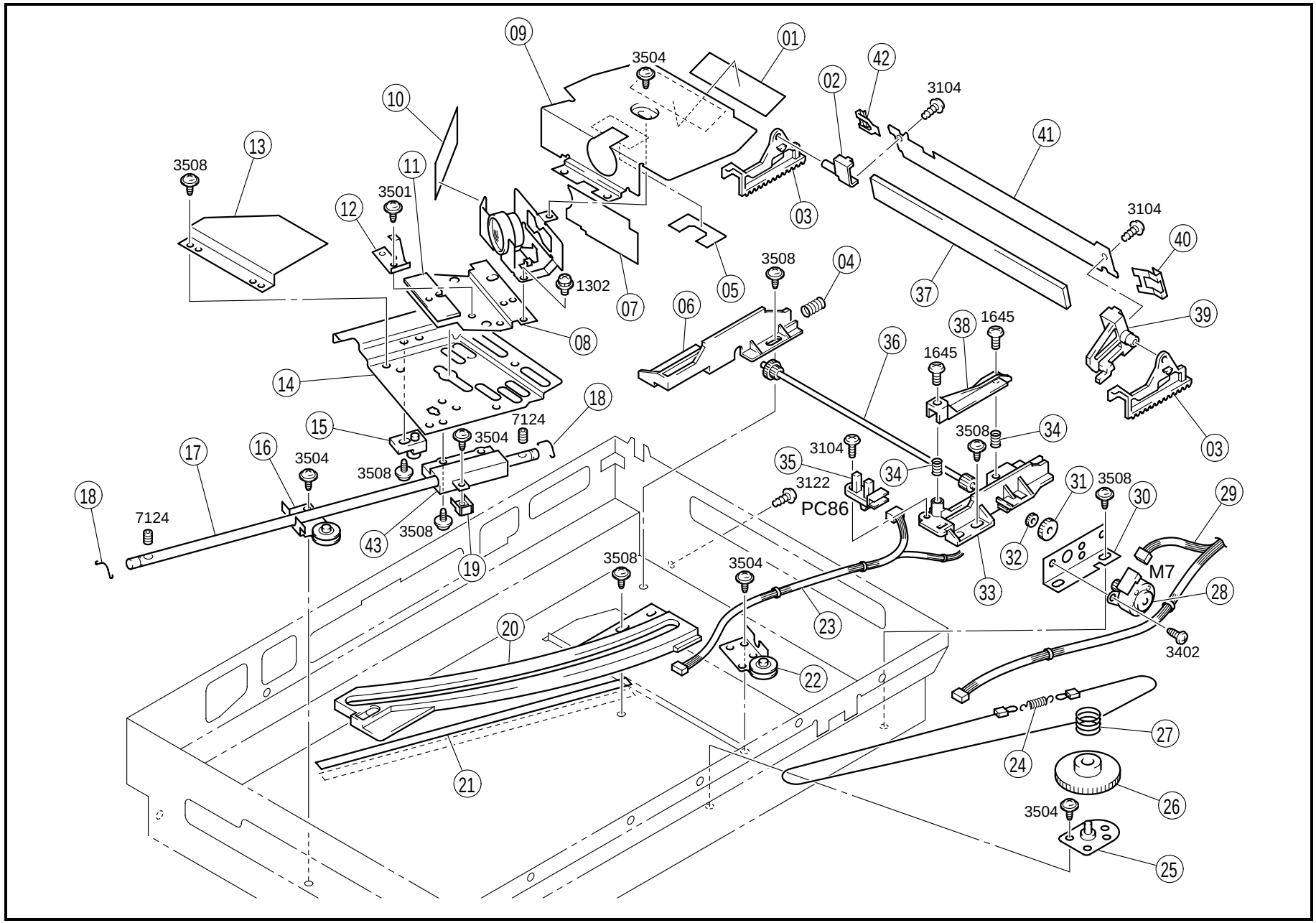
09
01
3504
42
02
3104
10
41
13
3508
11
3501
12
03
3104
40
1302
07
05
3508
04
37
06
39
38
1645
08
36
1645
14
18
7124
15
3504
3508
34
17
16
3504
3104
35
34
3508
3122
31
3508
30
29
18
7124
PC86
43
3508
19
32
3508
3504
M7
33
28
20
23
3402
22
27
24
21
26
3504
25

INDEX	PART NO.	PART NAME	QTY	AREA	REMARKS	INDEX	PART NO.	PART NAME	QTY	AREA	REMARKS
01AA	1139-1548-01	SHIELD CLOTH	1			41AA	1139-1560-01	BRACKET	1		
02AA	1139-1552-01	HOLDER	1			42AA	1139-1562-01	PLATE SPRING	1		
03AA	1139-1553-02	RACK GEAR	2			43AA	1139-1513-02	HOLDER	1		
04AA	1400-1132-06	PRESSURE SPRING	1								
05AA	1139-1537-01	SPONGE	1								
06AA	1139-1556-01	RAIL	1								
07AA	1151-1538-01	POLYESTER FILM	1								
08AA	1139-0207-03	BRACKET	1								
09AA	1151-1531-01	COVER	1								
10AA	1151-1534-01	POLYESTER FILM	1								
11AA	1139-1517-01	PLATE	1								
12AA	1139-1505-03	PLATE SPRING	1								
13AA	1139-1516-02	GUIDE PLATE	1								
14AA	1151-1508-01	BASE FRAME	1								
15AA	1136-1423-01	BUSH	1								
16AA	1139-0201-01	WIRE PULLEY	1								
17AA	1139-1521-01	SHAFT	1								
18AA	1139-1523-02	SPRING	2								
19AA	1139-1509-01	SUPPORT PLATE	1								
20AA	1139-1510-01	CAM 0	1								
20BA	1139-1511-01	CAM -	1								
20CA	1139-1512-01	CAM +	1								
21AA	1151-1571-01	TAPE	1								
22AA	1139-0202-01	WIRE PULLEY	1								
23AA	1174-6812-01	HARNESS	1								
24AA	1139-1518-12	TENSION SPRING	1								
25AA	1065-0229-01	BRACKET	1								
26AA	1065-1757-01	PLY GEAR 108T	1								
27AA	1174-1525-01	WIRE	1								
28AA	9314-1310-31	MOTOR MIRROR (M7)	1								
29AA	1139-6825-01	HARNESS	1								
30AA	1139-1561-01	BRACKET	1								
31AA	1139-1557-01	GEAR 12/36T	1								
32AA	1139-1558-01	GEAR 12/15T	1								
33AA	1139-1555-02	RAIL	1								
34AA	1400-1133-08	PRESSURE SPRING	2								
35AA	9335-1310-41	PHOTO INTERRUPTER MIRROR (PC86)	1								
36AA	1139-1559-01	GEAR 14/18T	1								
37AA	1139-1304-01	MIRROR 4TH	1								
38AA	1139-1563-01	CAM	1								
39AA	1139-1551-02	HOLDER	1								
40AA	1139-1564-01	PLATE SPRING	1								

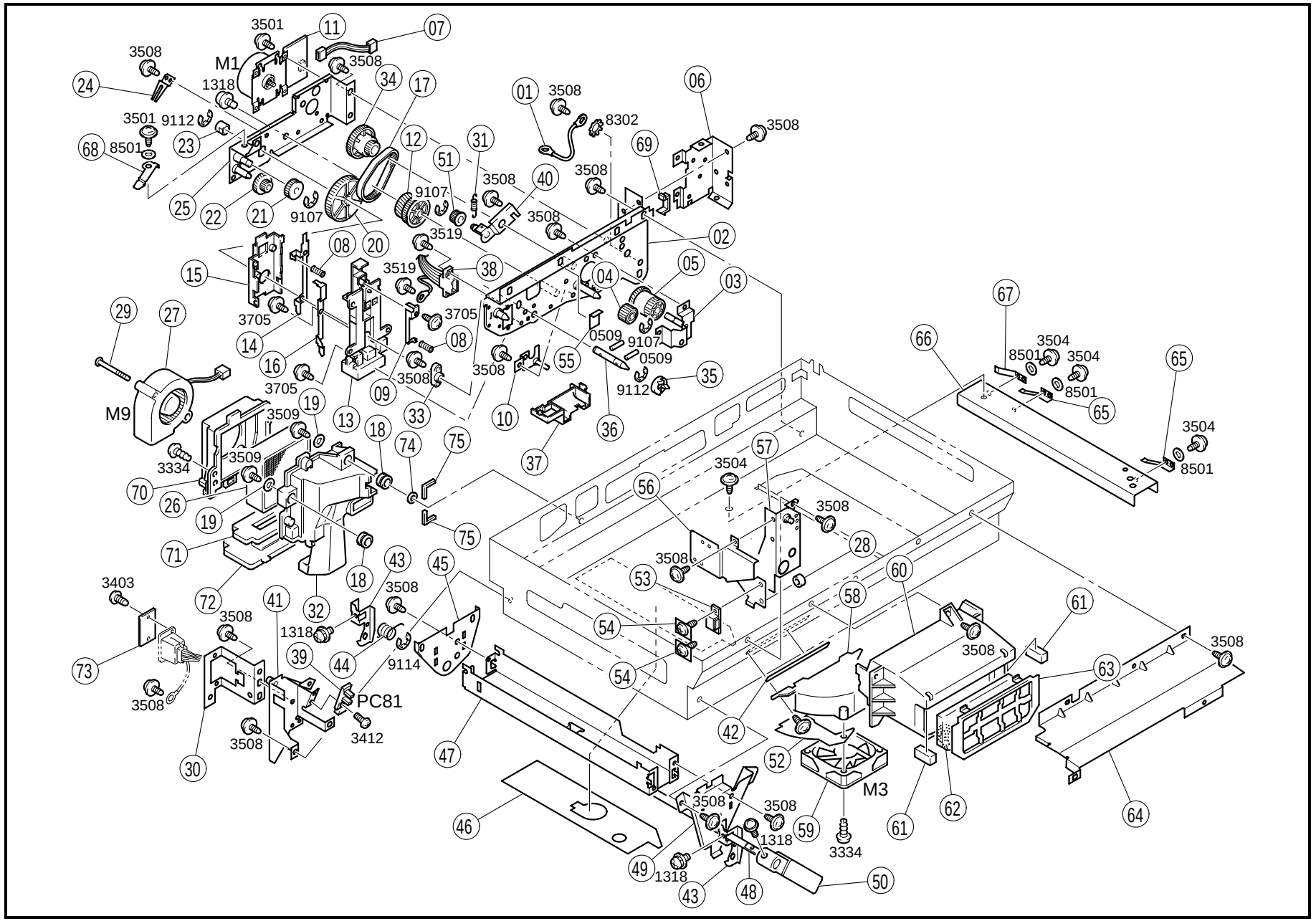
M1
M9
M3
PC81
3501
3508
1318
9112
8501
8302
9107
3519
3705
3509
3334
3403
3412
9114
0509
3504
01
02
03
04
05
06
07
08
09
10
11
12
13
14
15
16
17
18
19
20
21
22
23
24
25
26
27
28
29
30
31
32
33
34
35
36
37
38
39
40
41
42
43
44
45
46
47
48
49
50
51
52
53
54
55
56
57
58
59
60
61
62
63
64
65
66
67
68
69
70
71
72
73
74
75

INDEX	PART NO.	PART NAME	QTY	AREA	REMARKS
01AA	1061-6845-03	GROUND WIRE	1		
02AA	1151-0203-02	FRAME	1		
03AA	1151-0209-01	BRACKET	1		
04AA	1151-2565-01	GEAR 20T	1		
05AA	1151-2561-01	GEAR 24/66T	1		
06AA	1151-2333-03	BRACKET	1		
07AA	1151-6830-01	HARNESS	1		
08AA	1400-1122-04	PRESSURE SPRING	2		
09AA	1151-4024-01	TERMINAL	1		
10AA	1174-0202-01	BRACKET	1		
11AA	9314-2610-11	PWB-MOTOR PC DRIVE (M1)	1		
12AA	1151-2555-01	GEAR 54/60T	1		
13AA	1151-4021-01	HOLDER	1		
14AA	1139-4022-01	TERMINAL	1		
15AA	1139-4025-01	COVER	1		
16AA	1151-4023-01	TERMINAL	1		
17AA	1151-2576-01	TIMING BELT	1		
18AA	1132-2044-01	SPACER	2		
19AA	1200-1431-01	WASHER	2		
20AA	1151-2557-01	GEAR 112T	1		
21AA	1151-2567-01	GEAR 29T	1		
22AA	1151-2563-01	GEAR 14/35T	1		
23AA	1200-3131-03	BUSHING	1		
24AA	1139-2559-01	GROUND PLATE	1		
25AA	1151-0210-01	BRACKET	1		
26AA	1151-4509-01	OZONE FILTER	1		
27AA	9313-1810-31	MOTOR COOLING (M9)	1		
28AA	1174-2388-01	SPACER	1		
29AA	1151-4524-01	TAPPING SCREW	2		
30AA	1151-2321-01	BRACKET	1		
31AA	1151-2575-01	TENSION SPRING	1		
32AA	1151-4501-02	DUCT	1		
33AA	1065-2753-01	BUSHING	1		
34AA	1151-2569-01	GEAR 24/80T	1		
35AA	1139-2560-01	JOINT	1		
36AA	1139-2558-02	SHAFT	1		
37AA	1139-4506-01	DUCT	1		
38AA	1151-6808-12	HARNESS	1		
39AA	9335-1310-51	PHOTO INTERRUPTER SCANNER (PC81)	1		
40AA	1151-0217-01	BRACKET	1		
41AA	1151-0207-02	BRACKET	1		
42AA	1151-1653-01	CUSHION	1		
43AA	1139-2014-01	PAWL	2		
44AA	1139-2016-01	TORSION SPRING	1		
45AA	1139-2020-01	BRACKET	1		
46AA	1139-2041-02	SHIELD	1		
47AA	1139-2021-02	BRACKET	1		
48AA	1139-2018-01	SHAFT	1		
49AA	1139-2019-01	BRACKET	1		
50AA	1077-2101-02	LOCK RELEASE LEVER	1		
51AA	1151-2574-01	PULLEY 20T	1		
52AA	1139-1652-01	COVER	1		
53AA	1500-2640-04	MAGNET CATCH	1		
54AA	1139-2338-01	TAPPING SCREW	2		
55AA	1151-2105-01	POLYESTER FILM	1		
56AA	1139-2323-01	BRACKET	1		
57AA	1139-0205-01	BRACKET	1		
58AA	1139-1651-01	DUCT	1		
59AA	9313-1810-11	MOTOR COOLING (M3)	1		
60AA	1139-1010-04	COVER	1		
61AA	1139-1011-01	SPONGE	2		
62AA	1139-1012-02	FILTER	1		
63AA	1139-1036-03	SET PLATE	1		
64AA	1139-1030-01	BRACKET	1		
65AA	1139-4515-01	PLATE SPRING	2		
66AA	1139-4505-02	BRACKET	1		
67AA	1139-4512-01	GROUND PLATE	1		
68AA	1151-2580-02	PLATE SPRING	1		
69AA	1065-5872-01	CORD CLAMP	1		
70AA	1151-4520-01	DUCT	1		
71AA	1151-4522-01	SEAL	1		
72AA	1151-4521-01	COVER	1		
73AA	1158-2363-01	COVER	1		
74AA	1151-4528-01	SPACER	1		
75AA	1151-4529-01	CUSHION	2		

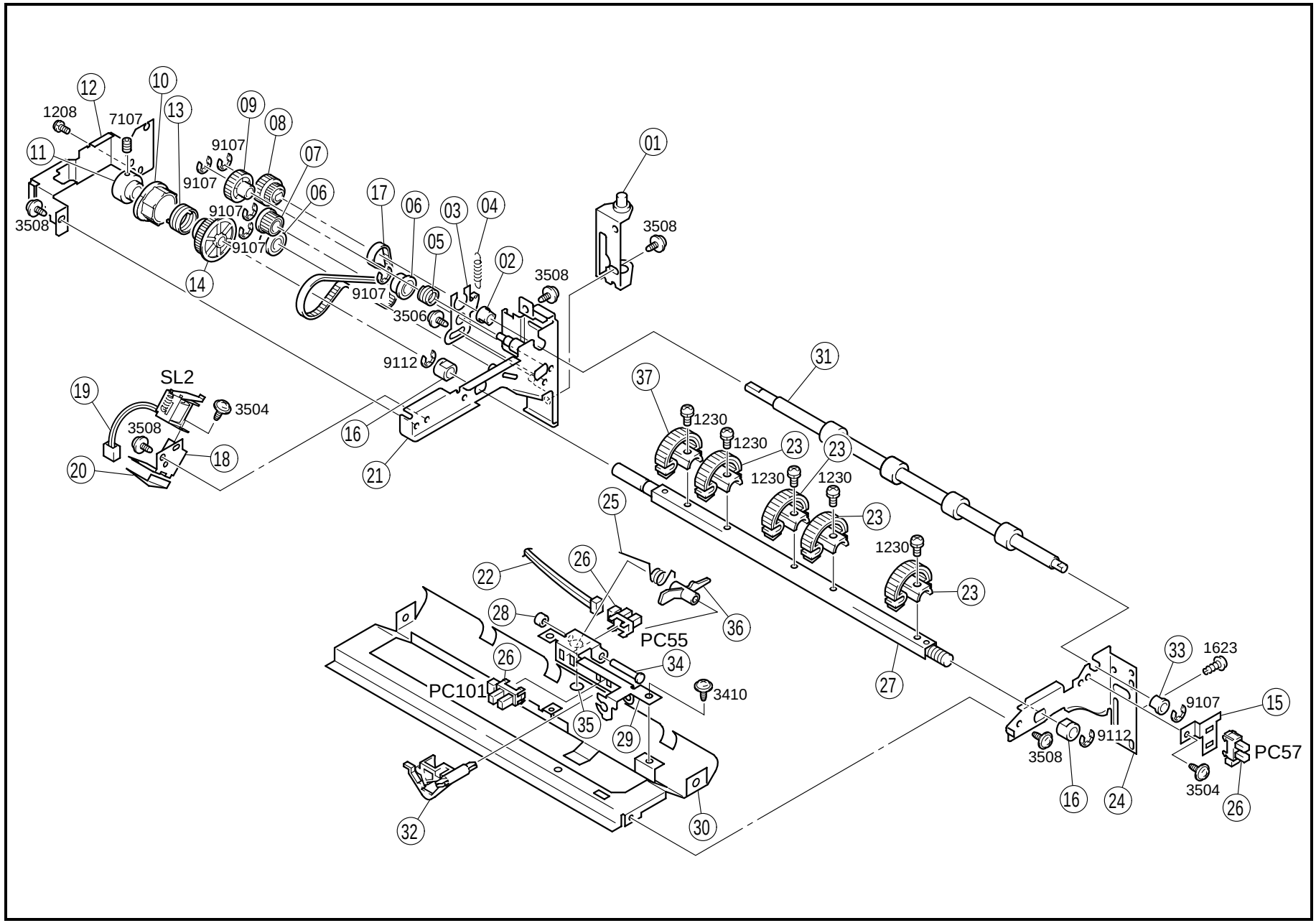
12
10
1208
7107
13
09
08
11
9107
07
9107
06
9107
3508
14
17
06
03
04
05
02
01
3508
3508
9107
3506
9112
SL2
19
3504
3508
18
20
16
21
37
31
1230
1230
23
23
1230
1230
23
25
1230
23
22
26
28
36
PC55
26
34
PC101
3410
35
29
32
30
27
33
1623
9107
15
3508
9112
PC57
16
24
3504
26

INDEX	PART NO.	PART NAME	QTY	AREA	REMARKS	INDEX	PART NO.	PART NAME	QTY	AREA	REMARKS
01AA	1142-3106-01	AXLE PLATE	1								
02AA	1200-3121-07	BUSHING	1								
03AA	1151-0216-01	BRACKET	1								
04AA	1139-3079-01	TENSION SPRING	1								
05AA	1139-3099-01	TORSION SPRING	1								
06AA	1067-2513-01	PULLEY	2								
07AA	1067-2566-01	PULLEY 18T	1								
08AA	1151-3137-02	PLY GEAR 24/16T	1								
09AA	1139-3074-01	GEAR 18T	1								
10AA	1139-3009-02	RATCHET	1								
11AA	1139-3008-01	ARBOR	1								
12AA	1139-3057-01	BRACKET	1								
13AA	1139-3010-02	CLUTCH SPRING	1								
14AA	1151-3007-01	PULLEY 54T	1								
15AA	1139-3134-01	BRACKET	1								
16AA	1200-3134-16	BUSHING	2								
17AA	1142-3065-01	TIMING BELT	1								
18AA	1139-3068-01	BRACKET	1								
19AA	9321-2310-32	SOLENOID TAKE-UP (SL2)	1								
20AA	1139-2346-01	PLATE	1								
21AA	1152-0220-01	REAR FRAME RR	1								
22AA	1151-6805-01	HARNESS	1								
23AA	1151-3001-01	PAPER FEED ROLLER	4								
24AA	1142-3005-01	FRONT FRAME FNT	1								
25AA	1139-3131-01	TORSION SPRING	1								
26AA	9335-1310-31	PHOTO INTERRUPTER (PC55,57,101)	3								
27AA	1151-0168-02	SHAFT	1								
28AA	1200-2105-05	COLLAR	1								
29AA	1139-3053-03	BRACKET	1								
30AA	1139-3003-14	GUIDE PLATE	1								
31AA	1151-3110-02	ROLLER	1								
32AA	1139-3051-02	ACTUATOR	1								
33AA	1200-3121-09	BUSHING	1								
34AA	1200-5212-04	PIN	1								
35AA	1139-3156-01	SEAL	1								
36AA	1139-3127-01	ACTUATOR	1								
*37AA	1151-3001-01	PAPER FEED ROLLER	1	0400							

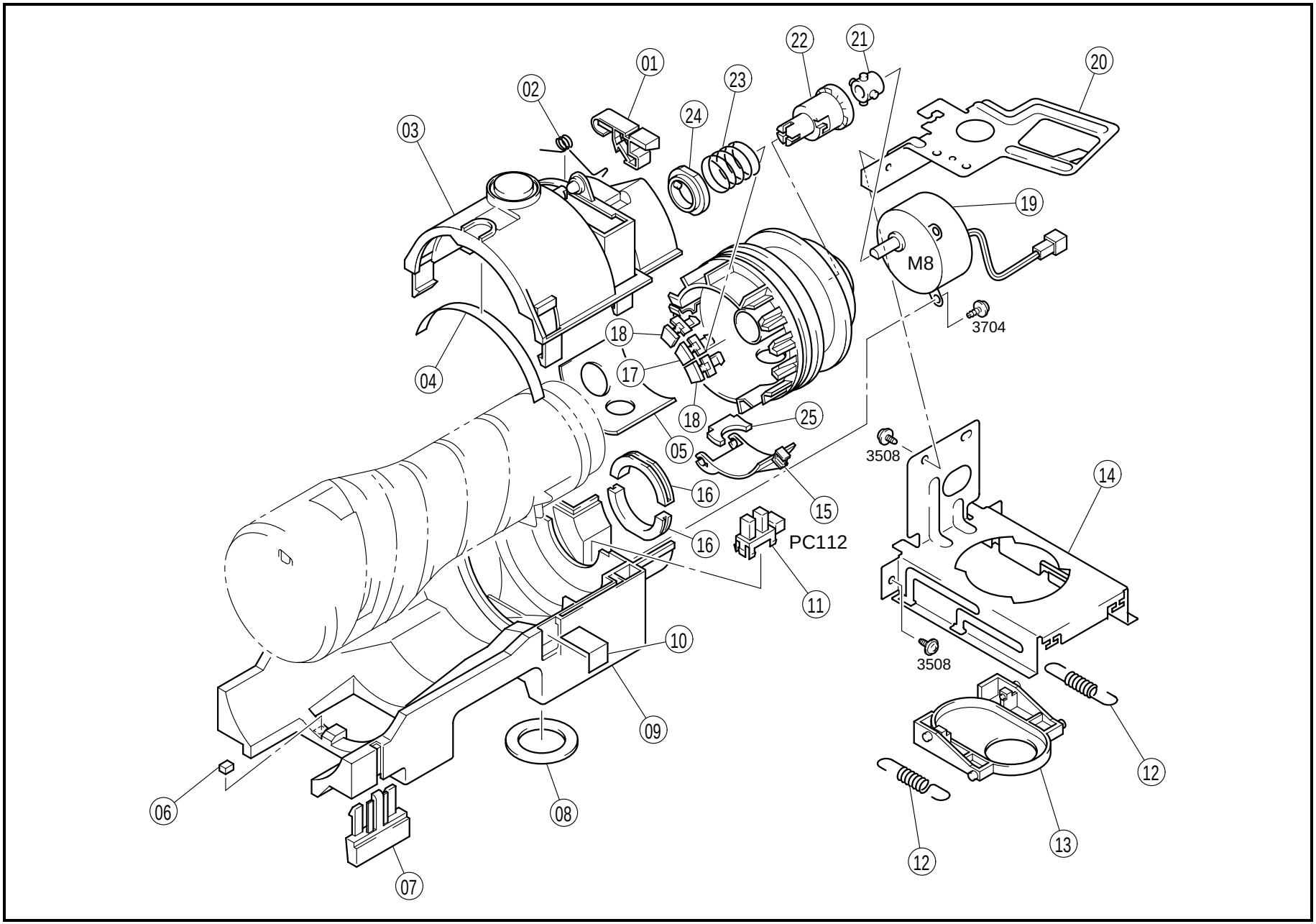
01
02
03
04
05
06
07
08
09
10
11
12
12
13
14
15
16
16
17
18
18
19
20
21
22
23
24
25
M8
3704
3508
3508
PC112

INDEX	PART NO.	PART NAME			QTY	AREA	REMARKS	INDEX	PART NO.	PART NAME	QTY	AREA	REMARKS
01AA	1139-5021-01	LOCK LEVER			1								
02AA	1139-5022-01	TORSION SPRING			1								
03AA	1139-5002-02	COVER	UPR		1								
04AA	1139-5026-01	POLYESTER FILM			1								
05AA	1139-5010-01	SPONGE			1								
06AA	1142-5029-01	CUSHION			1								
07AA	1139-5020-02	LEVER			1								
08AA	1139-5009-01	SPONGE			1								
09AA	1139-5003-02	HOPPER BODY	LWR		1								
10AA	1149-5034-01	SEAL			1								
11AA	9335-1310-31	PHOTO INTERRUPTER	HOME	(PC112)	1								
12AA	1139-5006-01	TENSION SPRING			2								
13AA	1139-5005-01	SHUTTER			1								
14AA	1139-5004-03	FRAME			1								
15AA	1174-5012-02	HOLDER			1								
16AA	1139-5023-01	SUPPORT			2								
17AA	1139-5018-04	DETECTING PLATE	MINOLTA		1	0703							
18AA	1139-5018-04	DETECTING PLATE			2								
19AA	9312-1610-11	MOTOR	REPLEN	(M8)	1								
20AA	1139-5029-01	BRACKET			1								
21AA	1151-5024-01	PAWL			1								
22AA	1151-5031-02	SHAFT			1								
23AA	1151-5033-02	PRESSURE SPRING			1								
* 24AA	1151-5032-01	COLLAR			1								
25AA	1139-5017-02	SPONGE			1								

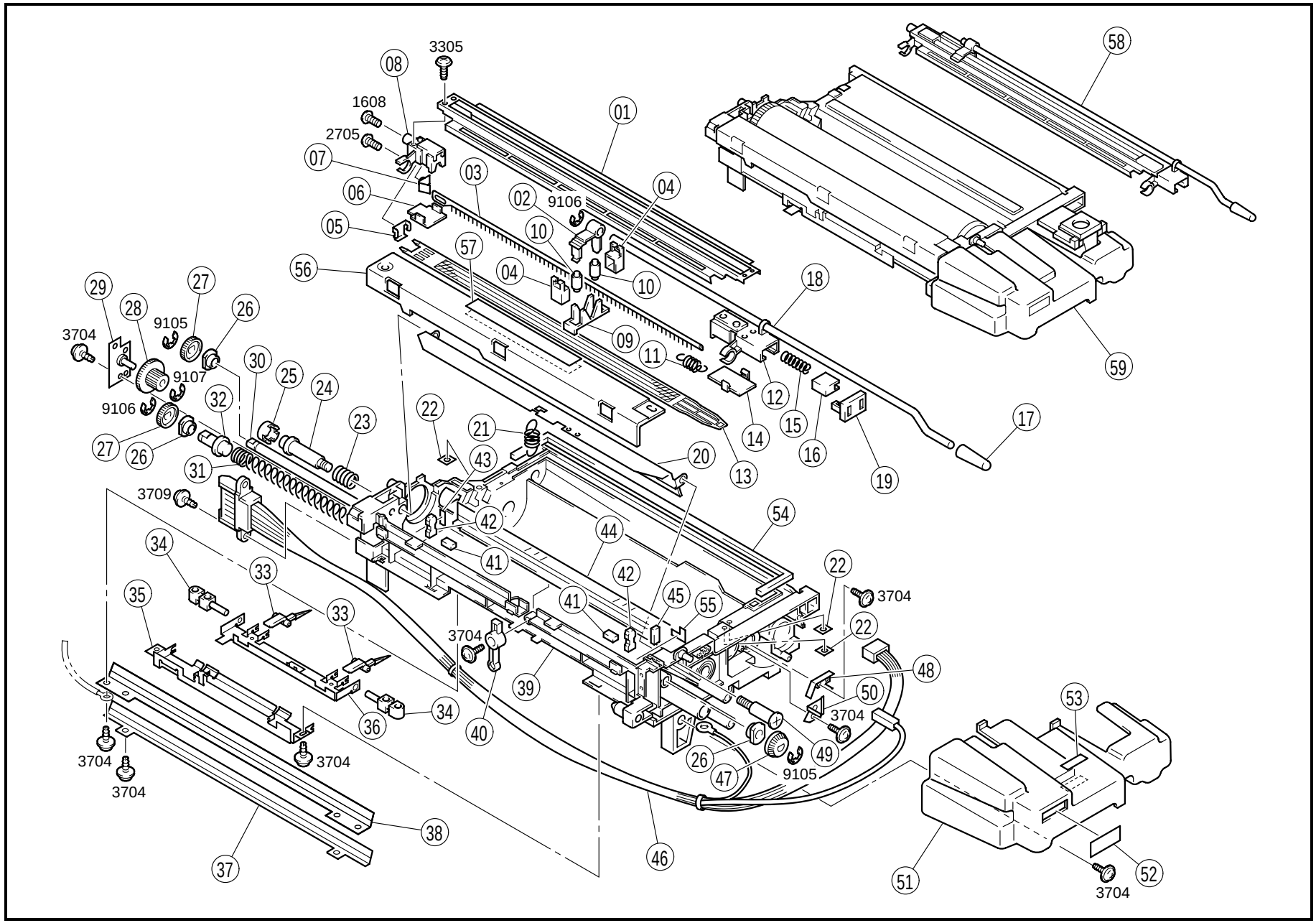
3305
08
1608
2705
07
06
05
01
03
02
9106
04
10
57
56
04
10
09
11
18
12
15
14
16
13
19
17
58
59
29
28
27
26
3704
9105
9107
9106
27
26
30
25
24
32
23
22
21
43
20
31
3709
42
44
54
41
34
33
35
33
42
41
45
55
22
3704
22
3704
39
48
50
3704
49
26
47
9105
53
34
36
40
3704
3704
3704
38
37
46
51
52
3704

INDEX	PART NO.	PART NAME	QTY	AREA	REMARKS
01AA	1139-4254-01	HOUSING	1		
02AA	1139-4256-01	SUPPORT	1		
03AA	1139-4253-02	CORONA PLATE	1		
04AA	1139-4260-01	HOLDER	2		
05AA	1139-4262-01	TERMINAL	1		
06AA	1139-4265-01	COVER	1		
07AA	1139-4255-01	TERMINAL	1		
08AA	1139-4252-01	HOLDER	1		
09AA	1139-4258-01	HOLDER	1		
10AA	1139-4257-01	ROLL	2		
11AA	1139-4263-01	TENSION SPRING	1		
12AA	1139-4251-02	HOLDER	1		
13AA	1139-4261-01	GRID	1		
14AA	1139-4264-01	COVER	1		
15AA	1400-1134-07	PRESSURE SPRING	1		
16AA	1035-4904-01	HOLDER	1		
17AA	1139-4069-01	CAP	1		
18AA	1139-4259-01	SHAFT	1		
19AA	1139-4268-01	COVER	1		
20AA	1139-5711-17	CLEANING BLADE	1		
21AA	1151-5750-01	TENSION SPRING	1		
22AA	1100-3130-08	PLATE NUT	3		
23AA	1400-1154-06	PRESSURE SPRING	1		
24AA	1139-5710-13	SHOULDER SCREW	1		
25AA	1036-4524-02	SLIDER	1		
26AA	1067-5508-01	BUSHING	3		
27AA	1067-5509-01	GEAR 22T	2		
28AA	1139-5719-01	GEAR 16/16T	1		
29AA	1139-0250-01	AXLE PLATE	1		
30AA	1139-5729-01	SHAFT	1		
31AA	1139-5715-01	TRANSPORT COIL	1		
32AA	1067-5507-01	SHAFT	1		
33AA	1174-4230-01	SEPARATOR	2		
34AA	1139-4214-02	SHAFT	2		
35AA	1151-4218-01	BRACKET	1		
36AA	1139-4213-01	BRACKET	1		
*37AA	1139-5728-02	REGULATING PLATE	1	0751	
38AA	1139-5726-01	REGULATING PLATE	1		
39AA	1139-5702-08	DEVELOPING HOUSING	1		
40AA	1139-4219-01	LEVER	1		
41AA	1139-5720-01	SPONGE	2		
42AA	1139-5721-02	SPONGE	2		
43AA	1139-5723-01	PAD	1		
44AA	1174-5762-01	POLYESTER FILM	1		
45AA	1139-5725-01	SPONGE	1		
46AA	1151-6809-01	HARNESS	1		
47AA	1139-5730-01	GEAR 18T	1		
48AA	1139-5215-01	TERMINAL	1		
49AA	1139-5713-12	SHOULDER SCREW	1		
50AA	1139-5228-01	SET PLATE	1		
51AA	1139-5704-02	COVER FNT	1		
52AA	1139-5742-01	LABEL	1		
53AA	1129-7303-01	LABEL HIGH VOLTAGE	1		
54AA	1139-5219-01	SPONGE	1		
55AA	1139-5739-01	SEAL	1		
56AA	1139-5701-02	COVER	1		
57AA	1139-7361-01	LABEL DO NOT HOLD	1		
58AA	1174-0368-01	DRUM CHARGE CORONA	1		
*59AA	1174-0335-02	DEVELOPING UNIT	1	2710	
*59BA	1174-0336-02	DEVELOPING UNIT MINOLTA	1	2520	
*59CA	1174-0338-02	DEVELOPING UNIT MINOLTA	1	2542	
*59DA	1174-0336-02	DEVELOPING UNIT EUROPE	1	2812	
*59EA	1174-0338-02	DEVELOPING UNIT EXCEPT EUROPE	1	2812	

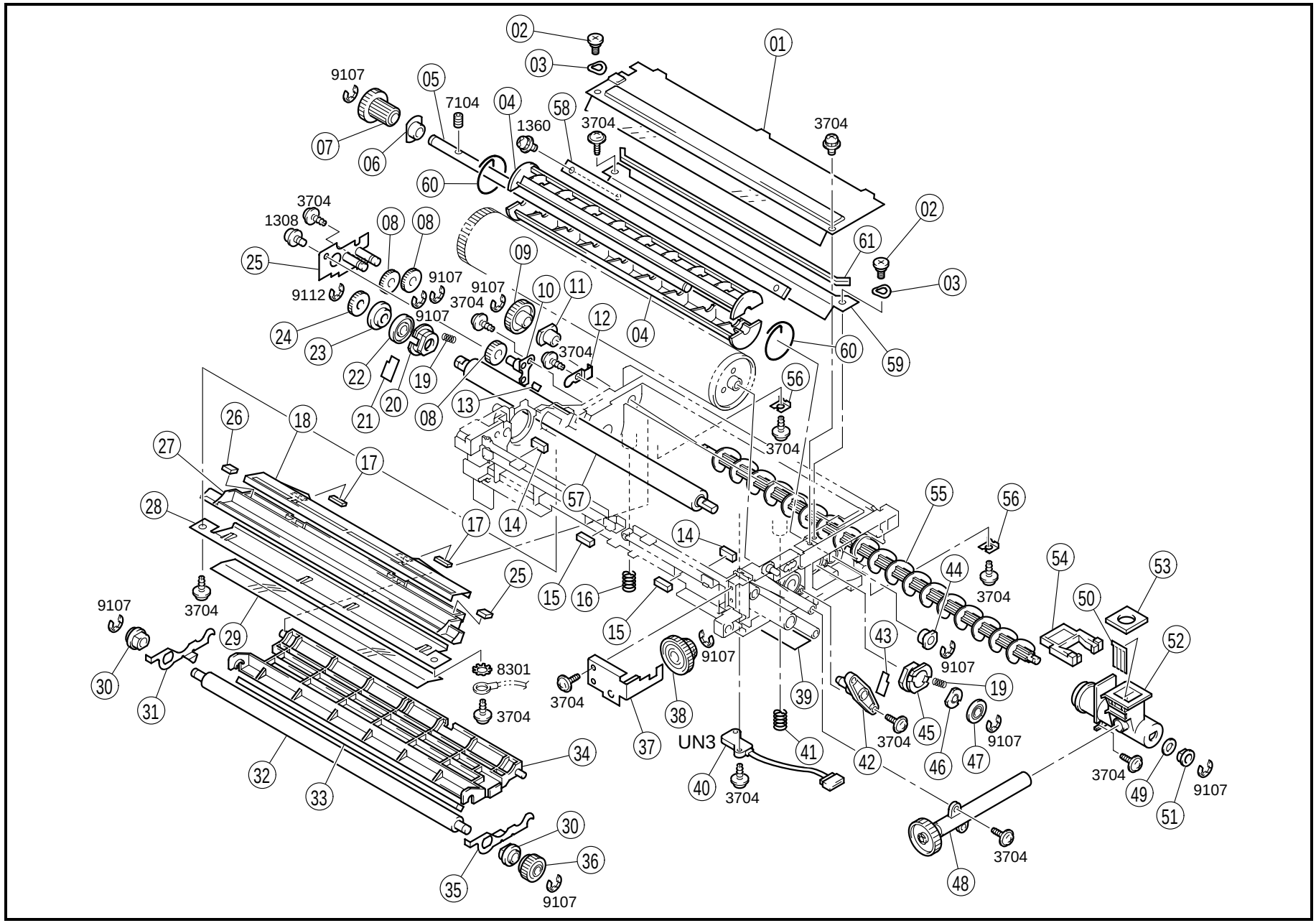
01
02
03
04
05
06
07
08
09
10
11
12
13
14
15
16
17
18
19
20
21
22
23
24
25
26
27
28
29
30
31
32
33
34
35
36
37
38
39
40
41
42
43
44
45
46
47
48
49
50
51
52
53
54
55
56
57
58
59
60
61
9107
7104
1360
3704
1308
9112
8301
UN3

INDEX	PART NO.	PART NAME	QTY	AREA	REMARKS
01AA	1174-5222-01	LID	1		
02AA	1139-5249-01	SHOULDER SCREW	2		
03AA	1139-5250-01	PLATE SPRING	2		
04AA	1151-5214-01	BUCKET ROLLER	2		
05AA	1151-5207-01	SHAFT	1		
06AA	1032-1606-02	BUSHING	1		
07AA	1139-5220-01	GEAR 23/24T	1		
08AA	1139-5221-01	GEAR 22T	3		
09AA	1139-5223-01	GEAR 30T	1		
10AA	1174-0254-01	BRACKET	1		
11AA	1139-5216-01	BUSHING	1		
12AA	1139-5231-01	SET PLATE	1		
13AA	1139-5256-01	POLYESTER FILM	1		
14AA	1139-5724-02	MAT	2		
15AA	1139-5725-01	SPONGE	2		
16AA	1139-3256-02	PRESSURE SPRING	1		
*17AA	1139-5255-01	SPONGE	2	0751	
*18AA	1139-5229-01	GROUND PLATE	1	0751	
19AA	1400-1226-03	PRESSURE SPRING	2		
20AA	1139-0753-01	BUSHING	1		
21AA	1139-5252-02	POLYESTER FILM	1		
22AA	1139-5246-01	BALL BEARING	1		
23AA	1174-5206-02	ROLL	1		
24AA	1174-5224-01	GEAR 20T	1		
25AA	1174-0203-01	PLATE	1		
*26AA	1139-5254-01	SPONGE	2	0751	
27AA	1139-5226-01	ANTISPILL PLATE	1		
28AA	1139-3257-01	GUIDE PLATE	1		
29AA	1139-3255-02	POLYESTER FILM	1		
30AA	1139-3261-01	BUSHING	2		
31AA	1139-3259-01	HOLDER-RR RR	1		
32AA	1151-3250-01	ROLLER	1		
33AA	1139-3253-01	CLEANING PAD	1		
34AA	1139-3252-03	GUIDE PLATE	1		
35AA	1139-3258-01	HOLDER-FNT FNT	1		
36AA	1151-3169-01	GEAR 12T	1		
37AA	1139-0251-12	BRACKET	1		
38AA	1139-5734-01	GEAR 18/30T	1		
*39AA	1139-5248-01	POLYESTER FILM	1	2797	
40AA	1136-6052-12	ATDC UNIT SENSOR (UN3)	1		
41AA	1151-3262-01	PRESSURE SPRING	1		
42AA	1139-5703-01	SUPPORT	1		
43AA	1139-5253-01	POLYESTER FILM	1		
44AA	1144-0168-01	BUSHING	1		
45AA	1139-0752-01	BUSHING	1		
46AA	1139-5240-01	BUSHING	1		
47AA	1174-5204-02	ROLL	1		
48AA	1151-0151-01	DUCT	1		
49AA	1174-5276-01	SEAL	1		
50AA	1174-5275-02	POLYESTER FILM	1		
51AA	1200-3211-08	BUSHING	1		
52AA	1139-5233-02	CONVEYOR DUCT	1		
53AA	1139-5235-01	SPONGE	1		
54AA	1139-5251-01	GUIDE	1		
55AA	1174-0656-01	CONVEYOR ROLLER	1		
56AA	1139-3260-01	PLATE	2		
57AA	1151-5218-01	MAGNET ROLLER	1		
58AA	1052-1603-01	REGULATING PLATE	1		
59AA	1139-5209-01	BRACKET	1		
60AA	1151-5271-01	RING	2		
61AA	1139-5225-02	SPONGE	1		

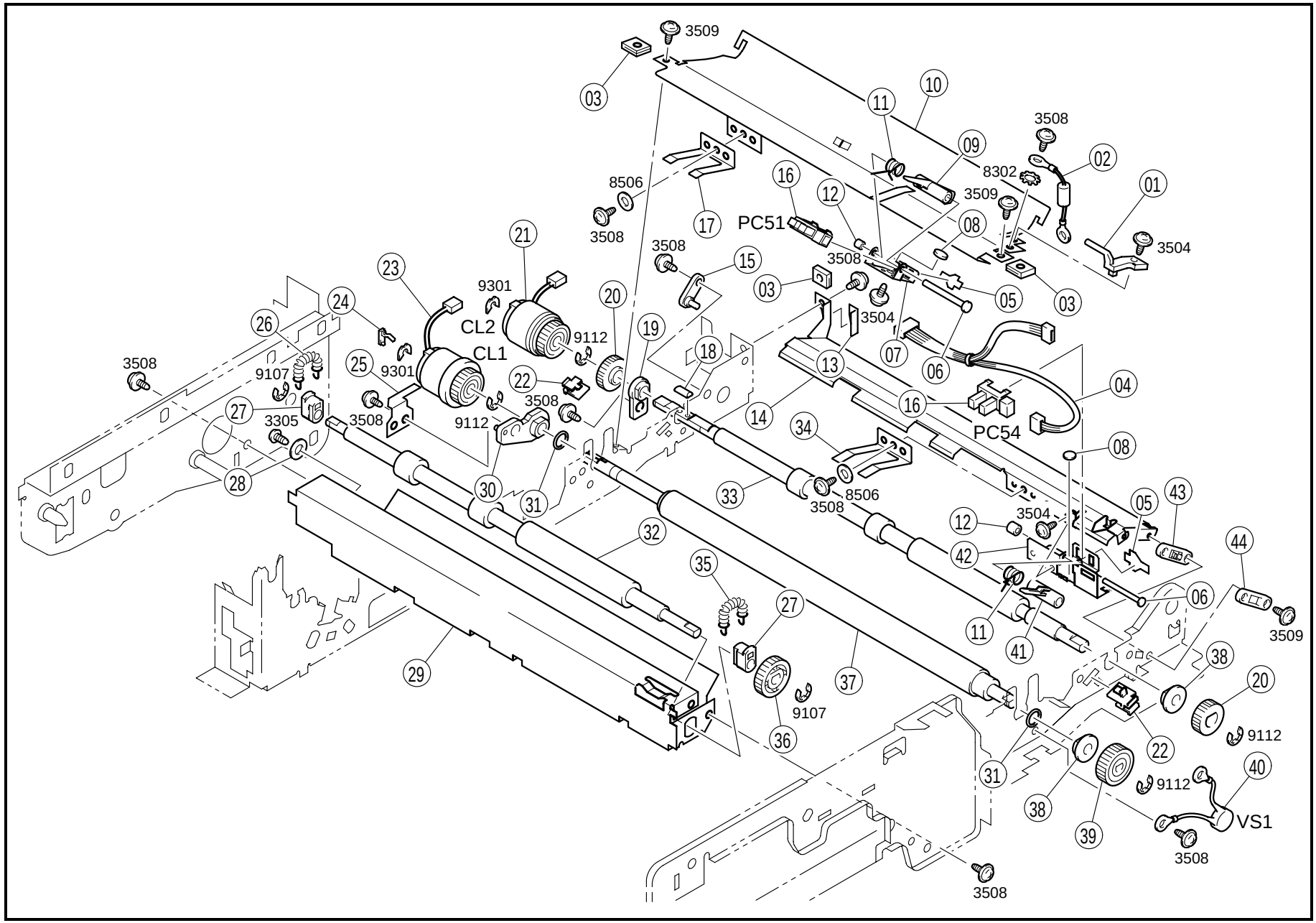
3509
03
10
11
09
3508
02
8302
01
3509
3504
8506
16
12
17
PC51
08
3508
3508
15
3508
03
05
03
21
23
9301
20
24
CL2
9112
19
3504
26
CL1
18
07
06
3508
9107
25
9301
22
13
04
27
3305
3508
9112
3508
14
16
PC54
34
08
28
30
31
33
8506
3508
05
43
12
3504
32
42
44
35
06
27
11
41
3509
29
37
38
20
9107
36
22
9112
31
40
9112
38
39
VS1
3508
3508

INDEX	PART NO.	PART NAME	QTY	AREA	REMARKS
01AA	1139-3143-01	LEVER	1		
02AA	1139-0405-01	RESISTOR	1		
03AA	1076-3109-01	GUIDE	3		
04AA	1139-6814-02	HARNESS	1		
05AA	1136-2131-03	STOPPER	2		
06AA	1200-5212-04	PIN	2		
07AA	1139-3129-01	BRACKET	1		
08AA	1139-3147-01	SPONGE	2		
09AA	1139-3127-01	ACTUATOR	1		
10AA	1139-3124-01	GUIDE PLATE	1		
11AA	1139-3167-01	TORSION SPRING	2		
12AA	1200-2105-05	COLLAR	2		
13AA	1151-3179-01	SEAL	1		
14AA	1151-3121-01	GUIDE PLATE	1		
15AA	1151-3177-01	SPACER	1		
16AA	9335-1310-31	PHOTO INTERRUPTER (PC51,PC54)	2		
17AA	1139-4074-01	PLATE SPRING	1		
18AA	1149-3116-01	SPACER	1		
19AA	1151-3192-01	BUSHING	1		
20AA	1151-3114-01	GEAR 16T	2		
21AA	9322-1610-21	CLUTCH TRANSFER (CL2)	1		
22AA	1139-3123-01	SPACER	2		
23AA	9322-1610-11	CLUTCH SYNC (CL1)	1		
24AA	1149-3117-01	SPACER	1		
25AA	1151-3251-01	GROUND PLATE	1		
26AA	1139-3118-01	TENSION SPRING	1		
27AA	1139-3102-01	BUSHING	2		
28AA	1200-1422-02	WASHER	1		
29AA	1173-3119-01	GUIDE	1		
30AA	1151-3191-01	BUSHING	1		
*31AA	1145-3208-01	RETAINING RING	2	2706	
32AA	1139-3115-01	ROLLER	1		
33AA	1151-3112-02	ROLLER	1		
34AA	1151-3176-01	PLATE SPRING	1		
35AA	1273-3505-01	TENSION SPRING	1		
36AA	1139-3117-01	GEAR 18T	1		
37AA	1151-3122-02	ROLLER	1		
38AA	1200-3231-05	BUSHING	2		
39AA	1151-3168-01	GEAR 20T	1		
40AA	1139-0420-01	VARISTOR GUIDE (VS1)	1		
41AA	1139-3126-01	ACTUATOR	1		
42AA	1139-3132-01	BRACKET	1		

INDEX	PART NO.	PART NAME	QTY	AREA	REMARKS
43AA	1136-3537-01	SPACER	1		
44AA	1136-3538-01	SPACER	1		

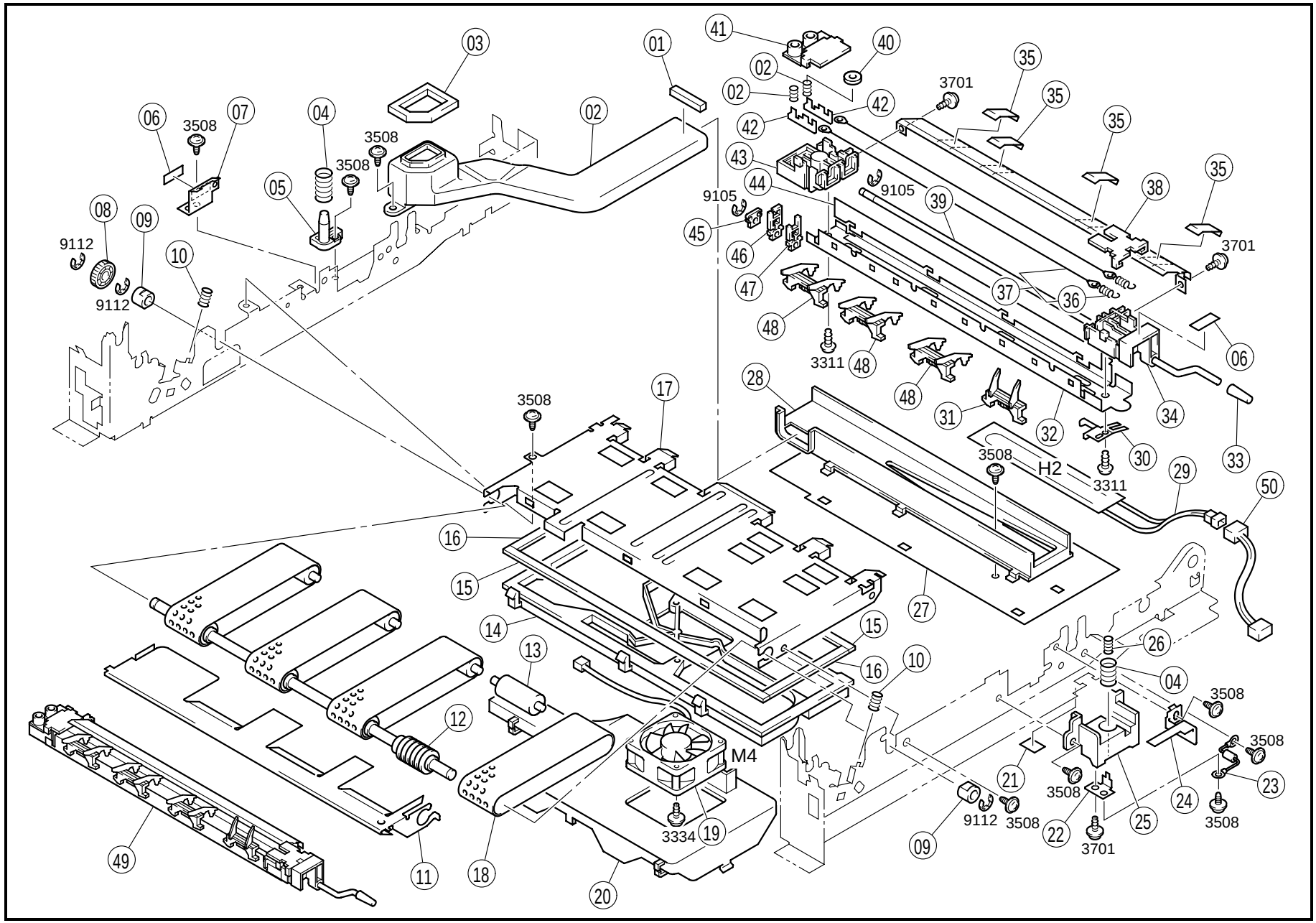
01
02
03
04
05
06
07
08
09
10
11
12
13
14
15
16
17
18
19
20
21
22
23
24
25
26
27
28
29
30
31
32
33
34
35
36
37
38
39
40
41
42
43
44
45
46
47
48
49
50
3508
3701
3311
3334
9105
9112
H2
M4

INDEX	PART NO.	PART NAME	QTY	AREA	REMARKS
01AA	1139-4513-01	SPONGE	1		
02AA	1139-4502-01	DUCT	1		
03AA	1139-4507-01	SPONGE	1		
04AA	1400-1167-05	PRESSURE SPRING	2		
05AA	1139-4072-01	AXLE PLATE RR	1		
06AA	1129-7303-01	LABEL HIGH VOLTAGE	2		
07AA	1151-4273-01	STOPPER	1		
08AA	1139-2509-01	GEAR 21T	1		
09AA	1079-5530-01	BUSHING	2		
10AA	1139-5548-01	PRESSURE SPRING	2		
11AA	1151-5502-01	GUIDE PLATE	1		
12AA	1151-3503-01	ROLLER	1		
13AA	1151-3506-01	ROLL	4		
14AA	1151-3502-01	DUCT	1		
15AA	1151-3511-01	SPONGE	2		
16AA	1151-3512-01	SPONGE	2		
17AA	1151-3501-01	FRAME	1		
18AA	1151-3505-01	VACUUM BELT	1SET		
19AA	9313-1610-11	FAN MOTOR SUCTION (M4)	1		
20AA	1151-3510-02	DUCT	1		
21AA	1174-2386-01	POLYESTER FILM	1		
22AA	1139-4073-01	TERMINAL	1		
23AA	1151-0132-02	RESISTER	1		
24AA	1139-4075-01	HOLD PLATE	1		
25AA	1139-4071-02	HOLDER FNT	1		
26AA	1400-1122-04	PRESSURE SPRING	2		
27AA	1139-4510-01	BRACKET	1		
28AA	1139-4503-01	DUCT	1		
*29AA	9352-6610-11	HEATER OPTION (H2)	1	2517	
30AA	1139-4064-01	PLATE SPRING	1		
31AA	1139-4068-01	GUIDE	1		
32AA	1139-4056-01	HOUSING	1		
33AA	1139-4069-01	CAP	1		
34AA	1151-4051-03	HOLDER FNT	1		
35AA	1139-4077-01	SEAL	4		
36AA	1400-2110-01	TENSION SPRING	2		
37AA	1139-0756-01	CORONA WIRE	2		
38AA	1139-4053-02	COVER	1		
39AA	1139-4066-01	SHAFT	1		
*40AA	9326-1310-61	FERRITE CORE	1	0412	
41AA	1151-4054-01	COVER RR	1		
42AA	1139-4057-01	TERMINAL	2		
43AA	1151-4052-03	HOLDER RR	1		
44AA	1139-0755-01	GUIDE	1		
45AA	1139-4065-01	SUPPORT	1		
46AA	1151-4058-02	CLEANING PAD RT	1		
47AA	1151-4059-02	CLEANING PAD LFT	1		
48AA	1139-4067-01	GUIDE	3		
*49AA	1174-0359-01	TRANS/SEP CORONA MINOLTA	1	2314	
*49BA	1174-0367-01	TRANS/SEP CORONA MINOLTA	1	0412	
*49CA	1174-0359-01	TRANS/SEP CORONA EXCEPT EUROPE	1	2812	
*49DA	1174-0367-01	TRANS/SEP CORONA EUROPE	1	2812	
*50AA	1174-6850-01	HARNESS OPTION (H2)	1	2517	

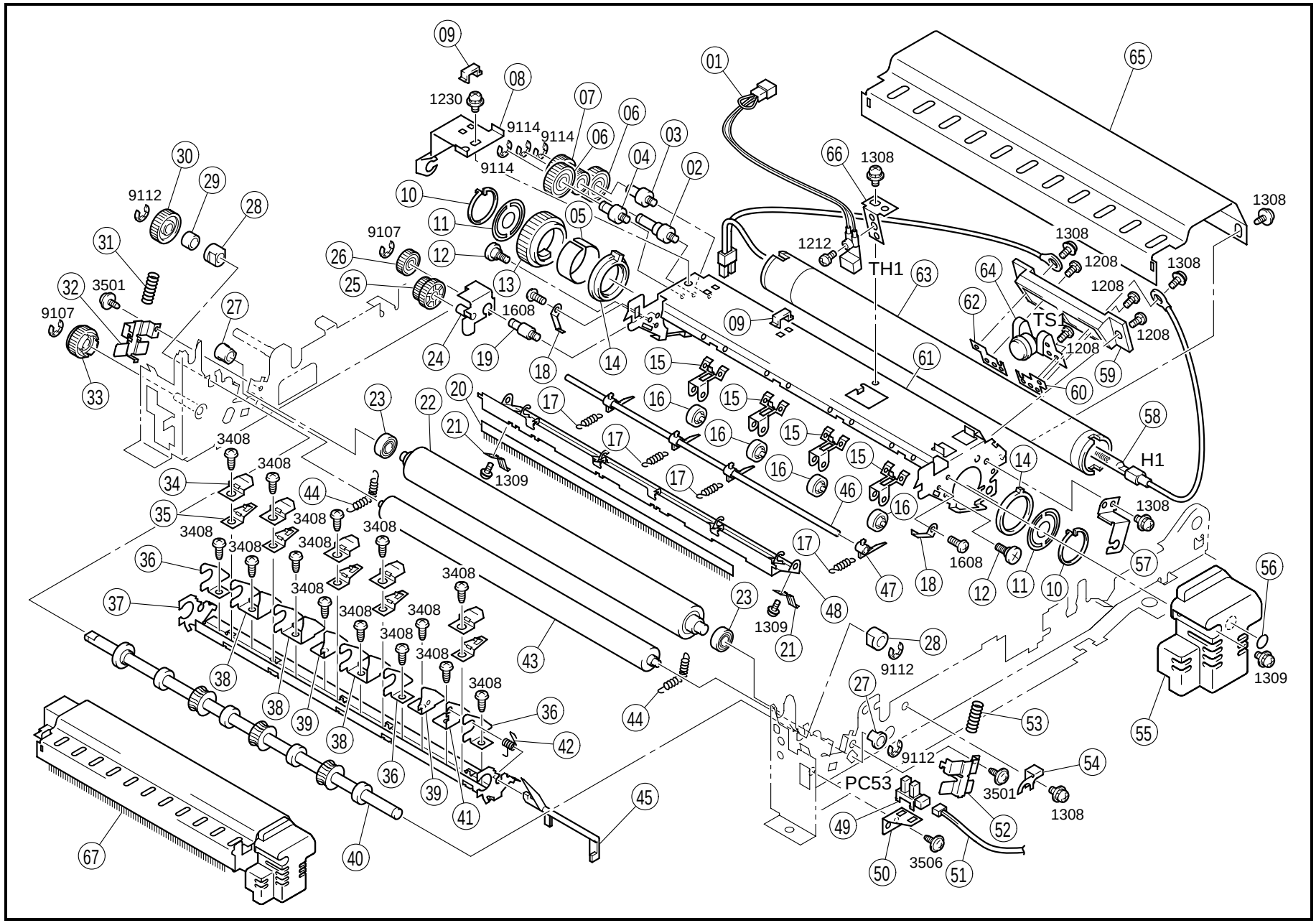
09
08
1230
9114
9114
9114
07
06
06
03
04
02
01
65
66
1308
1308
1308
1208
1208
1208
1208
1308
1212
TH1
63
64
62
TS1
59
60
61
58
H1
1308
57
56
1309
55
30
29
28
9112
31
32
3501
9107
33
27
10
11
12
05
9107
26
25
13
1608
24
19
18
14
15
16
15
16
15
16
15
16
17
17
17
17
23
22
20
21
1309
23
1309
21
48
47
46
18
1608
12
11
10
28
9112
27
9112
53
54
3501
1308
52
3506
51
50
49
PC53
45
44
43
44
42
41
40
67
3408
34
35
36
37
38
39
44

INDEX	PART NO.	PART NAME	QTY	AREA	REMARKS
01AA	9372-2610-11	THERMISTOR FUSING (TH1)	1		
02AA	1151-5604-02	SHOULDER SCREW	1		
03AA	1151-5603-01	SHOULDER SCREW	1		
04AA	1151-5605-01	SHOULDER SCREW	1		
05AA	1174-5602-01	COLLAR	1		
06AA	1151-5612-01	GEAR 24T	2		
07AA	1151-5606-02	GEAR 15/19T	1		
08AA	1151-5506-01	SUPPORT PLATE RR	1		
09AA	1139-5558-01	CORD CLAMP	9		
10AA	0993-5529-01	C-RING	2		
11AA	1151-5611-01	LID	2		
12AA	1100-1340-05	SHOULDER SCREW	2		
13AA	1151-5532-02	GEAR 38T	1		
14AA	1151-5610-02	BUSHING	2		
15AA	1136-5806-01	HOLDER	4		
16AA	1136-5805-02	ROLL	4		
17AA	1065-5857-01	TENSION SPRING	4		
18AA	1139-5538-01	PLATE SPRING	2		
19AA	1139-5554-01	PIN	1		
20AA	1174-5574-01	NEUTRALIZING BRUSH	1		
21AA	1139-5546-01	PLATE SPRING	2		
22AA	1174-5522-01	FUSING ROLLER-LWR LWR	1		
23AA	1065-5871-01	BALL BEARING	2		
24AA	1139-0249-01	BRACKET	1		
25AA	1139-5552-02	GEAR 15/20T	1		
26AA	1151-5534-01	GEAR 18T	1		
27AA	1139-5561-01	BUSHING	2		
28AA	1200-3134-16	BUSHING	2		
29AA	1139-5544-01	COLLAR	1		
30AA	1300-3132-12	GEAR 24T	1		
31AA	1151-5553-01	PRESSURE SPRING RR	1		
32AA	1151-5601-01	HOLDER RR	1		
33AA	1139-2022-01	GEAR 22T	1		
34AA	1054-3773-01	REINFORCE PLATE	5		
35AA	1054-3765-13	PLATE SPRING	5		
36AA	1149-5621-01	GUIDE	3		
37AA	1149-5504-01	GUIDE PLATE	1		
38AA	1149-5622-01	GUIDE	3		
39AA	1149-5623-01	GUIDE	2		
40AA	1151-5523-01	ROLLER	1		
41AA	1139-5514-02	BRACKET	1		
42AA	1139-5543-01	TORSION SPRING	1		
43AA	1174-5609-01	ROLLER	1		
44AA	1139-5560-01	TENSION SPRING	2		
45AA	1139-5542-01	LEVER	1		
46AA	1139-5549-01	SHAFT	1		
47AA	1054-4753-01	SEPARATOR	4		
48AA	1151-5503-02	GUIDE PLATE	1		
49AA	9335-1310-31	PHOTO INTERRUPTER EXIT (PC53)	1		
50AA	1151-5510-01	BRACKET	1		
51AA	1139-6816-02	HARNESS	1		
52AA	1151-5513-01	HOLDER	1		
53AA	1151-5539-01	PRESSURE SPRING FNT	1		
54AA	1139-5509-02	SUPPORT	1		
55AA	1146-5535-01	COVER	1		
56AA	1080-7014-01	LABEL M1	1		
57AA	1151-5507-01	SUPPORT PLATE FNT	1		
*58AA	9352-2610-21	TUBE LAMP FUSING (H1)	1	2505	
*58BA	9352-2610-31	TUBE LAMP FUSING (H1)	1	2612	
59AA	1136-5753-01	HOLDER	1		
60AA	1012-5586-01	TERMINAL	1		
61AA	1151-5501-02	FRAME	1		
62AA	1012-5587-01	TERMINAL	1		
63AA	1174-5521-01	FUSING ROLLER-UPR UPR	1		
64AA	9334-1610-11	THERMOSTAT FUSING (TS1)	1		
65AA	1174-5505-01	COVER	1		
66AA	1151-5608-01	BARCKET	1		
*67AA	1174-0345-02	FUSING UNIT	1	2505	
*67BA	1174-0346-02	FUSING UNIT	1	2612	

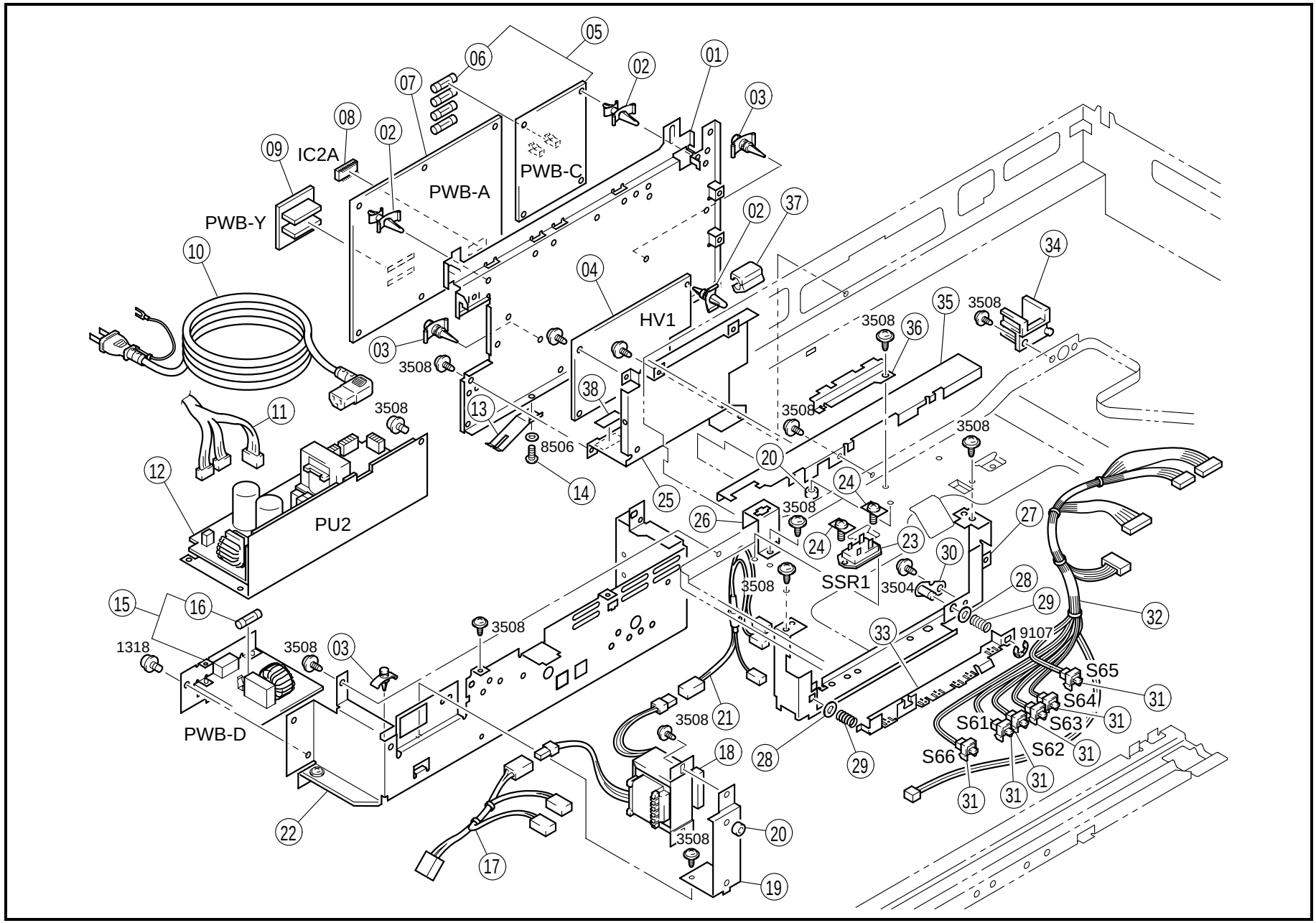
PWB-A
PWB-C
PWB-Y
IC2A
HV1
PU2
PWB-D
SSR1
S61
S62
S63
S64
S65
S66
3508
8506
3504
1318
9107

INDEX	PART NO.	PART NAME			QTY	AREA	REMARKS
01AA	1151-2306-02	BRACKET			1		
02AA	9384-1900-56	PWB SUPPORT 6.35H			13		
03AA	9384-1900-61	PWB SUPPORT 6.35H			4		
*04AA	9325-1610-12	PWB-HV		(HV1)	1	0751	
*04BA	9325-1610-22	PWB-HV		(HV1)	1	2797	
05AA	1174-0103-01	PW BOARD-C		(PWB-C)	1		
06AA	9346-3720-21	FUSE 3A			4		
07AA	1176-0101-04	PW BOARD-A		(PWB-A)	1		
08AA	1176-6601-02	IC			1		
09AA	1138-0115-03	PW BOARD-Y		(PWB-Y)	1		
*10AA	9381-4610-31	POWER CORD			1	2505	
*10BA	9381-4310-81	POWER CORD	MINOLTA		1	2638	
*10CA	9381-4310-51	POWER CORD	220-240V		1	2793	
*10DA	9381-4310-81	POWER CORD	220-240V		1	2812	
*11AA	1176-6803-01	HARNESS			1	0703	
*11BA	1176-6835-02	HARNESS			1	2706	
*12AA	9325-2610-51	PWB-PU		(PU2)	1	2505	
*12BA	9325-2610-21	PWB-PU		(PU2)	1	2612	
13AA	1149-2356-01	PLATE SPRING			1		
14AA	1151-3300-01	TAPPING SCREW			1		
*15AA	1174-0104-01	PW BOARD-D		(PWB-D)	1	2521	
*15BA	1174-0105-01	PW BOARD-D		(PWB-D)	1	2612	
*15CA	1174-0114-01	PW BOARD-D		(PWB-D)	1	2500	
*16AA	9346-3720-51	FUSE 15A			1	2505	
*16BA	9346-3610-31	FUSE 8A			1	2612	
*17AA	1174-6845-01	HARNESS	OPTION		1	2517	
*18AA	9324-1810-51	TRANSFORMER	OPTION		1	2504	
*18BA	9324-1810-61	TRANSFORMER	OPTION		1	2612	
*19AA	1175-2384-01	BRACKET	OPTION		1	2517	
20AA	1174-2388-01	SPACER	OPTION		2		
*21AA	1174-6847-01	HARNESS	OPTION		1	2517	
22AA	1151-2310-02	MOUNTING PLATE			1		
23AA	9343-4210-21	TRIAC MODULE	FUSING	(SSR1)	1		
24AA	1139-2338-01	TAPPING SCREW			2		
25AA	1151-2317-01	BRACKET			1		
26AA	1151-2368-01	STOP PLATE			1		
27AA	1139-3050-01	BRACKET			1		
28AA	1200-1346-12	WASHER			2		
29AA	1273-3048-01	PRESSURE SPRING			2		
30AA	1065-3090-01	BRACKET			1		
31AA	9332-1310-11	DETECTING SWITCH		(S61-S66)	6		
32AA	1174-6807-01	HARNESS			1		

INDEX	PART NO.	PART NAME	QTY	AREA	REMARKS
33AA	1139-3049-01	BRACKET	1		
34AA	1151-2360-01	EDGE COVER	1		
35AA	1151-2371-02	COVER	1		
36AA	1174-2354-01	GUIDE	1		
*37AA	9326-1410-31	FERRITE CORE	1	0412	
38AA	1129-7303-01	LABEL HIGH VOLTAGE	1		

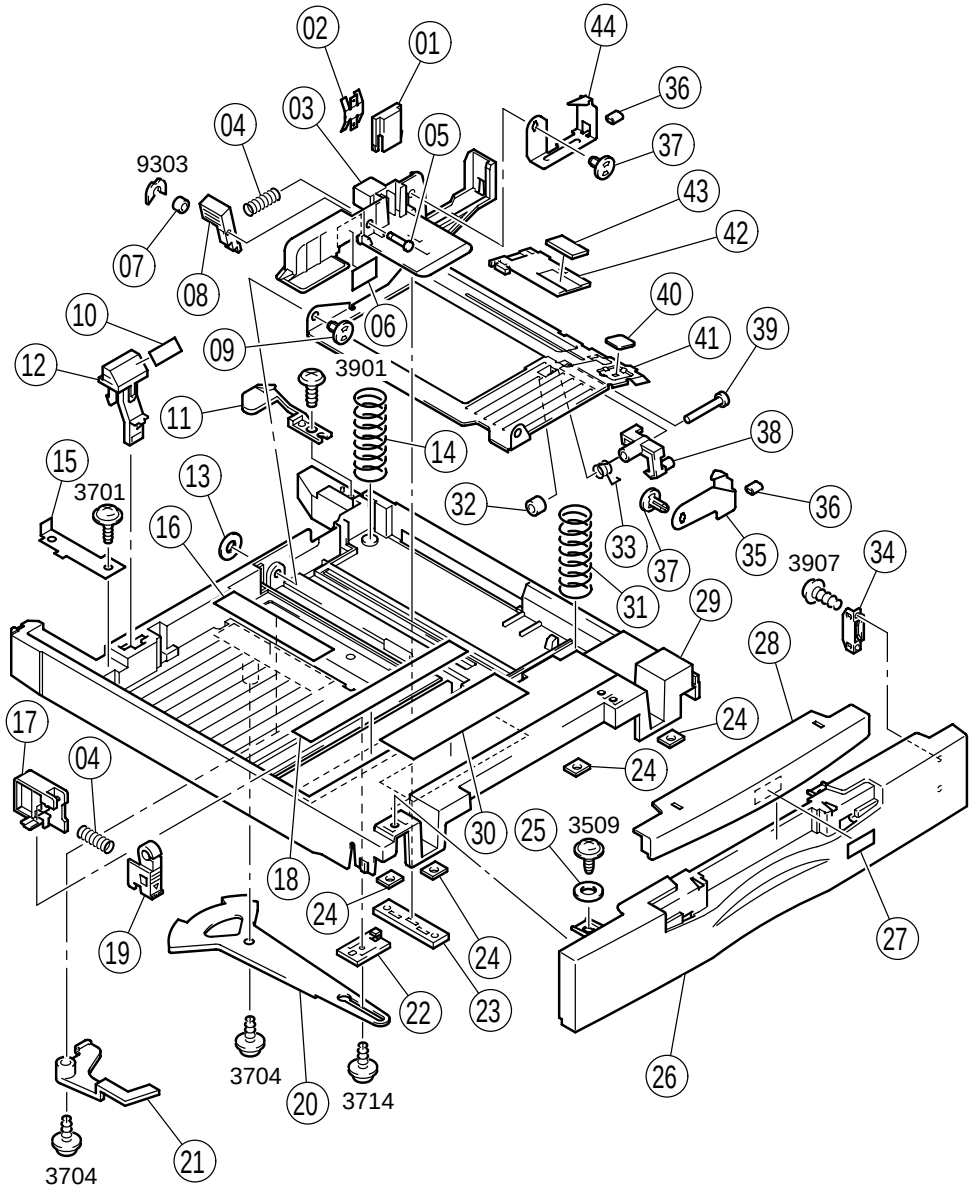
02
01
44
36
03
04
05
37
9303
43
42
07
08
06
40
10
09
41
39
12
3901
11
14
38
15
3701
13
32
36
16
33
37
35
3907
34
31
29
28
17
24
04
24
30
25
3509
18
24
24
27
19
22
23
3704
20
3714
26
3704
21

INDEX	PART NO.	PART NAME	QTY	AREA	REMARKS
01AA	1139-3019-01	GUIDE	1		
02AA	1139-3020-02	PLATE SPRING	1		
03AA	1139-3012-02	GUIDE PLATE	1		
04AA	1139-3014-02	PRESSURE SPRING	2		
05AA	1139-3045-02	SHAFT	1		
06AA	1151-7308-01	LABEL MAX	1		
07AA	1200-2226-22	COLLAR	1		
08AA	1139-3013-02	LEVER	1		
09AA	1139-3039-02	PIN	1		
10AA	1151-7383-01	LABEL	1		
11AA	1139-3077-03	STOPPER	1		
12AA	1151-3170-02	LEVER	1		
13AA	1200-1342-02	WASHER	1		
14AA	1139-3031-02	PRESSURE SPRING	1		
15AA	1139-3082-01	SUPPORT PLATE	1		
16AA	1151-7382-13	LABEL WIDTH SCALE	1		
17AA	1139-3016-01	STOPPER	1		
18AA	1151-7381-13	LABEL LENGTH SCALE	1		
19AA	1139-3017-01	LOCK LEVER	1		
20AA	1139-3040-12	LEVER	1		
21AA	1142-3042-01	LEVER	1		
22AA	1139-3018-01	SPACER	1		
23AA	1139-3071-01	SLIDER	1		
24AA	1139-3153-01	PLATE NUT	4		
25AA	1174-3196-01	WASHER	4		
26AA	1174-3022-02	COVER	1		
*27AA	1175-7307-01	LABEL PAPER SIZE	1	0800	
*27BA	1174-7334-01	LABEL UNIVERSAL	1	2812	
*28AA	1174-3151-02	COVER	1	0800	
*28BA	1174-3161-02	COVER	1	2812	
29AA	1139-3181-01	CASSETTE BODY	1		
30AA	1151-7322-12	LABEL PAPER LOADING	1		
31AA	1139-3030-01	PRESSURE SPRING	1		
32AA	1200-2105-02	COLLAR	1		
33AA	1139-3089-01	TORSION SPRING	1		
34AA	1273-3535-01	MAGNET CATCH	1		
35AA	1139-3037-01	PAWL FNT	1		
36AA	1200-2125-01	RETAINING RING	2		
37AA	1139-3035-01	PIN	2		
38AA	1139-3034-02	LOCK LEVER	1		
39AA	1200-5232-10	SHAFT	1		
40AA	1139-3032-01	FRICTION PLATE	1		
41AA	1139-3026-02	LIFTING PLATE	1		
42AA	1139-3027-02	SLIDE PLATE	1		
43AA	1139-3033-01	FRICTION PLATE	1		
44AA	1139-3038-01	PAWL RR	1		

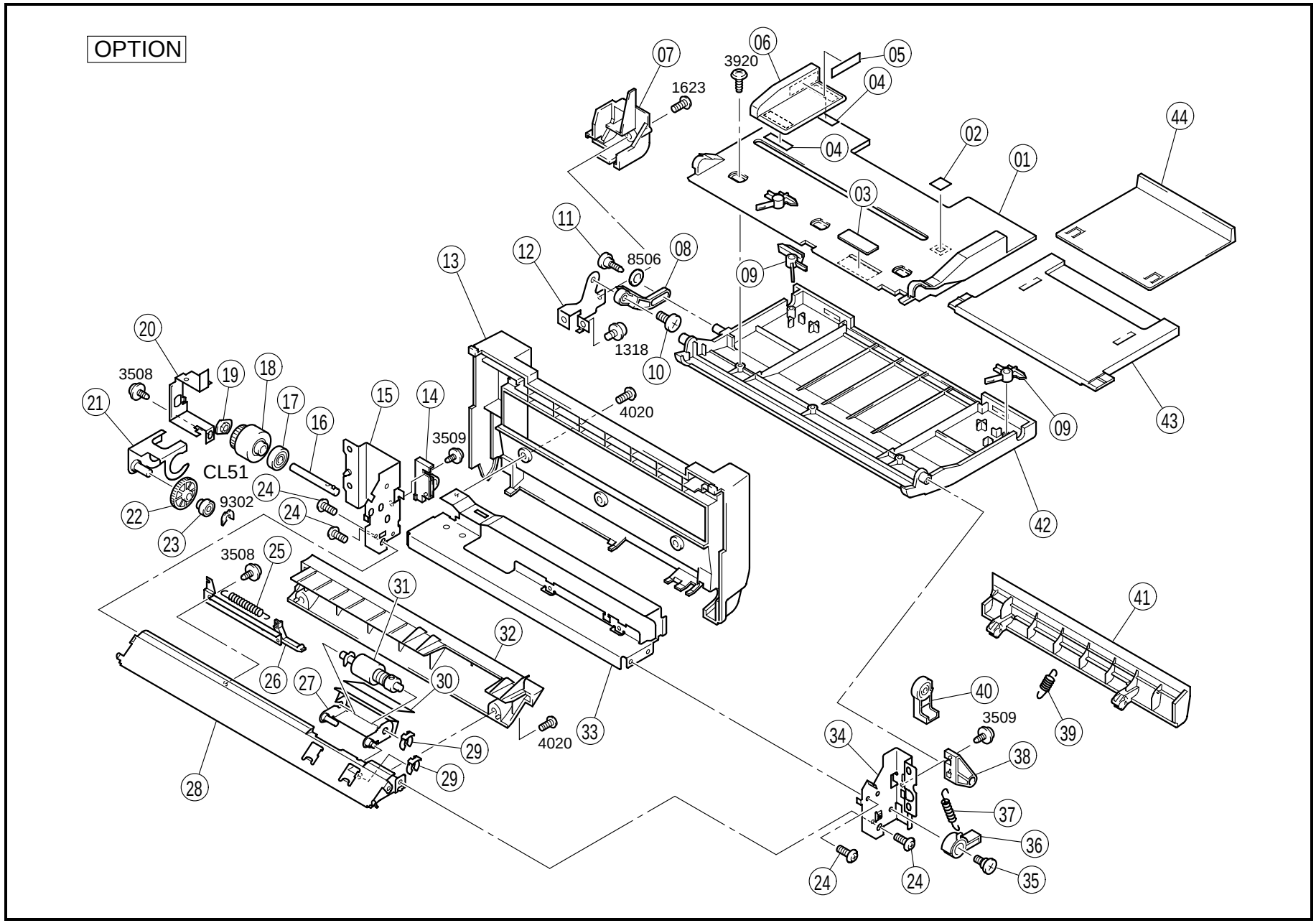
OPTION
07
1623
3920
06
05
04
04
02
01
44
03
11
12
8506
08
09
13
1318
10
20
3508
19
18
17
16
15
14
4020
3509
21
CL51
24
9302
22
24
23
3508
25
31
32
26
27
30
33
4020
29
29
28
09
43
42
41
40
3509
39
34
38
37
36
35
24
24

INDEX	PART NO.	PART NAME	QTY	AREA	REMARKS	INDEX	PART NO.	PART NAME	QTY	AREA	REMARKS
01AA	1139-3327-13	TABLE	1			43AA	1139-3329-01	HOLDER	1		
02AA	4425-1059-12	SEAL	1			44AA	1139-3358-01	GUIDE	1		
03AA	1052-5409-01	CORK	1								
04AA	0704-5401-01	SEAL	2								
05AA	1139-7360-01	LABEL MAX	1								
06AA	1139-3330-01	GUIDE	1								
07AA	1139-3380-03	COVER	1								
08AA	1139-3378-01	GUIDE LEVER	1								
09AA	1139-3376-03	LOCK LEVER	2								
10AA	1100-1340-05	SHOULDER SCREW	1								
11AA	1100-1330-05	SHOULDER SCREW	1								
12AA	1139-3377-01	BRACKET	1								
13AA	1174-3305-01	COVER	1								
14AA	1139-3333-03	HINGE	1								
15AA	1139-0237-03	REAR FRAME	1								
16AA	1139-3339-01	SHAFT	1								
17AA	1139-3353-01	BUSHING	1								
18AA	9322-1610-31	CLUTCH TAKE-UP (CL51)	1								
19AA	1139-3361-01	BUSHING	1								
20AA	1139-3340-01	BRACKET	1								
21AA	1139-0244-01	BRACKET	1								
22AA	1151-3310-01	GEAR 22T	1								
23AA	1139-3362-01	COLLAR	1								
24AA	1151-3300-01	TAPPING SCREW	4								
25AA	1139-3315-02	TENSION SPRING	1								
26AA	1139-0246-01	BRACKET	1								
27AA	1139-3314-12	HOLDER	1								
28AA	1173-3304-01	GUIDE	1								
29AA	1033-4402-01	STOPPER RING	2								
30AA	1139-3374-01	POLYESTER FILM	1								
31AA	1139-0166-02	ROLLER	1								
32AA	1139-3342-12	GUIDE	1								
33AA	1139-3303-14	BRACKET	1								
34AA	1139-3301-03	FRONT FRAME	1								
35AA	1139-3365-01	SHOULDER SCREW	1								
36AA	1139-3341-01	STOPPER	1								
37AA	1139-3366-01	TENSION SPRING	1								
38AA	1139-3332-03	HINGE	1								
39AA	1139-3382-01	TENSION SPRING	1								
40AA	1139-3344-01	GUIDE	1								
41AA	1139-3381-02	COVER	1								
42AA	1139-3328-16	COVER	1								

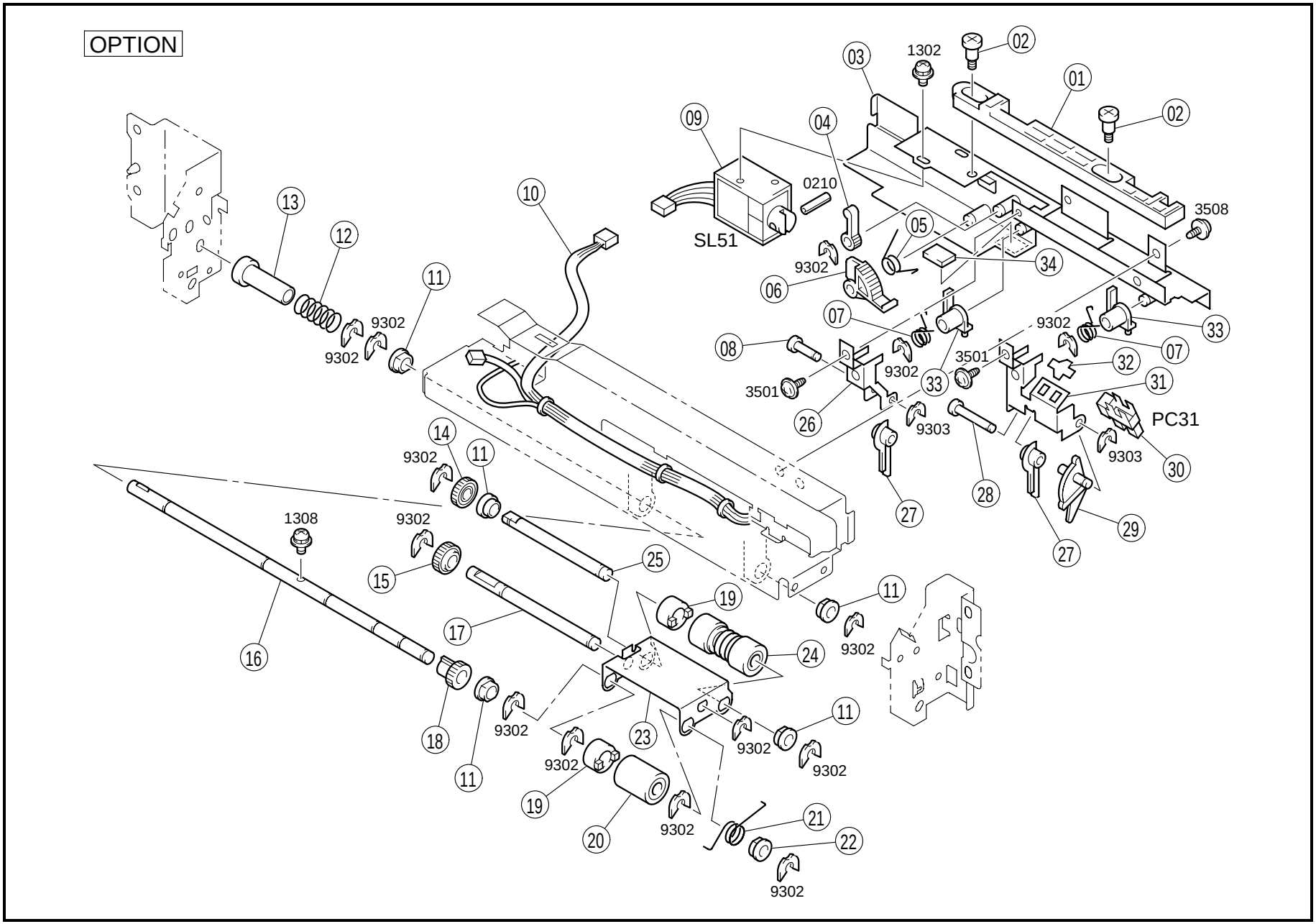
OPTION
SL51
PC31
0210
1302
3508
3501
1308
9302
9303
01
02
03
04
05
06
07
08
09
10
11
12
13
14
15
16
17
18
19
20
21
22
23
24
25
26
27
28
29
30
31
32
33
34

INDEX	PART NO.	PART NAME	QTY	AREA	REMARKS	INDEX	PART NO.	PART NAME	QTY	AREA	REMARKS
01AA	1139-3351-02	LEVER	1								
02AA	1100-1332-14	SHOULDER SCREW	2								
03AA	1151-0218-01	BRACKET	1								
04AA	1139-3370-01	GEAR 14T	1								
05AA	1139-3346-02	TORSION SPRING	1								
06AA	1139-3348-02	SEGMENT GEAR	1								
07AA	1139-3369-01	TORSION SPRING	2								
08AA	1139-3368-01	SHAFT	1								
09AA	9321-2310-41	SOLENOID PICK-UP (SL51)	1								
10AA	4425-6826-01	HARNESS	1								
11AA	1200-3221-07	BUSHING	5								
12AA	1070-3072-01	PRESSURE SPRING	1								
13AA	1052-4412-01	JOINT	1								
14AA	1139-3367-01	GEAR 19T	1								
15AA	1139-3318-01	GEAR 22T	1								
16AA	1139-3307-01	SHAFT	1								
17AA	1139-3373-02	SHAFT	1								
18AA	1139-3354-01	GEAR 17T	1								
19AA	1156-3073-01	ARBOR	2								
20AA	1052-5224-01	ROLLER	1								
21AA	1139-3320-01	TORSION SPRING	1								
22AA	1065-3086-01	BUSHING	1								
23AA	1139-3309-01	HOLDER	1								
24AA	1139-3316-01	ROLLER	1								
25AA	1139-3317-01	SHAFT	1								
26AA	1139-3372-01	HOLDER	1								
27AA	1139-3321-01	STOPPER	2								
28AA	1139-3364-01	SHAFT	1								
29AA	1139-3326-13	ACTUATOR	1								
30AA	9335-1310-31	PHOTO INTERRUPTER EMPTY (PC31)	1								
31AA	1139-3371-14	HOLDER	1								
32AA	1136-2131-03	STOPPER	1								
33AA	1139-3322-01	PAWL	2								
34AA	1139-3349-01	RUBBER STRIP	1								

01 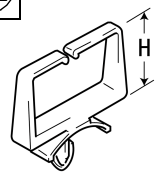	06 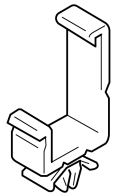	11 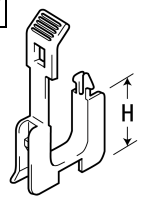	16 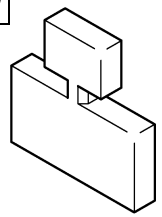				
02 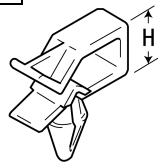	07 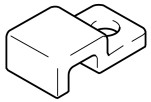	12 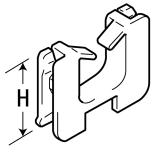					
03 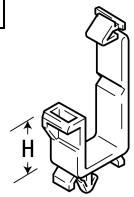	08 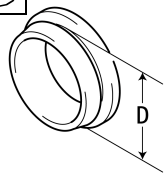	13 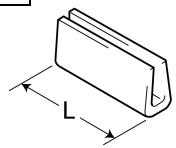					
04 	09 	14 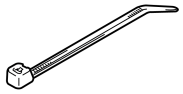					
05 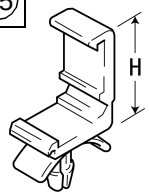	10 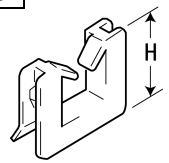	15 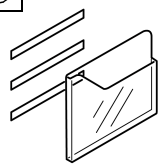					

INDEX	PART NO.	PART NAME	QTY	AREA	REMARKS	INDEX	PART NO.	PART NAME	QTY	AREA	REMARKS
01AA	9384-1310-81	WIRING SADDLE 6.4H	19								
02AA	9384-1820-31	WIRING SADDLE 8.0H	2								
03AA	9384-1921-21	WIRING SADDLE 36.1H	2								
03BA	9384-1921-31	WIRING SADDLE 17.3H	3								
04AA	9384-1110-61	WIRING SADDLE 21.5H	9								
04BA	9384-1211-01	WIRING SADDLE 19.2H	5								
05AA	9384-1900-53	WIRING SADDLE 18.7H	1								
05BA	9384-1310-91	WIRING SADDLE 18.5H	12								
06AA	9384-1311-01	WIRING SADDLE 27H	43								
07AA	1021-4707-01	CORD CLAMP	1								
08AA	0722-4913-01	COLLAR 20D	3								
09AA	1031-4403-01	GROMMET	1								
10AA	9384-2010-21	EDGE COVER 8.5H	13								
10BA	9384-2800-36	EDGE COVER 15H	4								
11AA	9384-2010-31	EDGE COVER 15.4H	2								
12AA	9384-2610-11	EDGE COVER 8.5H	2								
13AA	1156-2019-01	EDGE COVER 16L	1								
13BA	1174-2387-01	EDGE COVER 11L	1								
14AA	9384-1311-11	CABLE TIE 104L	1								
15AA	1151-0499-01	HOLDER(B5)	1								
16AA	1174-7901-01	JIG INTERLOCK	1								

INDEX	PART NO.	PART NAME	ILLUST
0210	9754-3012-08	SPRING ROLL PIN	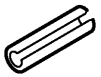
0509	9752-2012-50	PIN	
1208 1210 1212 1230 1266	9644-0306-13 9644-0308-13 9644-0310-13 9644-0408-13 9644-0204-07	SCREW	
1302 1308 1309 1312 1318 1321 1360	9646-0305-13 9646-0308-13 9646-0310-13 9646-0316-13 9646-0408-13 9646-0412-13 9646-0306-21	SCREW	
1415	9648-0408-13	SCREW	
1608 1623 1645	9654-0308-01 9654-0408-01 9654-0312-01	SCREW	
2705	9654-0325-01	SCREW	
3104 3110 3122	9656-0308-13 9656-0410-13 9656-0314-13	TAPPING SCREW	

INDEX	PART NO.	PART NAME	ILLUST
3211	9657-0314-07	TAPPING SCREW	
3305 3311 3334	9732-0308-13 9732-0408-13 9732-0434-13	TAPPING SCREW	
3402 3403 3408 3410 3412	9733-0306-13 9733-0308-13 9733-0406-13 9733-0408-13 9733-0412-13	TAPPING SCREW	
3501 3504 3506 3508 3509 3510 3517 3519 3525	9735-0306-13 9735-0308-13 9735-0406-13 9735-0408-13 9735-0410-13 9735-0412-13 9735-0305-13 9735-0312-13 9735-0420-13	TAPPING SCREW	
3701 3702 3703 3704 3705 3709 3714 3728	9739-0408-13 9739-0410-13 9739-0412-13 9739-0308-13 9739-0306-13 9739-0310-13 9739-0312-13 9739-0416-13	TAPPING SCREW	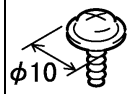
3901 3907 3920	9742-0412-13 9742-0308-13 9742-0408-14	TAPPING SCREW	

INDEX	PART NO.	PART NAME	ILLUST
4005 4009 4020 4021	9743-0408-13 9743-0308-01 9743-0408-14 9743-0308-14	TAPPING SCREW	
4305	9770-0408-13	TAPPING SCREW	
7104 7107 7114 7124	9684-0308-08 9684-0406-08 9684-0312-08 9684-0310-08	SET SCREW	
8301 8302	9712-0300-13 9712-0400-13	WASHER	
8501 8506	9716-0300-01 9716-0400-01	WASHER	
9104 9105 9107 9112 9114	9721-0250-01 9721-0300-01 9721-0400-01 9721-0600-01 9721-0700-01	RETAINING RING	
9301 9302 9303	1066-1151-01 4425-3001-01 4425-3002-01	RETAINING RING	

PART NO.	FIG.	INDEX	QTY		PART NO.	FIG.	INDEX	QTY		PART NO.	FIG.	INDEX	QTY		PART NO.	FIG.	INDEX	QTY	
0704-5401-01	17	04AA	2		1136-7817-01	01	62AA	1		1139-1555-02	06	33AA	1		1139-3027-02	16	42AA	1	
0722-4913-01	19	08AA	3		1136-7818-01	01	63AA	1		1139-1556-01	06	06AA	1		1139-3030-01	16	31AA	1	
0993-5529-01	14	10AA	2		1136-7823-01	01	64AA	1		1139-1557-01	06	31AA	1		1139-3031-02	16	14AA	1	
1012-1624-01	02	31AA	1		1138-0115-03	15	09AA	1		1139-1558-01	06	32AA	1		1139-3032-01	16	40AA	1	
1012-5586-01	14	60AA	1		1139-0105-03	03	26AA	1		1139-1559-01	06	36AA	1		1139-3033-01	16	43AA	1	
1012-5587-01	14	62AA	1		1139-0106-01	02	43AA	1		1139-1560-01	06	41AA	1		1139-3034-02	16	38AA	1	
1021-4707-01	19	07AA	1		1139-0166-02	17	31AA	1		1139-1561-01	06	30AA	1		1139-3035-01	16	37AA	2	
1031-4403-01	19	09AA	1		1139-0201-01	06	16AA	1		1139-1562-01	06	42AA	1		1139-3037-01	16	35AA	1	
1032-1606-02	11	06AA	1		1139-0202-01	06	22AA	1		1139-1563-01	06	38AA	1		1139-3038-01	16	44AA	1	
1033-3102-01	01	28AA	1		1139-0205-01	07	57AA	1		1139-1564-01	06	40AA	1		1139-3039-02	16	09AA	1	
1033-4402-01	17	29AA	2		1139-0207-03	06	08AA	1		1139-1604-01	02	18AA	1		1139-3040-12	16	20AA	1	
1035-4904-01	10	16AA	1		1139-0210-01	02	34AA	1		1139-1608-01	05	06AA	1		1139-3045-02	16	05AA	1	
1036-4524-02	10	25AA	1		1139-0211-01	02	25AA	1		1139-1612-01	02	24AA	1		1139-3049-01	15	33AA	1	
1052-1603-01	11	58AA	1		1139-0237-03	17	15AA	1		1139-1614-01	02	11AA	1		1139-3050-01	15	27AA	1	
1052-2306-01	04	09AA	2		1139-0244-01	17	21AA	1		1139-1615-01	02	29AA	1		1139-3051-02	08	32AA	1	
1052-4412-01	18	13AA	1		1139-0246-01	17	26AA	1		1139-1620-01	02	21AA	3		1139-3053-03	08	29AA	1	
1052-5224-01	18	20AA	1		1139-0249-01	14	24AA	1		1139-1621-01	02	15AA	2		1139-3057-01	08	12AA	1	
1052-5409-01	17	03AA	1		1139-0250-01	10	29AA	1		1139-1625-01	02	14AA	5		1139-3068-01	08	18AA	1	
1053-3103-01	01	23AA	1		1139-0251-12	11	37AA	1		1139-1651-01	07	58AA	1		1139-3071-01	16	23AA	1	
1053-3869-01	01	14AA	1		1139-0405-01	12	02AA	1		1139-1652-01	07	52AA	1		1139-3074-01	08	09AA	1	
1054-3765-13	14	35AA	5		1139-0420-01	12	40AA	1		1139-1701-04	01	51AA	1		1139-3077-03	16	11AA	1	
1054-3773-01	14	34AA	5		1139-0752-01	11	45AA	1		1139-1702-02	01	52AA	1		1139-3079-01	08	04AA	1	
1054-4753-01	14	47AA	4		1139-0753-01	11	20AA	1		1139-1703-02	01	56AA	3		1139-3082-01	16	15AA	1	
1061-6845-03	04	01AA	1		1139-0755-01	13	44AA	1		1139-1704-14	01	54AA	1		1139-3089-01	16	33AA	1	
1061-6845-03	07	01AA	1		1139-0756-01	13	37AA	2		1139-1705-01	01	53AA	2		1139-3099-01	08	05AA	1	
1065-0229-01	06	25AA	1		1139-1010-04	07	60AA	1		1139-1706-01	01	58AA	1		1139-3102-01	12	27AA	2	
1065-1360-01	01	13AA	1		1139-1011-01	07	61AA	2		1139-1727-01	01	02AA	1		1139-3103-01	01	39AA	4	
1065-1504-02	05	05AA	2		1139-1012-02	07	62AA	1		1139-2005-01	03	04AA	1		1139-3104-01	01	40AA	4	
1065-1506-02	05	09AA	2		1139-1022-01	01	22AA	1		1139-2008-03	04	08AA	1		1139-3115-01	12	32AA	1	
1065-1757-01	06	26AA	1		1139-1030-01	07	64AA	1		1139-2009-01	04	24AA	2		1139-3117-01	12	36AA	1	
1065-2053-01	04	35AA	2		1139-1035-01	01	01AA	1		1139-2014-01	07	43AA	2		1139-3118-01	12	26AA	1	
1065-2753-01	07	33AA	1		1139-1036-03	07	63AA	1		1139-2016-01	07	44AA	1		1139-3123-01	12	22AA	2	
1065-3086-01	18	22AA	1		1139-1038-01	03	08AA	1		1139-2018-01	07	48AA	1		1139-3124-01	12	10AA	1	
1065-3090-01	15	30AA	1		1139-1039-01	01	04AA	2		1139-2019-01	07	49AA	1		1139-3126-01	12	41AA	1	
1065-5857-01	14	17AA	4		1139-1040-01	01	27AA	1		1139-2020-01	07	45AA	1		1139-3127-01	08	36AA	1	
1065-5871-01	14	23AA	2		1139-1044-01	01	59AA	2		1139-2021-02	07	47AA	1		1139-3127-01	12	09AA	1	
1065-5872-01	07	69AA	1		1139-1303-01	05	08AA	1		1139-2022-01	14	33AA	1		1139-3129-01	12	07AA	1	
1066-1283-01	03	03AA	1		1139-1304-01	06	37AA	1		1139-2026-01	03	14AA	1		1139-3131-01	08	25AA	1	
1067-1415-02	05	14AA	1		1139-1318-12	02	08AA	1		1139-2027-02	03	15AA	1		1139-3132-01	12	42AA	1	
1067-2513-01	04	13AA	3		1139-1319-12	02	09AA	1		1139-2029-01	03	05AA	1		1139-3134-01	08	15AA	1	
1067-2513-01	08	06AA	2		1139-1320-12	02	10AA	1		1139-2030-01	03	07AA	2		1139-3136-01	04	02AA	1	
1067-2566-01	08	07AA	1		1139-1321-01	02	05AA	1		1139-2033-03	03	17AA	1		1139-3141-01	01	35AA	1	
1067-5507-01	10	32AA	1		1139-1324-02	02	42AA	1		1139-2035-01	04	56AA	1		1139-3143-01	12	01AA	1	
1067-5508-01	10	26AA	3		1139-1327-01	02	35AA	1		1139-2041-02	07	46AA	1		1139-3144-01	01	45AA	1	
1067-5509-01	10	27AA	2		1139-1328-02	05	01AA	1		1139-2316-02	03	27AA	1		1139-3145-01	01	44AA	1	
1070-3072-01	18	12AA	1		1139-1333-02	02	22AA	1		1139-2323-01	07	56AA	1		1139-3146-01	01	42AA	1	
1076-3109-01	12	03AA	3		1139-1334-02	05	02AA	2		1139-2338-01	03	19AA	2		1139-3147-01	12	08AA	2	
1077-2101-02	07	50AA	1		1139-1422-01	02	37AA	1		1139-2338-01	07	54AA	2		1139-3153-01	16	24AA	4	
1079-5530-01	13	09AA	2		1139-1458-04	05	07AA	1		1139-2338-01	15	24AA	2		1139-3156-01	08	35AA	1	
1080-7014-01	14	56AA	1		1139-1461-01	05	12AA	1		1139-2346-01	08	20AA	1		1139-3167-01	12	11AA	2	
1100-1330-05	17	11AA	1		1139-1505-03	06	12AA	1		1139-2507-01	04	26AA	1		1139-3181-01	16	29AA	1	
1100-1332-14	18	02AA	2		1139-1509-01	06	19AA	1		1139-2509-01	13	08AA	1		1139-3212-02	04	47AA	1	
1100-1340-05	14	12AA	2		1139-1510-01	06	20AA	1		1139-2530-01	04	12AA	2		1139-3213-02	04	53AA	1	
1100-1340-05	17	10AA	1		1139-1511-01	06	20BA	1		1139-2558-02	07	36AA	1		1139-3214-01	04	45AA	1	
1100-1362-11	04	07AA	1		1139-1512-01	06	20CA	1		1139-2559-01	07	24AA	1		1139-3215-01	04	34AA	2	
1100-3130-08	10	22AA	3		1139-1513-02	06	43AA	1		1139-2560-01	07	35AA	1		1139-3252-03	11	34AA	1	
1129-7303-01	10	53AA	1		1139-1516-02	06	13AA	1		1139-3003-14	08	30AA	1		1139-3253-01	11	33AA	1	
1129-7303-01	13	06AA	2		1139-1517-01	06	11AA	1		1139-3008-01	08	11AA	1		1139-3255-02	11	29AA	1	
1129-7303-01	15	38AA	1		1139-1518-12	06	24AA	1		1139-3009-02	08	10AA	1		1139-3256-02	11	16AA	1	
1132-2044-01	07	18AA	2		1139-1521-01	06	17AA	1		1139-3010-02	08	13AA	1		1139-3257-01	11	28AA	1	
1136-1423-01	06	15AA	1		1139-1523-02	06	18AA	2		1139-3012-02	16	03AA	1		1139-3258-01	11	35AA	1	
1136-2131-03	12	05AA	2		1139-1530-01	02	47AA	1		1139-3013-02	16	08AA	1		1139-3259-01	11	31AA	1	
1136-2131-03	18	32AA	1		1139-1532-03	02	33AA	1		1139-3014-02	16	04AA	2		1139-3260-01	11	56AA	2	
1136-3537-01	12	43AA	1		1139-1533-01	02	46AA	1		1139-3016-01	16	17AA	1		1139-3261-01	11	30AA	2	
1136-3538-01	12	44AA	1		1139-1535-02	02	45AA	1		1139-3017-01	16	19AA	1		1139-3301-03	17	34AA	1	
1136-5753-01	14	59AA	1		1139-1537-01	06	05AA	1		1139-3018-01	16	22AA	1		1139-3303-14	17	33AA	1	
1136-5805-02	14	16AA	4		1139-1548-01	06	01AA	1		1139-3019-01	16	01AA	1		1139-3307-01	18	16AA	1	
1136-5806-01	14	15AA	4		1139-1551-02	06	39AA	1		1139-3020-02	16	02AA	1		1139-3309-01	18	23AA	1	
1136-6052-12	11	40AA	1		1139-1552-01	06	02AA	1		1139-3023-02	04	57AA	1		1139-3314-12	17	27AA	1	
1136-7326-01	01	25BA	1		1139-1553-02	06	03AA	2		1139-3026-02	16	41AA	1		1139-3315-02	17	25AA	1	

PART NO.	FIG.	INDEX	QTY		PART NO.	FIG.	INDEX	QTY		PART NO.	FIG.	INDEX	QTY		PART NO.	FIG.	INDEX	QTY	
1139-3316-01	18	24AA	1		1139-4253-02	10	03AA	1		1139-5543-01	14	42AA	1		1151-0151-01	11	48AA	1	
1139-3317-01	18	25AA	1		1139-4254-01	10	01AA	1		1139-5544-01	14	29AA	1		1151-0152-02	05	17AA	1	
1139-3318-01	18	15AA	1		1139-4255-01	10	07AA	1		1139-5546-01	14	21AA	2		1151-0153-02	05	17BA	1	
1139-3320-01	18	21AA	1		1139-4256-01	10	02AA	1		1139-5548-01	13	10AA	2		1151-0156-03	05	10AA	1	
1139-3321-01	18	27AA	2		1139-4257-01	10	10AA	2		1139-5549-01	14	46AA	1		1151-0168-02	08	27AA	1	
1139-3322-01	18	33AA	2		1139-4258-01	10	09AA	1		1139-5552-02	14	25AA	1		1151-0170-01	01	55AA	1	
1139-3326-13	18	29AA	1		1139-4259-01	10	18AA	1		1139-5554-01	14	19AA	1		1151-0171-01	01	55BA	1	
1139-3327-13	17	01AA	1		1139-4260-01	10	04AA	2		1139-5558-01	14	09AA	9		1151-0172-01	01	55CA	1	
1139-3328-16	17	42AA	1		1139-4261-01	10	13AA	1		1139-5560-01	14	44AA	2		1151-0203-02	07	02AA	1	
1139-3329-01	17	43AA	1		1139-4262-01	10	05AA	1		1139-5561-01	14	27AA	2		1151-0207-02	07	41AA	1	
1139-3330-01	17	06AA	1		1139-4263-01	10	11AA	1		1139-5701-02	10	56AA	1		1151-0208-01	03	13AA	1	
1139-3332-03	17	38AA	1		1139-4264-01	10	14AA	1		1139-5702-08	10	39AA	1		1151-0209-01	07	03AA	1	
1139-3333-03	17	14AA	1		1139-4265-01	10	06AA	1		1139-5703-01	11	42AA	1		1151-0210-01	07	25AA	1	
1139-3339-01	17	16AA	1		1139-4268-01	10	19AA	1		1139-5704-02	10	51AA	1		1151-0211-01	04	61AA	1	
1139-3340-01	17	20AA	1		1139-4502-01	13	02AA	1		1139-5710-13	10	24AA	1		1151-0212-01	04	14AA	1	
1139-3341-01	17	36AA	1		1139-4503-01	13	28AA	1		1139-5711-17	10	20AA	1		1151-0213-01	04	11AA	1	
1139-3342-12	17	32AA	1		1139-4504-01	03	02AA	1		1139-5713-12	10	49AA	1		1151-0214-01	04	20AA	1	
1139-3344-01	17	40AA	1		1139-4505-02	07	66AA	1		1139-5715-01	10	31AA	1		1151-0215-01	04	04AA	1	
1139-3346-02	18	05AA	1		1139-4506-01	07	37AA	1		1139-5719-01	10	28AA	1		1151-0216-01	08	03AA	1	
1139-3348-02	18	06AA	1		1139-4507-01	13	03AA	1		1139-5720-01	10	41AA	2		1151-0217-01	07	40AA	1	
1139-3349-01	18	34AA	1		1139-4510-01	13	27AA	1		1139-5721-02	10	42AA	2		1151-0218-01	18	03AA	1	
1139-3351-02	18	01AA	1		1139-4512-01	07	67AA	1		1139-5723-01	10	43AA	1		1151-0499-01	19	15AA	1	
1139-3353-01	17	17AA	1		1139-4513-01	13	01AA	1		1139-5724-02	11	14AA	2		1151-1313-01	02	20AA	1	
1139-3354-01	18	18AA	1		1139-4515-01	07	65AA	2		1139-5725-01	10	45AA	1		1151-1314-01	02	04AA	1	
1139-3358-01	17	44AA	1		1139-5002-02	09	03AA	1		1139-5725-01	11	15AA	2		1151-1316-01	02	06AA	1	
1139-3361-01	17	19AA	1		1139-5003-02	09	09AA	1		1139-5726-01	10	38AA	1		1151-1322-01	02	02AA	1	
1139-3362-01	17	23AA	1		1139-5004-03	09	14AA	1		1139-5728-02	10	37AA	1		1151-1325-01	02	23AA	1	
1139-3364-01	18	28AA	1		1139-5005-01	09	13AA	1		1139-5729-01	10	30AA	1		1151-1326-01	02	27AA	1	
1139-3365-01	17	35AA	1		1139-5006-01	09	12AA	2		1139-5730-01	10	47AA	1		1151-1329-01	02	39AA	1	
1139-3366-01	17	37AA	1		1139-5009-01	09	08AA	1		1139-5734-01	11	38AA	1		1151-1330-01	02	03AA	1	
1139-3367-01	18	14AA	1		1139-5010-01	09	05AA	1		1139-5739-01	10	55AA	1		1151-1337-01	02	38AA	1	
1139-3368-01	18	08AA	1		1139-5015-01	03	06AA	1		1139-5742-01	10	52AA	1		1151-1354-01	02	44AA	1	
1139-3369-01	18	07AA	2		1139-5017-02	09	25AA	1		1139-6814-02	12	04AA	1		1151-1355-01	02	01AA	1	
1139-3370-01	18	04AA	1		1139-5018-04	09	17AA	1		1139-6816-02	14	51AA	1		1151-1356-01	02	26AA	1	
1139-3371-14	18	31AA	1		1139-5018-04	09	18AA	2		1139-6825-01	06	29AA	1		1151-1413-01	05	03AA	1	
1139-3372-01	18	26AA	1		1139-5020-02	09	07AA	1		1139-7332-12	01	31AA	1		1151-1508-01	06	14AA	1	
1139-3373-02	18	17AA	1		1139-5021-01	09	01AA	1		1139-7347-01	01	25AA	1		1151-1531-01	06	09AA	1	
1139-3374-01	17	30AA	1		1139-5022-01	09	02AA	1		1139-7360-01	17	05AA	1		1151-1534-01	06	10AA	1	
1139-3376-03	17	09AA	2		1139-5023-01	09	16AA	2		1139-7361-01	10	57AA	1		1151-1538-01	06	07AA	1	
1139-3377-01	17	12AA	1		1139-5026-01	09	04AA	1		1139-7801-01	05	13AA	1		1151-1539-02	02	36AA	1	
1139-3378-01	17	08AA	1		1139-5029-01	09	20AA	1		1142-3005-01	08	24AA	1		1151-1571-01	06	21AA	1	
1139-3380-03	17	07AA	1		1139-5209-01	11	59AA	1		1142-3007-01	04	31AA	1		1151-1602-01	02	32AA	1	
1139-3381-02	17	41AA	1		1139-5215-01	10	48AA	1		1142-3042-01	16	21AA	1		1151-1603-01	02	17AA	1	
1139-3382-01	17	39AA	1		1139-5216-01	11	11AA	1		1142-3059-13	04	43AA	1		1151-1611-01	02	19AA	1	
1139-4022-01	07	14AA	1		1139-5219-01	10	54AA	1		1142-3065-01	08	17AA	1		1151-1613-01	02	12AA	1	
1139-4025-01	07	15AA	1		1139-5220-01	11	07AA	1		1142-3101-02	01	48AA	1		1151-1630-01	02	41AA	1	
1139-4031-02	03	09AA	1		1139-5221-01	11	08AA	3		1142-3105-03	01	43AA	1		1151-1653-01	07	42AA	1	
1139-4033-02	03	10AA	1		1139-5223-01	11	09AA	1		1142-3106-01	08	01AA	1		1151-1753-01	01	11AA	1	
1139-4034-03	03	12AA	1		1139-5225-02	11	61AA	1		1142-3108-01	01	37AA	1		1151-1754-01	01	11BA	1	
1139-4053-02	13	38AA	1		1139-5226-01	11	27AA	1		1142-3201-06	04	37AA	1		1151-1755-01	01	11CA	1	
1139-4056-01	13	32AA	1		1139-5228-01	10	50AA	1		1142-3202-05	04	46AA	1		1151-2002-02	03	32AA	1	
1139-4057-01	13	42AA	2		1139-5229-01	11	18AA	1		1142-3203-01	04	41AA	1		1151-2004-02	03	30AA	1	
1139-4064-01	13	30AA	1		1139-5231-01	11	12AA	1		1142-3204-01	04	40AA	1		1151-2051-01	03	33AA	1	
1139-4065-01	13	45AA	1		1139-5233-02	11	52AA	1		1142-5029-01	09	06AA	1		1151-2052-01	03	34AA	1	
1139-4066-01	13	39AA	1		1139-5235-01	11	53AA	1		1142-7301-12	01	41AA	1		1151-2102-03	04	28AA	1	
1139-4067-01	13	48AA	3		1139-5240-01	11	46AA	1		1142-7301-12	04	32AA	2		1151-2103-01	04	33AA	1	
1139-4068-01	13	31AA	1		1139-5246-01	11	22AA	1		1144-0168-01	11	44AA	1		1151-2104-02	04	39AA	1	
1139-4069-01	10	17AA	1		1139-5248-01	11	39AA	1		1145-3208-01	12	31AA	2		1151-2105-01	07	55AA	1	
1139-4069-01	13	33AA	1		1139-5249-01	11	02AA	2		1146-5535-01	14	55AA	1		1151-2306-02	15	01AA	1	
1139-4071-02	13	25AA	1		1139-5250-01	11	03AA	2		1149-2316-01	03	27BA	1		1151-2310-02	15	22AA	1	
1139-4072-01	13	05AA	1		1139-5251-01	11	54AA	1		1149-2356-01	15	13AA	1		1151-2317-01	15	25AA	1	
1139-4073-01	13	22AA	1		1139-5252-02	11	21AA	1		1149-3116-01	12	18AA	1		1151-2320-02	04	25AA	1	
1139-4074-01	12	17AA	1		1139-5253-01	11	43AA	1		1149-3117-01	12	24AA	1		1151-2321-01	07	30AA	1	
1139-4075-01	13	24AA	1		1139-5254-01	11	26AA	2		1149-5034-01	09	10AA	1		1151-2333-03	07	06AA	1	
1139-4077-01	13	35AA	4		1139-5255-01	11	17AA	2		1149-5504-01	14	37AA	1		1151-2360-01	15	34AA	1	
1139-4213-01	10	36AA	1		1139-5256-01	11	13AA	1		1149-5621-01	14	36AA	3		1151-2368-01	15	26AA	1	
1139-4214-02	10	34AA	2		1139-5509-02	14	54AA	1		1149-5622-01	14	38AA	3		1151-2369-01	04	51AA	1	
1139-4219-01	10	40AA	1		1139-5514-02	14	41AA	1		1149-5623-01	14	39AA	2		1151-2371-02	15	35AA	1	
1139-4251-02	10	12AA	1		1139-5538-01	14	18AA	2		1149-6842-01	04	23AA	1		1151-2502-01	04	19AA	1	
1139-4252-01	10	08AA	1		1139-5542-01	14	45AA	1		1151-0132-02	13	23AA	1		1151-2503-01	04	21AA	2	

PART NO.	FIG.	INDEX	QTY		PART NO.	FIG.	INDEX	QTY		PART NO.	FIG.	INDEX	QTY		PART NO.	FIG.	INDEX	QTY	
1151-2505-01	04	22AA	1		1151-4528-01	07	74AA	1		1174-0338-02	10	59EA	1		1174-7801-01	01	61AA	1	
1151-2512-01	04	18AA	1		1151-4529-01	07	75AA	2		1174-0345-02	14	67AA	1		1174-7901-01	19	16AA	1	
1151-2515-01	04	17AA	1		1151-5024-01	09	21AA	1		1174-0346-02	14	67BA	1		1175-1004-01	01	47AA	1	
1151-2516-02	04	15AA	1		1151-5031-02	09	22AA	1		1174-0359-01	13	49AA	1		1175-1005-02	01	15AA	1	
1151-2518-01	04	10AA	1		1151-5032-01	09	24AA	1		1174-0359-01	13	49CA	1		1175-1006-01	01	06AA	1	
1151-2521-01	04	16AA	1		1151-5033-02	09	23AA	1		1174-0367-01	13	49BA	1		1175-1037-01	01	19AA	1	
1151-2525-01	04	05AA	1		1151-5207-01	11	05AA	1		1174-0367-01	13	49DA	1		1175-1601-01	02	13AA	1	
1151-2555-01	07	12AA	1		1151-5214-01	11	04AA	2		1174-0368-01	10	58AA	1		1175-2384-01	15	19AA	1	
1151-2557-01	07	20AA	1		1151-5218-01	11	57AA	1		1174-0656-01	11	55AA	1		1175-7307-01	16	27AA	1	
1151-2561-01	07	05AA	1		1151-5271-01	11	60AA	2		1174-0901-01	01	65AA	1		1175-7375-01	01	29AA	1	
1151-2563-01	07	22AA	1		1151-5501-02	14	61AA	1		1174-1002-01	01	05AA	1		1175-7376-01	01	29BA	1	
1151-2565-01	07	04AA	1		1151-5502-01	13	11AA	1		1174-1007-02	01	09AA	1		1175-7377-01	01	29CA	1	
1151-2567-01	07	21AA	1		1151-5503-02	14	48AA	1		1174-1009-02	01	49AA	1		1176-0101-04	15	07AA	1	
1151-2569-01	07	34AA	1		1151-5506-01	14	08AA	1		1174-1013-01	04	36AA	1		1176-0451-02	01	32AA	1	
1151-2574-01	07	51AA	1		1151-5507-01	14	57AA	1		1174-1014-01	04	30AA	1		1176-0452-02	01	32BA	1	
1151-2575-01	07	31AA	1		1151-5510-01	14	50AA	1		1174-1015-01	01	17AA	2		1176-0453-02	01	32CA	1	
1151-2576-01	07	17AA	1		1151-5513-01	14	52AA	1		1174-1017-01	01	24AA	2		1176-0453-02	01	32FA	1	
1151-2578-01	04	06AA	1		1151-5523-01	14	40AA	1		1174-1018-01	01	34AA	1		1176-0455-02	01	32DA	1	
1151-2579-01	04	27AA	1		1151-5532-02	14	13AA	1		1174-1019-01	04	49AA	1		1176-0458-02	01	32EA	1	
1151-2580-02	07	68AA	1		1151-5534-01	14	26AA	1		1174-1020-01	04	54AA	1		1176-1001-02	01	33AA	1	
1151-3001-01	08	23AA	4		1151-5539-01	14	53AA	1		1174-1023-01	03	16AA	1		1176-1046-02	01	33BA	1	
1151-3001-01	08	37AA	1		1151-5550-01	04	60AA	1		1174-1031-01	01	21AA	1		1176-6601-02	15	08AA	1	
1151-3007-01	08	14AA	1		1151-5553-01	14	31AA	1		1174-1033-01	01	16AA	1		1176-6803-01	15	11AA	1	
1151-3110-02	08	31AA	1		1151-5601-01	14	32AA	1		1174-1041-01	01	10AA	1		1176-6835-02	15	11BA	1	
1151-3112-02	12	33AA	1		1151-5603-01	14	03AA	1		1174-1042-01	01	03AA	1		1176-7373-01	01	60AA	1	
1151-3114-01	12	20AA	2		1151-5604-02	14	02AA	1		1174-1047-02	01	33CA	1		1200-1342-02	16	13AA	1	
1151-3121-01	12	14AA	1		1151-5605-01	14	04AA	1		1174-1052-01	01	50AA	1		1200-1346-12	15	28AA	2	
1151-3122-02	12	37AA	1		1151-5606-02	14	07AA	1		1174-1457-01	05	04AA	1		1200-1422-02	02	16AA	2	
1151-3137-02	08	08AA	1		1151-5608-01	14	66AA	1		1174-1525-01	06	27AA	1		1200-1422-02	12	28AA	1	
1151-3168-01	12	39AA	1		1151-5610-02	14	14AA	2		1174-2301-01	03	22AA	1		1200-1431-01	07	19AA	2	
1151-3169-01	11	36AA	1		1151-5611-01	14	11AA	2		1174-2308-01	04	55AA	1		1200-2105-02	16	32AA	1	
1151-3170-02	16	12AA	1		1151-5612-01	14	06AA	2		1174-2354-01	15	36AA	1		1200-2105-05	08	28AA	1	
1151-3176-01	12	34AA	1		1151-5750-01	10	21AA	1		1174-2382-01	04	58AA	1		1200-2105-05	12	12AA	2	
1151-3177-01	12	15AA	1		1151-6805-01	08	22AA	1		1174-2383-01	03	25AA	1		1200-2125-01	16	36AA	2	
1151-3179-01	12	13AA	1		1151-6808-12	07	38AA	1		1174-2386-01	13	21AA	1		1200-2226-22	16	07AA	1	
1151-3191-01	12	30AA	1		1151-6809-01	10	46AA	1		1174-2387-01	19	13BA	1		1200-3121-07	08	02AA	1	
1151-3192-01	12	19AA	1		1151-6830-01	07	07AA	1		1174-2388-01	07	28AA	1		1200-3121-09	08	33AA	1	
1151-3209-01	04	38AA	1		1151-7308-01	16	06AA	1		1174-2388-01	15	20AA	2		1200-3131-03	07	23AA	1	
1151-3210-02	04	29AA	1		1151-7311-01	01	12AA	1		1174-3022-02	16	26AA	1		1200-3134-16	08	16AA	2	
1151-3250-01	11	32AA	1		1151-7317-01	01	30AA	1		1174-3130-01	01	46AA	1		1200-3134-16	14	28AA	2	
1151-3251-01	12	25AA	1		1151-7320-01	01	26AA	1		1174-3151-02	16	28AA	1		1200-3211-08	11	51AA	1	
1151-3262-01	11	41AA	1		1151-7322-12	16	30AA	1		1174-3161-02	16	28BA	1		1200-3221-07	18	11AA	5	
1151-3300-01	15	14AA	1		1151-7381-13	16	18AA	1		1174-3196-01	16	25AA	4		1200-3231-05	12	38AA	2	
1151-3300-01	17	24AA	4		1151-7382-13	16	16AA	1		1174-3305-01	17	13AA	1		1200-5212-04	08	34AA	1	
1151-3310-01	17	22AA	1		1151-7383-01	16	10AA	1		1174-4230-01	10	33AA	2		1200-5212-04	12	06AA	2	
1151-3501-01	13	17AA	1		1151-7801-01	05	16AA	1		1174-5012-02	09	15AA	1		1200-5232-10	16	39AA	1	
1151-3502-01	13	14AA	1		1151-7802-01	05	11AA	1		1174-5204-02	11	47AA	1		1273-3048-01	15	29AA	2	
1151-3503-01	13	12AA	1		1152-0220-01	08	21AA	1		1174-5206-02	11	23AA	1		1273-3505-01	12	35AA	1	
1151-3505-01	13	18AA	1SET		1152-2301-01	01	20AA	1		1174-5222-01	11	01AA	1		1273-3535-01	01	36AA	1	
1151-3506-01	13	13AA	4		1152-2370-02	04	52AA	1		1174-5224-01	11	24AA	1		1273-3535-01	16	34AA	1	
1151-3510-02	13	20AA	1		1152-3193-01	01	38AA	1		1174-5275-02	11	50AA	1		1300-3122-32	04	03AA	1	
1151-3511-01	13	15AA	2		1152-3263-01	04	42AA	1		1174-5276-01	11	49AA	1		1300-3132-12	14	30AA	1	
1151-3512-01	13	16AA	2		1156-2019-01	19	13AA	1		1174-5505-01	14	65AA	1		1400-1122-04	07	08AA	2	
1151-4021-01	07	13AA	1		1156-3073-01	18	19AA	2		1174-5521-01	14	63AA	1		1400-1122-04	13	26AA	2	
1151-4023-01	07	16AA	1		1158-2363-01	04	48AA	1		1174-5522-01	14	22AA	1		1400-1132-06	06	04AA	1	
1151-4024-01	07	09AA	1		1158-2363-01	07	73AA	1		1174-5574-01	14	20AA	1		1400-1133-08	06	34AA	2	
1151-4051-03	13	34AA	1		1173-3119-01	12	29AA	1		1174-5602-01	14	05AA	1		1400-1134-07	10	15AA	1	
1151-4052-03	13	43AA	1		1173-3304-01	17	28AA	1		1174-5609-01	14	43AA	1		1400-1154-06	10	23AA	1	
1151-4054-01	13	41AA	1		1174-0103-01	15	05AA	1		1174-5762-01	10	44AA	1		1400-1167-05	13	04AA	2	
1151-4058-02	13	46AA	1		1174-0104-01	15	15AA	1		1174-6501-01	03	01AA	1		1400-1226-03	11	19AA	2	
1151-4059-02	13	47AA	1		1174-0105-01	15	15BA	1		1174-6801-02	03	29AA	1		1400-2110-01	13	36AA	2	
1151-4218-01	10	35AA	1		1174-0114-01	15	15CA	1		1174-6802-02	03	29BA	1		1500-2640-04	03	18AA	1	
1151-4273-01	13	07AA	1		1174-0167-01	01	18AA	1		1174-6807-01	15	32AA	1		1500-2640-04	07	53AA	1	
1151-4501-02	07	32AA	1		1174-0202-01	07	10AA	1		1174-6812-01	06	23AA	1		4425-1059-12	17	02AA	1	
1151-4509-01	07	26AA	1		1174-0203-01	11	25AA	1		1174-6817-02	03	29CA	1		4425-6826-01	18	10AA	1	
1151-4520-01	07	70AA	1		1174-0254-01	11	10AA	1		1174-6845-01	15	17AA	1		9312-1610-11	09	19AA	1	
1151-4521-01	07	72AA	1		1174-0335-02	10	59AA	1		1174-6847-01	15	21AA	1		9313-1610-11	13	19AA	1	
1151-4522-01	07	71AA	1		1174-0336-02	10	59BA	1		1174-6850-01	13	50AA	1		9313-1810-11	07	59AA	1	
1151-4523-01	01	07AA	1		1174-0336-02	10	59DA	1		1174-7334-01	16	27BA	1		9313-1810-31	07	27AA	1	
1151-4524-01	07	29AA	2		1174-0338-02	10	59CA	1		1174-7393-02	01	08AA	1		9314-1310-21	02	40AA	1	

PART NO.	FIG.	INDEX	QTY		PART NO.	FIG.	INDEX	QTY		PART NO.	FIG.	INDEX	QTY		PART NO.	FIG.	INDEX	QTY	
9314-1310-31	06	28AA	1																
9314-1610-11	02	30AA	1																
9314-2610-11	04	50AA	1																
9314-2610-11	07	11AA	1																
9321-2310-32	08	19AA	1																
9321-2310-41	18	09AA	1																
9322-1610-11	12	23AA	1																
9322-1610-21	12	21AA	1																
9322-1610-31	17	18AA	1																
9323-1410-11	03	20AA	1																
9324-1810-51	15	18AA	1																
9324-1810-61	15	18BA	1																
9325-1610-12	15	04AA	1																
9325-1610-22	15	04BA	1																
9325-2610-21	15	12BA	1																
9325-2610-51	15	12AA	1																
9325-3010-21	03	28BA	1																
9325-3010-31	03	28AA	1																
9325-3610-11	03	28CA	1																
9326-1310-61	13	40AA	1																
9326-1410-31	15	37AA	1																
9326-2820-11	01	57AA	1																
9331-1810-11	03	23AA	1																
9332-1310-11	15	31AA	6																
9332-5310-21	04	59AA	1																
9332-5810-11	03	21AA	1																
9334-1610-11	14	64AA	1																
9334-2610-11	02	07AA	1																
9335-1310-31	08	26AA	3																
9335-1310-31	09	11AA	1																
9335-1310-31	12	16AA	2																
9335-1310-31	14	49AA	1																
9335-1310-31	18	30AA	1																
9335-1310-41	02	28AA	1																
9335-1310-41	06	35AA	1																
9335-1310-51	07	39AA	1																
9343-4210-21	15	23AA	1																
9346-3610-31	15	16BA	1																
9346-3720-21	15	06AA	4																
9346-3720-51	15	16AA	1																
9351-1810-11	03	11AA	1																
9351-2610-11	05	15AA	1																
9351-2610-21	05	15BA	1																
9352-2610-21	14	58AA	1																
9352-2610-31	14	58BA	1																
9352-6310-11	04	44AA	1																
9352-6610-11	13	29AA	1																
9372-2610-11	14	01AA	1																
9381-4310-51	15	10CA	1																
9381-4310-81	15	10BA	1																
9381-4310-81	15	10DA	1																
9381-4610-31	15	10AA	1																
9384-1110-61	19	04AA	9																
9384-1211-01	19	04BA	5																
9384-1310-81	19	01AA	19																
9384-1310-91	19	05BA	12																
9384-1311-01	19	06AA	43																
9384-1311-11	19	14AA	1																
9384-1710-71	03	24AA	4																
9384-1820-31	19	02AA	2																
9384-1900-53	19	05AA	1																
9384-1900-56	03	31AA	4																
9384-1900-56	15	02AA	13																
9384-1900-61	15	03AA	4																
9384-1921-21	19	03AA	2																
9384-1921-31	19	03BA	3																
9384-2010-21	19	10AA	13																
9384-2010-31	19	11AA	2																
9384-2610-11	19	12AA	2																
9384-2800-36	19	10BA	4																



Copyright
1998 MINOLTA Co., Ltd.
Printed in Japan

1176-7995-21 98114150