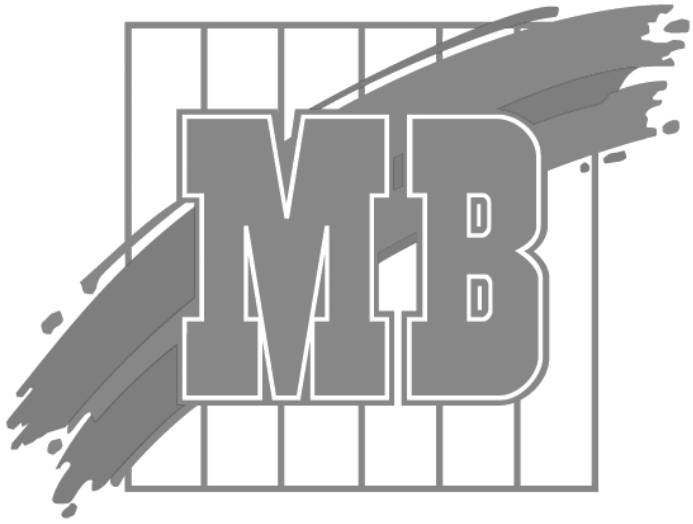

Service Manual

MB 5815

Safety Precautions for Inspection and Service

When performing inspection and service procedures, observe the following precautions to prevent accidents and ensure utmost safety.

✻ Depending on the model, some of the precautions given in the following do not apply.

Different markings are used to denote specific meanings as detailed below.



WARNING Indicates a potentially hazardous situation which, if not avoided, could result in death or serious injury.



CAUTION Indicates a potentially hazardous situation which, if not avoided, may result in minor or moderate injury. It may also be used to alert against unsafe practices.

The following graphic symbols are used to give instructions that need to be observed.



Used to call the service engineer attention to what is graphically represented inside the marking (including a warning).



Used to prohibit the service engineer from doing what is graphically represented inside the marking.



Used to instruct the service engineer to do what is graphically represented inside the marking.

 WARNING

1. Always observe precautions.



- Parts requiring special attention in this product will include a label containing the mark shown on the left plus precautionary notes. Be sure to observe the precautions.
- Be sure to observe the “Safety Information” given in Operator’s Manual.

2. Before starting the procedures, be sure to unplug the power cord.



- This product contains a high-voltage unit and a circuit with a large current capacity that may cause an electric shock or burn.
- The product also contains parts that can jerk suddenly and cause injure.
- If this product uses a laser, laser beam leakage may cause eye damage or blindness.

3. Use the specified parts.



- For replacement parts, always use the genuine parts specified in the manufacturer’s Parts Manual. Installing a wrong or unauthorized part could cause dielectric breakdown, overload, or undermine safety devices resulting in possible electric shock or fire.
- Replace a blown electrical fuse or thermal fuse with its corresponding genuine part specified in the manufacturer’s Parts Manual. Installing a fuse of a different make or rating could lead to a possible fire. If a thermal fuse blows frequently, the temperature control system is probably of a problem and action must be taken to eliminate the cause of the problem.

4. Handle the power cord with care and never use a multiple socket.



- Do not brake, crush or otherwise damage the power cord. Placing a heavy object on the power cord, or pulling or bending it may damage it, resulting in a possible fire or electric shock.
- Do not use a multiple outlet to which any other appliances or machines is connected.
- Be sure the power outlet meets or exceeds the specified capacity.

5. Be careful about the high-voltage parts.



- A part marked with the symbol shown on the left carries a high voltage. Touching it could result in an electric shock or burn. Be sure to unplug the power cord before servicing this part or the parts near it.

6. Do not keep your hands wet when performing the procedures.



- Do not unplug or plug in the power cord, or perform any kind of service or inspection with wet hands. Doing so could result in an electric shock.

7. Do not touch a high-temperature part.



- A part marked with the symbol shown on the left and other parts such as the exposure lamp and fusing roller can be very hot while the machine is energized. Touching them may result in a burn.
- Wait until these parts have cooled down before replacing them or any surrounding parts.

8. Make a ground connection at all times (This item may not be effected in USA).



- Be sure to connect a ground wire to the ground terminal even when performing an inspection or repair. Without proper grounding, electrical leakage could result in an electric shock or fire.
- Never connect the ground wire to a gas pipe, water pipe, telephone ground wire, or a lightning conductor.

9. Do not remodel the product.



- Modifying this product in a manner not authorized by the manufacturer may result in a fire or electric shock. If this product uses a laser, laser beam leakage may cause eye damage or blindness.

10. Restore all parts and harnesses to their original positions.



- To promote safety and prevent product damage, make sure the harnesses are returned to their original positions and properly secured in their clamps and saddles in order to avoid hot parts, high-voltage parts, and sharp edges, or being crushed.
- To promote safety, make sure that all tubing and other insulating materials are returned to their original positions. Make sure that floating components mounted on the circuit boards are at their correct distance and position off the boards.

CAUTION

1. Precautions for Service Jobs

- A toothed washer and spring washer, if used originally, must be reinstalled. Omitting them may result in contact failure which could cause an electric shock or fire.
- When reassembling parts, make sure that the correct screws (size, type) are used in the correct places. Using the wrong screw could lead to stripped threads, poorly secured parts, poor insulating or grounding, and result in a malfunction, electric shock or injury.
- Take great care to avoid personal injury from possible burrs and sharp edges on the parts, frames and chassis of the product.
- When moving the product or removing an option, use care not to injure your back or allow your hands to be caught in mechanisms.

2. Precautions for Servicing with Covers and Parts Removed

- Wherever feasible, keep all parts and covers mounted when energizing the product.
- If energizing the product with a cover removed is absolutely unavoidable, do not touch any exposed live parts and use care not to allow your clothing to be caught in the moving parts. Never leave a product in this condition unattended.
- Never place disassembled parts or a container of liquid on the product parts falling into, or the liquid spilling inside, the mechanism could result in an electric shock or fire.
- Never use a flammable spray near the product. This could result in a fire.
- Make sure the power cord is unplugged before removing or installing circuit boards or plugging in or unplugging connectors.
- Always use the interlock switch actuating jig to actuate an interlock switch when a cover is opened or removed. The use of folded paper or some other object may damage the interlock switch mechanism, possibly resulting in an electric shock, injury or blindness.

3. Precautions for Working Environment

- The product must be placed on a flat, level surface that is stable and secure.
- Never place this product or its parts on an unsteady or tilting workbench when servicing.
- Provide good ventilation at regular intervals if a service job must be done in a confined space for a long period time.
- Avoid dusty locations and places exposed to oil mist or steam.
- Avoid working positions that may block the ventilation port of the product.

4. Precautions for Handling Batteries (Lithium, Nickel-Cadmium, etc.)

- Replace a rundown battery with the same type as specified in the manufacturer's parts manual.
- Before installing a new battery, make sure of the correct polarity of the installation or the battery could burst.
- Dispose of used batteries according to the local regulations. Never dispose of them at the user's premises or attempt to try to discharge one.

5. Precautions for Laser Beam (Products Employing Laser Only)

- Removing the cover marked with the following caution label could lead to possible exposure to the laser beam, resulting in eye damage or blindness. Be sure to unplug the power cord before removing this cover.
- If removing this cover while the power is ON is unavoidable, be sure to wear protective laser goggles that meet specifications.
- Make sure that no one enters the room when the machine is in this condition.
- When handling the laser unit, observe the “Precautions for Handling Laser Equipment.”

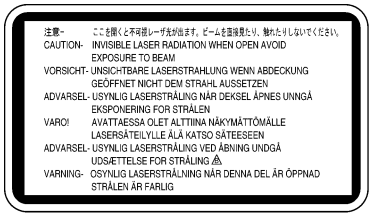

1155D036AA

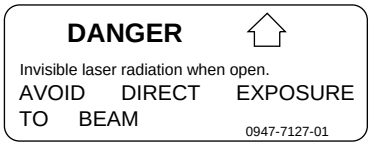

1144D270AA

Other Precautions

- To reassemble the product, reverse the order of disassembly unless otherwise specified.
- While the product is energized, do not unplug or plug connectors into the circuit boards or harnesses.
- The magnet roller generates a strong magnetic field. Do not bring it near a watch, floppy disk, magnetic card, or CRT tube.
- An air gun and vacuum cleaner generates a strong electrostatic charge that can destroy the ATDC sensor and other sensors. Before cleaning a component with one of these devices, be sure to remove all the sensors. Otherwise, use a blower brush and cloth when cleaning parts.
- When handling circuit boards with MOS ICs, observe the “INSTRUCTIONS FOR HANDLING THE PWBs WITH MOS ICs” (applicable only to the products using MOS ICs).
- The PC Drum is a very delicate component. Observe the precautions given in “HANDLING OF THE PC DRUM” because mishandling may result in serious image problems.
- Note that replacement of a circuit board may call for readjustments or resetting of particular items, or software installation.
- After completing a service job, perform a safety check. Make sure that all parts, wiring and screws are returned to their original positions.
- Check the area surrounding the service site for any signs of damage, wear or need of repair.
- Do not pull out the toner hopper while the toner bottle is turning. This could result in a damaged hopper motor or locking mechanism.
- If the product is to be run with the front door open, make sure that the toner hopper is in the locked position.

Used Batteries Precautions

(ALL Areas)

CAUTION

Danger of explosion if battery is incorrectly replaced.
Replace only with the same or equivalent type recommended by the manufacturer.
Dispose of used batteries according to the manufacturer's instructions.

(Germany only)

VORSICHT!

Explosinsgefahr bei unsachgemäßen austausch der batterie.
Ersatz nur durch denselben oder einen vom hersteller empfohlenen ähnlichen typ.
Entsorgung gebrauchter batterien nach angaben des herstellers.

(France)

ATTENTION

Ily a danger d'explosion s'ily a remplacement incorrec de la batterie.
Remplacer uniquement avec une batterie du meme type ou d'un type équivalent recommande par le constructueur.
Mettre au rebut les batteries usageés conformément aux instructions du fabricant.

(Denmark only)

ADVARSEL!

Lithiumbatteri - Eksplosionsfare ved fejlagtig håndtering Udskiftning må kun ske med batteri af samme fabrikat og type.
Levér det brugte batteri tilbage til leverandøren.

(Norway only)

ADVARSEL

Eksplosjonsfare ved feilaktig skifte av batteri.
Benytt samme batteritype eller en tilsvarende type anbefalt av apparatfabrikanten.
Brukte batterier kasseres i henhold til fabrikantens instruksjoner.

(Sweden only)

VARNING

Explosionsfara vid felaktigt batteribyte.
Använd samma batterityp eller en ekvivalent typ som rekommenderas av apparattillverkaren.
Kassera använt batteri enligt fabrikantens instruktion.

(Finland only)

VAROITUS

Paristo voi räjähtää, los se on virheellisesti asennettu.
Vaihda paristo ainoastaan laitevalmistajan suosittelemaan tyyppiin. Hävitä Käytetty paristo valmistajan ohjeiden mukaisesti.

CONTENTS

1. SERVICE INSTRUCTIONS D-1
1-1. INSTRUCTIONS FOR HANDLING THE PWBs WITH MOS ICs D-1
1-2. HANDLING OF THE PC DRUM D-1
1-3. PARTS WHICH MUST NOT BE TOUCHED D-4
(1) Screws D-4
(2) Variable Resistors on Board D-4
(3) Other Screws D-4
2. DISASSEMBLY/REASSEMBLY D-5
2-1. DOORS, COVERS, AND EXTERIOR PARTS: IDENTIFICATION AND REMOVAL PROCEDURES D-5
2-2. REMOVAL OF PWBs D-8
2-3. BELT INSTALLATIONS D-10
2-4. PAPER TAKE-UP/TRANSPORT SECTIONS D-11
(1) Removal of the Paper Take-Up Unit D-11
(2) Removal of the Paper Take-Up Rolls D-12
(3) Cleaning of the Paper Take-Up Rolls D-12
(4) Removal of the Suction Unit D-12
(5) Disassembly of the Suction Unit D-13
(6) Replacement of the Paper Lifting Springs (2nd Drawer): 23 cpm copier only D-14
(7) Disassembly of the Multi Bypass Table (15/18 cpm copier: OPTION) D-15
2-5. OPTICAL SECTION D-20
(1) Removal of the Lens Drive Cable D-20
(2) Winding of the Lens Drive Cable D-21
(3) Removal of the Scanner Drive Cable D-22
(4) Winding of the Scanner Drive Cable D-25
(5) Removal of the Scanner D-29
(6) Cleaning of the Exposure Lamp D-29
(7) Cleaning of the 1st/2nd/3rd Mirrors D-30
(8) Cleaning of the Lens and 4th Mirror D-30
(9) Cleaning of the Optical Section Cooling Fan Filter (15/18 cpm copier only) D-30
2-6. IMAGING UNIT D-31
(1) Disassembly, Cleaning, Replacement and Starter Changing of the Imaging Unit D-31
(2) Cleaning of the Main Erase Lamp D-35
(3) Cleaning of the Image Erase Lamp D-35
2-7. PC DRUM CHARGE CORONA/IMAGE TRANSFER CORONA UNIT D-37
(1) Cleaning of the PC Drum Charge Corona Housing D-37
(2) Cleaning of the PC Drum Charge Corona Grid Mesh D-38
(3) Cleaning of the Comb Electrode D-38
(4) Cleaning of the Image Transfer/Paper Separator Coronas Wires D-38
(5) Cleaning of the Image Transfer/Paper Separator Coronas Housing D-39
(6) Cleaning of the Lower Pre-Image Transfer Guide Plate D-39

(7) Replacement of the Ozone Filter D-39
2-8. FUSING UNIT D-40
(1) Removal of the Fusing Unit D-40
(2) Cleaning of the Pre-Fusing Guide Plate D-41
(3) Removal of the Upper Fusing Roller D-41
(4) Cleaning of the Upper Fusing Roller D-43
(5) Cleaning of the Upper Paper Separator Fingers D-43
(6) Cleaning of the Fusing Thermistor D-43
(7) Removal of the Lower Fusing Roller D-43
(8) Cleaning of the Lower Fusing Roller D-44
(9) Cleaning of the Lower Paper Separator Fingers D-44
(10) Disassembly of the Exit/Duplex Switching Unit (Option) D-45
3. ADJUSTMENT D-49
3-1. JIGS AND TOOLS USED D-49
3-2. ADJUSTMENT REQUIREMENTS LIST D-50
3-3. ADJUSTMENT OF SWITCHES D-51
(1) Adjustment of Front Door Interlock Switch S21 ..... D-51
3-4. ELECTRICAL/IMAGE ADJUSTMENTS D-52
(1) Adjustment of the Maximum Exposure Lamp Voltage for the Manual Mode D-52
(2) Adjustment of the Optimum Exposure Setting in the Manual Mode D-55
(3) Adjustment of the Optimum Exposure Setting in the Auto Mode D-56
(4) Adjustment of the ATDC Sensor D-57
(5) Adjustment of the Aperture Blades D-58
(6) Adjustment of the Multi Bypass Table Reference Position D-59
(7) Adjustment of the 1st/2nd (23 cpm copier only) Drawer Reference Position D-60
(8) Adjustment of the Paper Lifting Plate Springs (2nd Drawer): 23 cpm copier only D-61
(9) Adjustment of the Leading Edge Registration D-62
(10) Adjustment of the Image Leading Edge Erase Width D-66
(11) Adjustment of the Image Erase Lamp Position D-68
3-5. OTHER ADJUSTMENTS D-69
(1) Adjustment of the Scanner/Mirrors Carriage Position D-69
(2) Adjustment of the Gap Between the Doctor Blade and Sleeve Roller D-70
(3) Adjustment of the Original Size Detecting Board D-71
4. MISCELLANEOUS D-72
4-1. INSTALLATION OF THE PLUG-IN COUNTER MOUNTING BRACKET (OPTION) D-72

1 SERVICE INSTRUCTIONS

1-1. INSTRUCTIONS FOR HANDLING THE PWBs WITH MOS ICs

The following precautions must be observed when handling P.W. Boards with MOS (Metal Oxide Semiconductor) ICs.

During Transportation/Storage:
- During transportation or when in storage, new P.W. Boards must not be indiscriminately removed from their protective conductive bags.
- Do not store or place P.W. Boards in a location exposed to direct sunlight.
- When it becomes absolutely necessary to remove a Board from its conductive bag or case, always place it on its conductive mat in an area as free as possible from static electricity.
- Do not touch the pins of the ICs with your bare hands.

During Replacement:
- Before unplugging connectors from the P.W. Boards, make sure that the power cord has been unplugged from the outlet.
- When removing a Board from its conductive bag or conductive case, do not touch the pins of the ICs or the printed pattern. Place it in position by holding only the edges of the Board.
- Before plugging connectors into the Board, make sure that the power cord has been unplugged from the power outlet.

During Inspection:
- Avoid checking the IC directly with a multimeter; use connectors on the Board.
- Never create a closed circuit across IC pins with a metal tool.
- When it is absolutely necessary to touch the ICs and other electrical components on the Board, be sure to ground your body.

1-2. HANDLING OF THE PC DRUM

During Transportation/Storage:
- Use the specified carton whenever moving or storing the PC Drum.
- The storage temperature is in the range between –20°C and +40°C.
- In summer, avoid leaving the PC Drum in a car for a long time.

Handling:
- Ensure that the correct PC Drum is used.
- Whenever the PC Drum has been removed from the copier, store it in its container or protect it with a Drum Cloth.
- The PC Drum exhibits greatest light fatigue after being exposed to strong light over an extended period of time. Never, therefore, expose it to direct sunlight.
- Use care not to contaminate the surface of the PC Drum with oil-base solvent, fingerprints, and other foreign matter.
- Do not scratch the surface of the PC Drum.
- Do not apply chemicals to the surface of the PC Drum.
- Do not attempt to wipe clean the surface of the PC Drum.

If, however, the surface is contaminated with fingerprints, clean it using the following procedure.

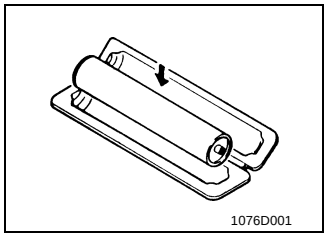

1. Place the PC Drum into one half of its container.

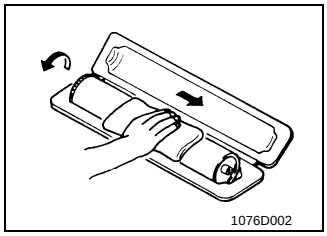

2. Gently wipe the residual toner off the surface of the PC Drum with a dry, Dust-Free Cotton Pad.

A. Rotate the PC Drum so that the area of its surface on which the line of toner left by the Cleaning Blade is present is facing straight up. Wipe the surface in one continuous movement from the rear edge of the PC Drum to the front edge and off the surface of the PC Drum.

B. Rotate the PC Drum slightly and wipe the newly exposed surface area with a CLEAN face of the Dust-Free Cotton Pad. Repeat this procedure until the entire surface of the PC Drum has been thoroughly cleaned.

✻ At this time, always use a CLEAN face of the dry Dust-Free Cotton Pad until no toner is evident on the face of the Pad after wiping.

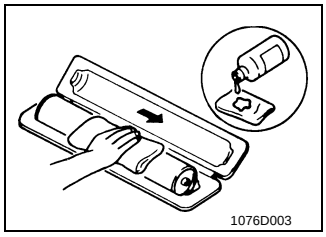

3. Soak a small amount of either ethyl alcohol or isopropyl alcohol into a clean, unused Dust-Free Cotton Pad which has been folded over into quarters. Now, wipe the surface of the PC Drum in one continuous movement from its rear edge to its front edge and off its surface one to two times.

✻ Never move the Pad back and forth.

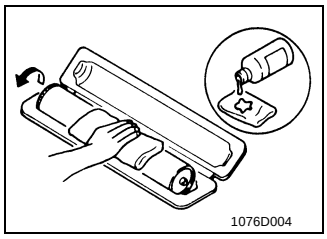

4. Using the SAME face of the Pad, repeat the procedure explained in the latter half of step 3 until the entire surface of the PC Drum has been wiped. Always OVERLAP the areas when wiping. Two complete turns of the PC Drum would be appropriate for cleaning.

NOTES

- *The Organic Photoconductor Drum is softer than CdS and Selenium Drums and is therefore susceptible to scratches.*
- *Even when the PC Drum is only locally dirtied, wipe the entire surface.*
- *Do not expose the PC Drum to direct sunlight. Clean it as quickly as possible even under interior illumination.*
- *If dirt remains after cleaning, repeat the entire procedure from the beginning one more time.*

Identification of Fuses

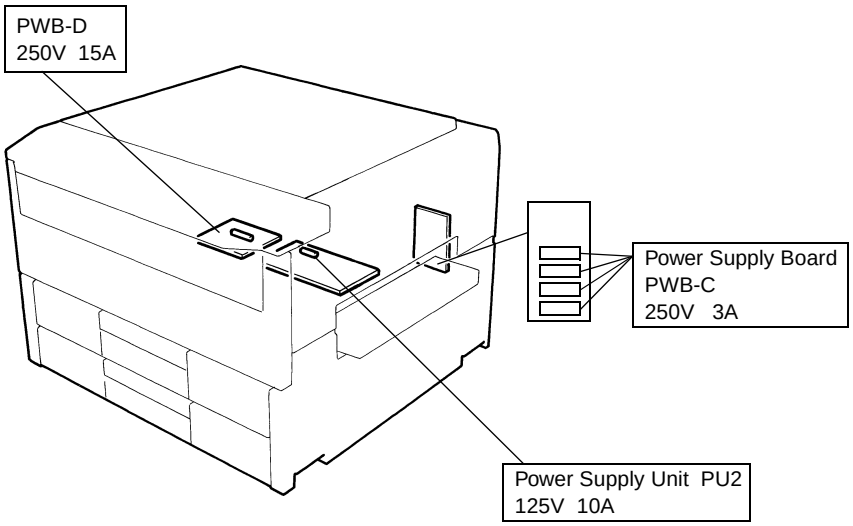

1171D001AA

1-3. PARTS WHICH MUST NOT BE TOUCHED

(1) Screws

Purpose of Application of Red Paint
Red paint is applied to the screws which cannot be readjusted, set, or reinstalled in he field. The basic rule is not to remove or loosen the screws to which red paint is applied. In addition, be advised that, if two or more screws are designated as those which must not be touched on a single part, only one representative screw may be marked with red paint.

(2) Variable Resistors on Board

Do not turn the variable resistors on boards for which no adjusting instructions are given in "ADJUSTMENT."

(3) Other Screws

Lower Pre-Image Transfer Guide Plate (2 screws)

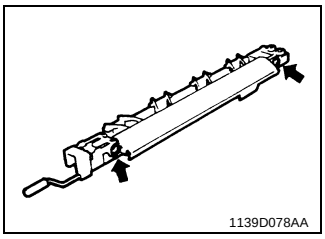

Lens Rail height setting screws (2)

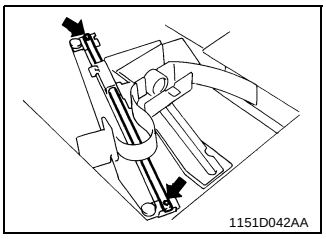

2 DISASSEMBLY/REASSEMBLY

2-1. DOORS, COVERS, AND EXTERIOR PARTS: IDENTIFICATION AND REMOVAL PROCEDURES

<23 cpm copier>

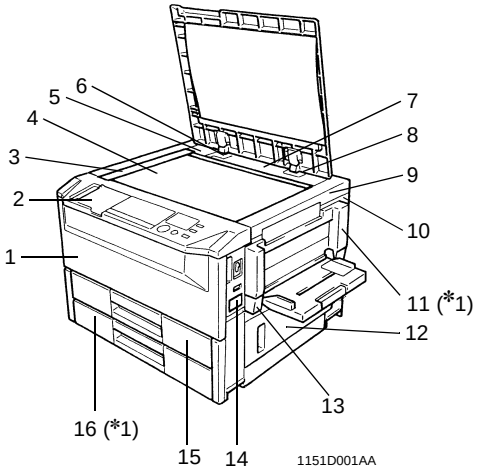

<15/18 cpm copier>

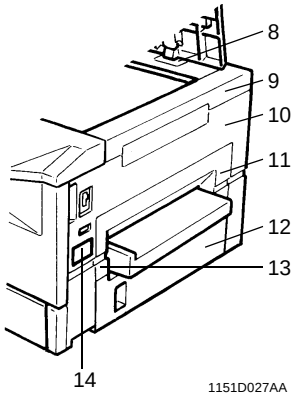

(*1: 23 cpm copier only)

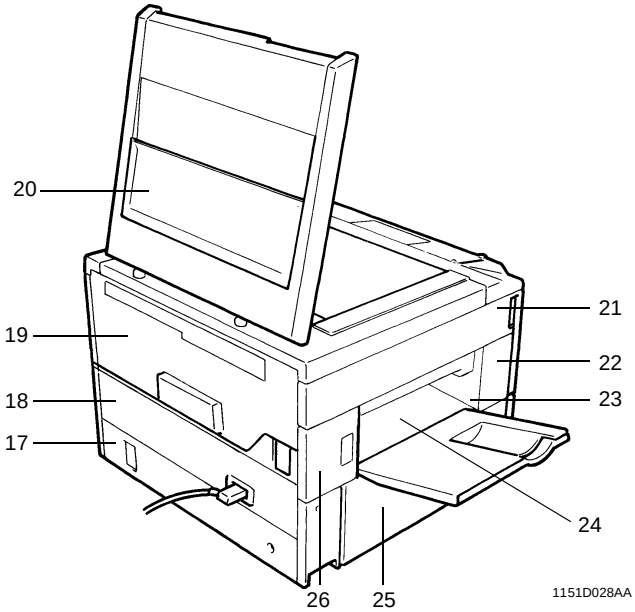

No.	Part Name	Removal Procedure
1	Front Door	Swing down No.1. → Remove one screw that secures the Belt. → Remove two screws that secure the Front Door (only on one side). → Slide the Door to the side from which the screws have been removed.
2	Control Panel	Swing down No.1. → Remove No.9. → Release and swing up the Upper Half of the copier. → Remove No.21. → Remove two screws that secure the control panel and loosen another five screws that secure the control panel.
3	Original Scales	Remove two screws that secure the Scales.
4	Original Glass	
5	Rear Upper Cover (Small)	Remove the Original Cover. → Release and swing up the Upper Half of the copier. → Remove the Screw Cover and one mounting screw of No.5.
6	Left Hinge Cover	Remove the Original Cover. → Remove one screw that secures the Left Hinge Cover.
7	Rear Upper Cover	Remove the Original Cover. → Remove No.6, 8 and 9. → Remove one screw that secures No.7.
8	Right Hinge Cover	
9	Upper Right Cover	
10	Right Cover	Remove No.11. → Remove No.9. → Remove two screws that secure No.10.
11	Middle Right Cover	Remove screws that secure No.11. (23 cpm copier: three/ 15/18 cpm copier: four).
12	Right Door	Open No.12 and remove it by lifting it up.
13	Multi Bypass Table Mounting Bracket *1	Remove two screws that secure the Multi Bypass Table Mounting Bracket.
14	Counter Cover	Remove No.14 by snapping if off.
15	1st Drawer	Slide out the Drawer and remove one screw that secures the Stopper at the rear left corner.
16	2nd Drawer *2	
17	Lower Rear Cover *2	Remove two screws that secure the Lower Rear Cover.
18	Rear Cover	Swing down No.1. → Release and swing up the Upper Half of the copier. → Remove two screws that secure the Rear Cover.
19	Upper Rear Cover	Swing down No.1. → Release and swing up the Upper Half of the copier. → Remove three screws that secure the Upper Rear Cover.
20	Original Cover	———

Remove the Original Cover by pulling it up.

No.	Part Name	Removal Procedure
21	Upper Left Cover	Swing down No.1. → Release and swing up the Upper Half of the copier. → Remove four screws that secure the Upper Left Cover.
22	Middle Front Left Cover	Swing down No.1. → Release and swing up the Upper Half of the copier. → Remove one screw that secures the Middle Front Left Cover.
23	Front Exit Cover	Swing down No.1. → Release and swing up the Upper Half of the copier. → Remove No.22. → Remove one screw that secures the Front Exit Cover.
24	Rear Exit Cover	Swing down No.1. → Release and swing up the Upper Half of the copier. → Remove No.26. → Remove one screw that secures the Rear Exit Cover.
25	Lower Left Cover	Remove four screws that secure the Lower Left Cover.
26	Middle Rear Left Cover	Swing down No.1. → Release and swing up the Upper Half of the copier. → Remove one screw that secures the Middle Rear Left Cover.

✻ 1: Multi Bypass Section: 15/18 cpm copier option
✻ 2: 18/23 cpm copier only

2-2. REMOVAL OF PWBs

- When removing a PWB, first go over “PRECAUTIONS FOR HANDLING THE PWBs” contained in SWITCHES ON PWBs and use the removal procedures given on the next page.
- Replacement of a PWB may call for readjustments or resetting of particular items.
- The removal procedures given on the next page omit the steps to unplug connectors and remove the PWB from the PWB support.

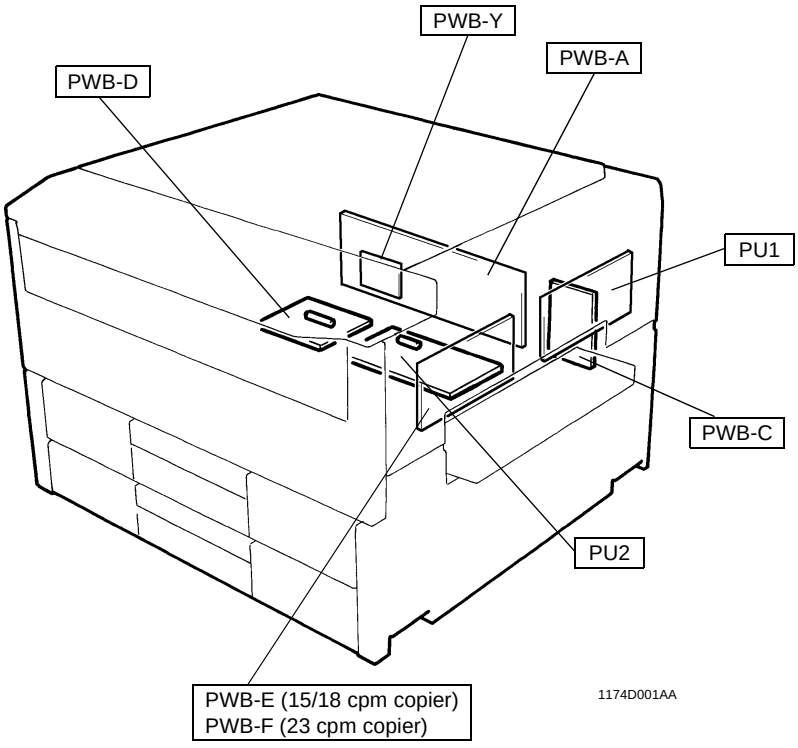

Symbol	Part Name	Removal Procedure
PWB-A	Master Board	Open 1. → Release and swing up the Upper Half of the copier. → Remove 19.
PWB-C	Power Supply Board	Open 1. → Release and swing up the Upper Half of the copier. → Remove 17 (18/23 cpm copier only), 18, and 19. → Remove four screws that secure the Power Supply Unit Cover.
PWB-D	Noise Filter Board	
PWB-E (15/18 cpm copier)	Motor Drive Board	Open 1 and 12. → Remove 9, 10, and 11.
PWB-F (23 cpm copier)	Motor Drive Board	Open 1. → Remove 11. → Remove 9 and 10. → Remove the Multi Bypass Unit.
PWB-H	AE Sensor Board	Remove 3 and 4. → Remove the optical cover.
PWB-P	Control Panel	Open 1. → Remove 9. → Release and swing up the Upper Half of the copier. → Remove 21. → Remove seven screws that secure Control Panel.
PWB-Y	RAM Board	Open 1. → Release and swing up the Upper Half of the copier. → Remove 19.
PU1	Power Supply Unit	<18/23 cpm copier> Open 1. → Remove 11. → Remove 9 and 10. → Remove the Multi Bypass Unit.
		<15 cpm copier> Open 1 and 12. → Remove 9, 10, and 11.
PU2	DC Power Supply Unit	Open 1. → Release and swing up the Upper Half of the copier. → Remove 17 (18/23 cpm copier only) and 18.
HV1	High Voltage Unit	Open 1. → Release and swing up the Upper Half of the copier. → Remove 19. → Remove PWB-A.
UN2 (18/23 cpm copier only)	Original Size Detecting Board	Remove 3 and 4. → Remove the optical cover.
UN3	ATDC Sensor	Open 1. → Release and swing up the Upper Half of the copier. → Take out the I/U. → Remove two screws that secure the Synchronizing Roller Guide Unit.

✻ Details of Readjustments/Resetting Involved In Replacement of PWB-Y, UN2 and UN3.

- When PWB-Y is replaced:
  Carry out Memory Clear and then make the Tech. Rep. Program, User's Choice, and Adjust settings again.
- When UN2 is replaced: (18/23 cpm copier only)
  Adjust the Original Size Detecting Board.
- When UN3 is replaced:
  Discard the developer which had been used until UN3 was replaced, charge the Developing Unit with fresh starter, and adjust ATDC.

2-3. BELT INSTALLATIONS

- Rear View

Drive/Suction Unit

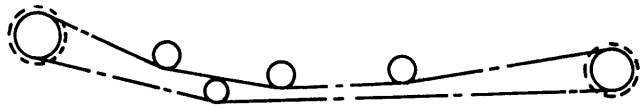

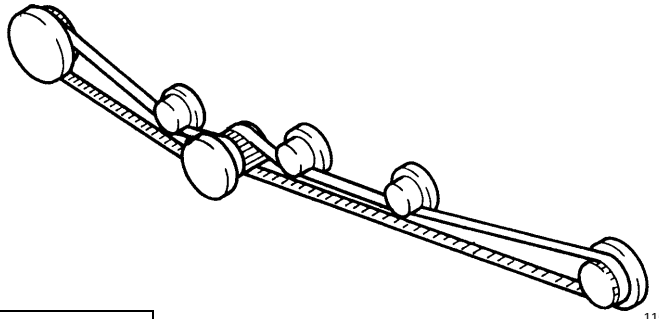

1151D052AB

Paper Take-Up Unit

<18/23 cpm copier>

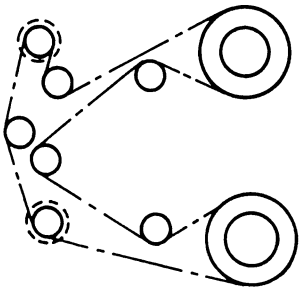

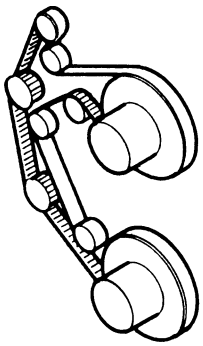

<15 cpm copier>

1151D050AA

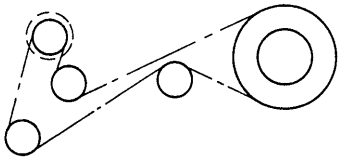

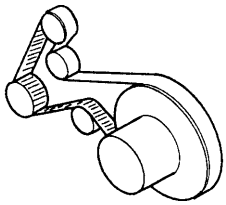

1142D005AA

2-4. PAPER TAKE-UP/TRANSPORT SECTIONS

(1) Removal of the Paper Take-Up Unit

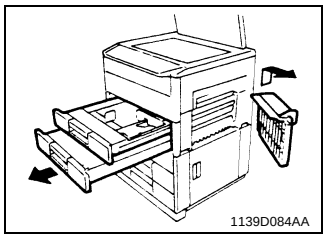

1. Remove the Multi Bypass Table. (15/18 cpm copier: OPTION) See p. D-15. (NO 1 ~ 7)
2. Slide out the 1st and 2nd (23 cpm copier only) Drawers.

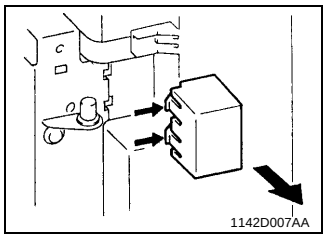

3. Press the tabs at the two places indicated by the arrow and, at the same time, remove the cover. (15/18 cpm copier only)

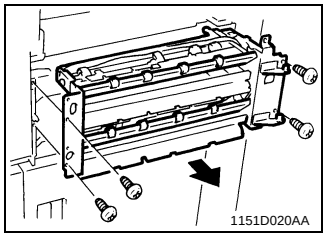

4. Remove screws and the Paper Take-Up Unit. (23 cpm copier: four screws/15/18 cpm copier: five screws)

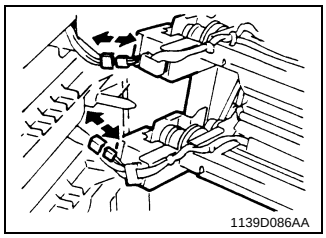

5. Unplug the connectors from the solenoids on the Paper Take-Up Unit. (23 cpm copier: two connectors/15/18 cpm copier: one connector)

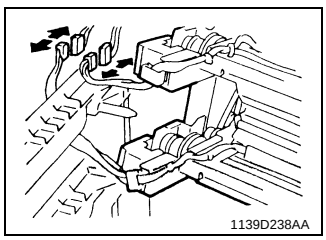

6. Remove the Rear and Rear Upper covers.
7. Remove the DC Power Supply Unit.
8. Remove the harness from the wiring saddle.
9. Unplug the connectors (23 cpm copier: two connectors/15/18 cpm copier: one connector).

(2) Removal of the Paper Take-Up Rolls

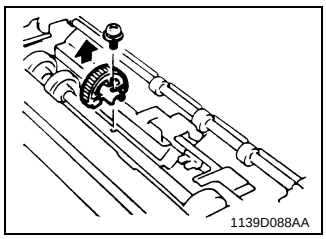

1. Remove one screw to remove the Paper Take-Up Roll.

(3) Cleaning of the Paper Take-Up Rolls

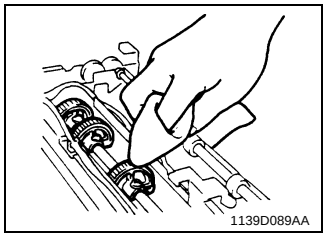

1. Remove the Paper Take-Up Unit from the copier.
2. Using a soft cloth dampened with alcohol, wipe clean the Paper Take-Up Rolls.

(4) Removal of the Suction Unit

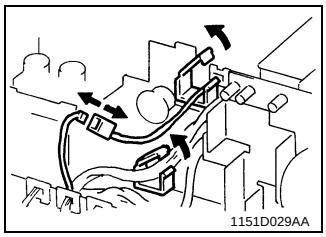

1. Remove the Fusing Unit. (See p. D-40.)
2. Unplug the Suction Fan connector and remove the wire from the clamp.

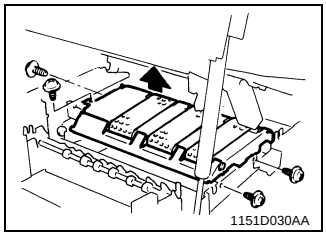

3. Remove four screws to remove the Suction Unit.

(5) Disassembly of the Suction Unit

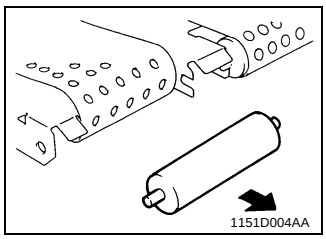

1. Remove the four Suction Drive Rolls and six bushings by pulling them in the direction of the arrow.

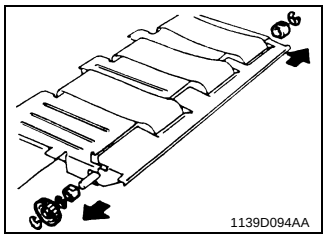

2. Snap off the three E-rings from the Suction Drive Unit.
3. Remove the gear and bushings.

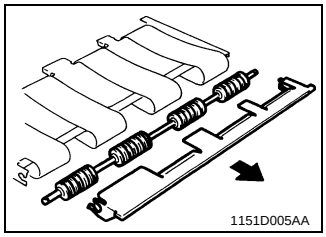

4. Remove the Pre-Fusing Guide Plate.
5. Remove the Suction Drive Unit.

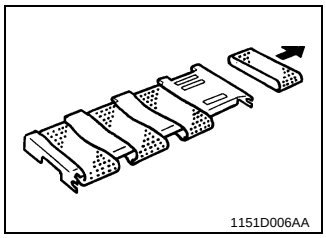

6. Remove the four belts.

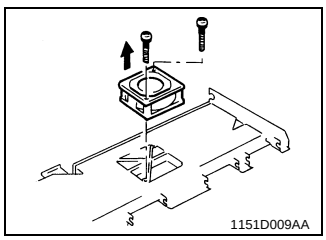

7. Remove the Suction Fan.

(6) Replacement of the Paper Lifting Springs (2nd Drawer): 23 cpm copier only

Remark

- The replacement springs are installed on the underside of the 2nd Drawer.

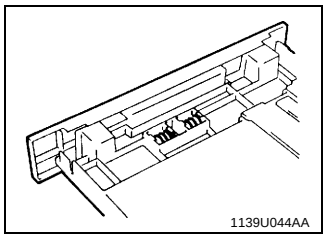

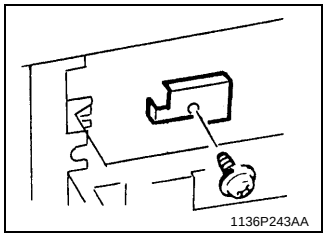

1. Remove the Stoppers of the 2nd Drawer and the 2nd Drawer.

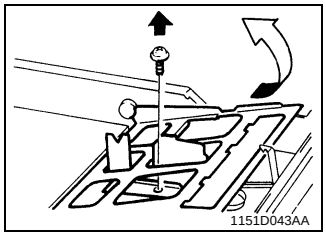

2. Remove one screw and the Edge Guide Unit.

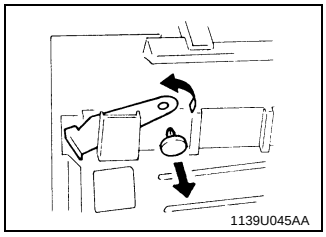

3. Remove the Front Separator Finger by removing its pin.

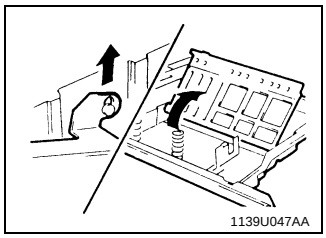

4. Raise the Paper Lifting Plate Unit and replace the Paper Lifting Springs. See p. D-61.

(7) Disassembly of the Multi Bypass Table (15/18 cpm copier: OPTION)

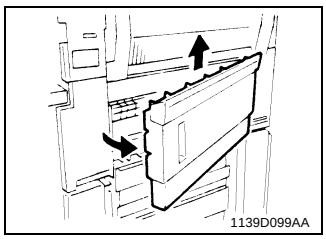
1139D099AA

1. Remove the Right Door.

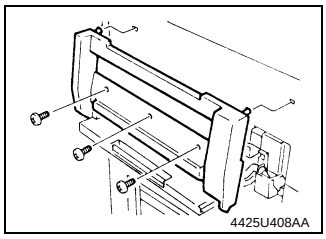
4425U408AA

2. Remove three screws and the Large Cover.

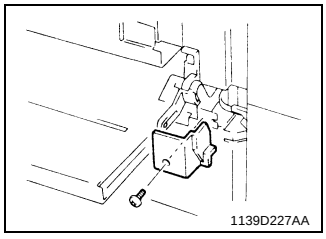
1139D227AA

3. Remove one screw and the Small Cover.

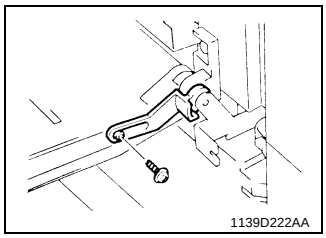
1139D222AA

4. Remove three screws and the Guide Lever Unit.

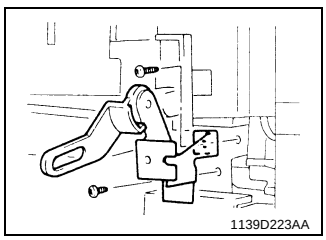
1139D223AA

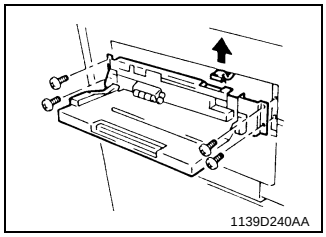

5. Remove four screws and the Multi Bypass Table.
6. Unplug the Multi Bypass Table connector.

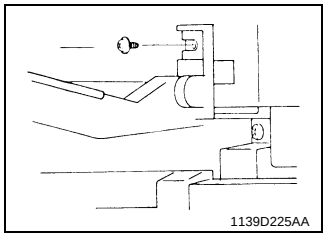

7. Remove one screw and the Multi Bypass Table.

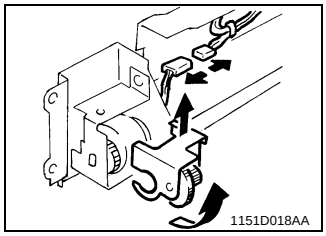

8. Unplug one connector.
9. Remove the Tension Unit.

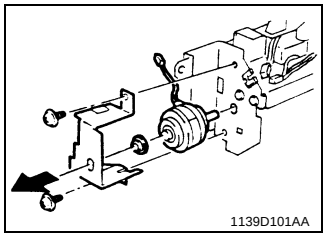

10. Remove two screws and the Clutch Mounting Bracket.

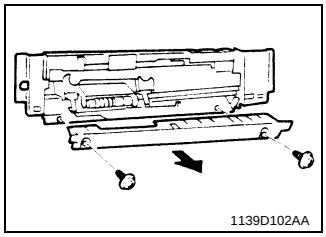

11. Remove two screws and the Lower Guide.

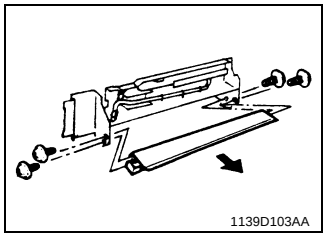

12. Remove four screws and the Separator Guide Plate Unit.

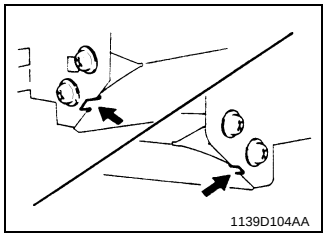

NOTE
When reinstalling the Separator Guide Plate Unit, press the parts shown on the left up against the copier frame (both at front and rear).

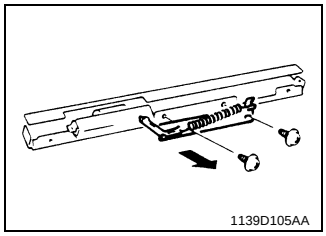

13. Remove two screws and the Lever.

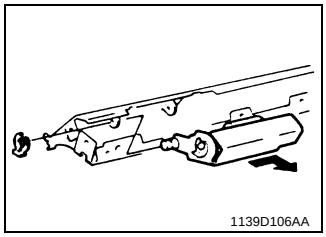

14. Snap off one C-clip and remove the Separator Unit.

NOTE
- *Please use tweezers when reinstalling the C-clip.*

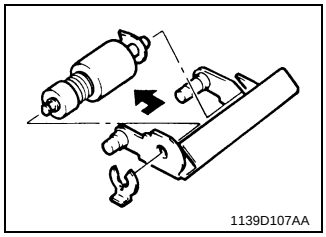

15. Snap off one C-clip and remove the Separator Roll Assy.

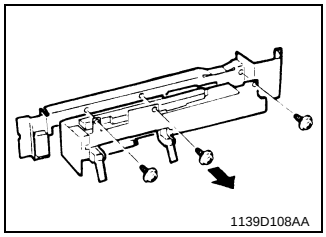
1139D108AA

16. Remove three screws and the Solenoid Mounting Bracket.

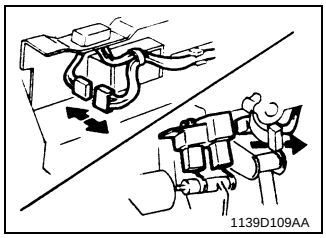
1139D109AA

17. Unplug one solenoid connector.
18. Unplug one photosensor connector and remove the harness from the clamp.

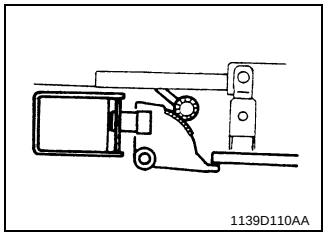
1139D110AA

NOTE
When reinstalling the Solenoid Mounting Bracket, make sure that the Solenoid is in the deenergized position.

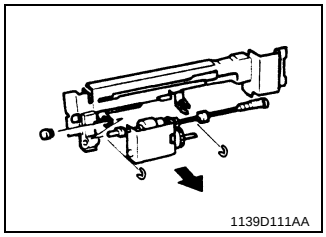
1139D111AA

19. Snap off the two C-clips to remove the Paper Take-Up Roll Unit.

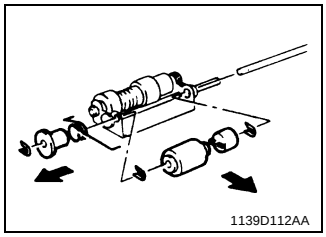
1139D112AA

20. Snap off the three C-clips to remove the Paper Feed Roll.

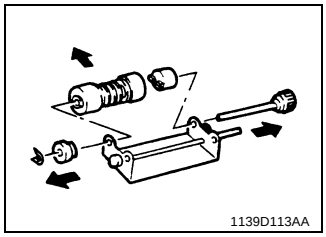

21. Snap off one C-clip and remove the Paper Take-Up Roll.

2-5. OPTICAL SECTION

(1) Removal of the Lens Drive Cable

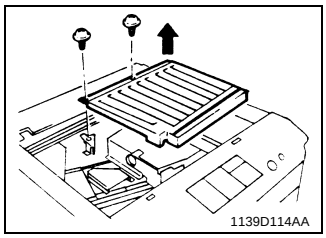

1. Remove two screws and the Optical Section Cover.

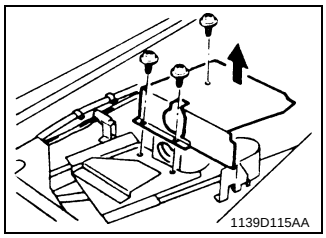

2. Remove three screws and the Lens Cover.

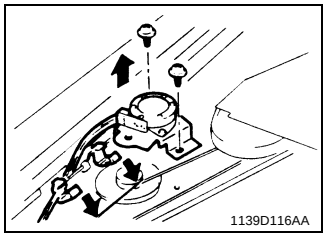

3. Remove two screws, two clamps and the Lens Motor Unit.

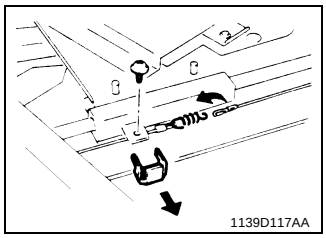

4. Remove one screw and the Cable Fixing Bracket.
5. Remove the spring.

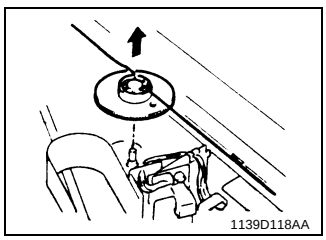

6. Remove the Cable Drive Gear and the Lens Drive Cable.

(2) Winding of the Lens Drive Cable

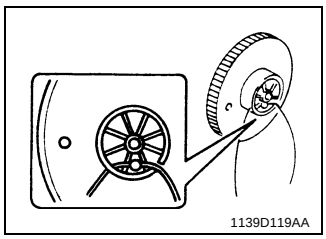

1. Hold the Cable Drive Gear in position with its Bead at the bottom.

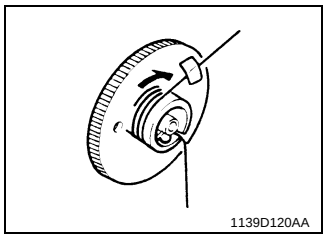

2. Wind the shorter length of the Cable three turns clockwise around the Cable Drive Gear, working from the back to the front side. Then tape it.

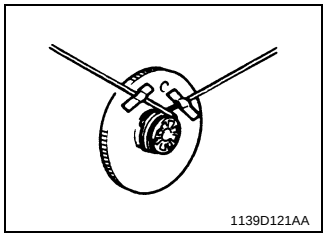

3. Wind the longer length of the Cable five turns counterclockwise around the Cable Drive Gear, working from the front to back side. Then tape it.

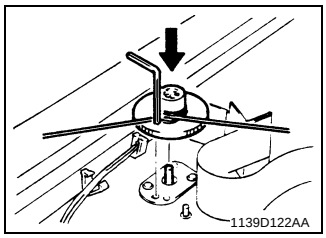

4. Slide the Cable Drive Gear onto its shaft and insert a wrench into the hole to position the Cable Drive Gear.

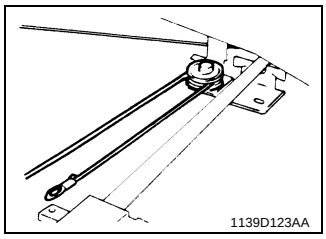

5. Pass the longer length of the Cable through the U-shaped hole in the Light Blocking Plate and wind it around the Pulley farther away from the Cable Drive Gear.

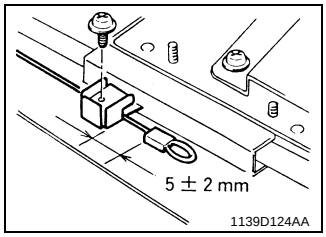

6. Temporarily secure the longer length of the Cable to the Cable Fixing Bracket, ensuring a distance of 5 ± 2 mm for the dimension shown on the left.

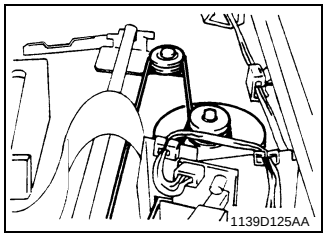

7. Wind the shorter length of the Cable around the Pulley which is nearer to the Cable Drive Gear.

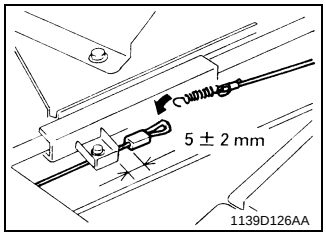

8. Hook the spring onto the shorter length of the Cable and pull it to hook onto the longer length of the Cable.
9. Check that the dimension noted in step 6 above measures 5 ± 2 mm. Then, secure the Cable Fixing Bracket.
10. Remove the wrench and peel off the two pieces of tape.

(3) Removal of the Scanner Drive Cable

(23 cpm copier)

- Remove the Original Cover, Original Scales, and Original Glass.
- Remove the Middle Right, Upper Right, Right, Upper Left, and Upper Rear Covers.
- Remove the Left and Right Hinge Covers, Rear Upper Cover (Small), and Rear Upper Cover.

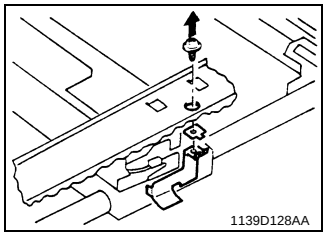

1. Align the Scanner with the rectangular hole in the upper copier frame and remove the screw from the Scanner Fixing Bracket.
2. Remove the Fixing Bracket.

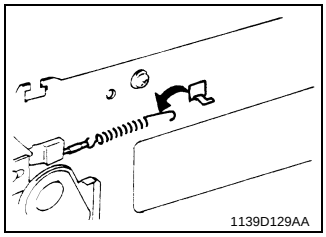

3. Unhook the spring and remove the length of the cable on the right (looking at the copier from the rear).

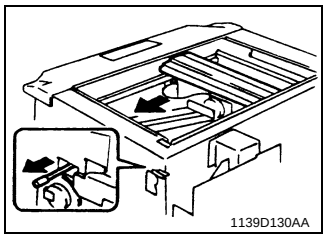

4. Move the 2nd/3rd Mirrors Carriage toward the Scanner Drive Gear so that the cable slacks off and then remove the length of the cable on the left (looking at the copier from the rear).
5. Remove Master Board PWB-A (four screws).

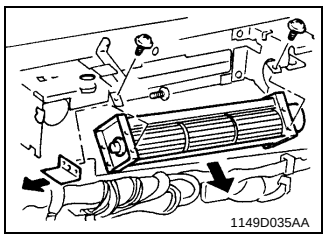

6. Remove Optical Section Cooling Fan Motor M2 (two screws).
7. Remove the ADF fixing bracket (one screw).

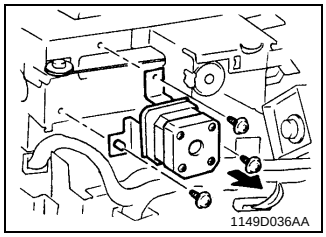

8. Remove Scanner Motor M4 (three screws).

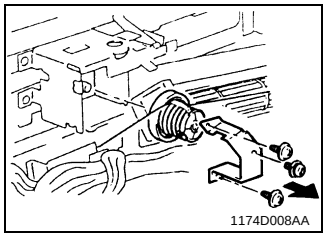

9. Snap off the Support Plate and remove the Scanner Drive Pulley.

(15/18 cpm copier)

- Remove the Original Cover, Original Scales, and Original Glass.
- Remove the Middle Right, Upper Right, Right, Upper Left, and Upper Rear Covers.
- Remove the Left and Right Hinge Covers, Rear Upper Cover (Small), and Rear Upper Cover.

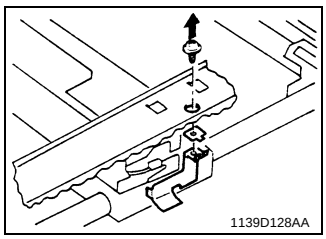

1. Align the Scanner with the rectangular hole in the upper copier frame and remove the screw from the Scanner Fixing Bracket.
2. Remove the Fixing Bracket.

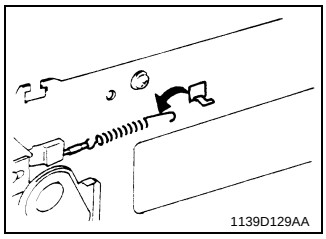

3. Unhook the spring to remove the shorter length of the Cable.

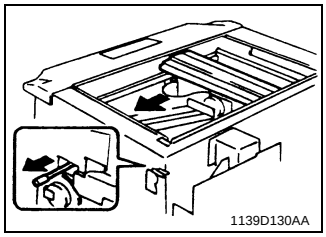

4. Move the 2nd/3rd Mirrors Carriage toward the Scanner Drive Gear so that the cable slacks off and then remove the longer length of the Cable.
5. Remove four screws and PWB-A.

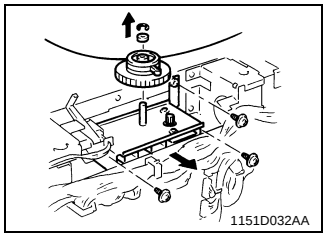

6. Remove three screws and the Scanner Motor Mounting Bracket.
7. Snap off one E-ring and remove the Scanner Drive Gear.

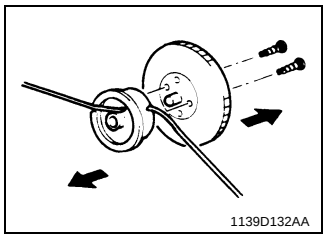

8. Remove two screws and the Pulley.
9. Remove the Cable.

(4) Winding of the Scanner Drive Cable

(23 cpm copier)

Remark

Whenever the Scanner Drive Cable has been rewound, be sure to make the “Adjustment of the Scanner/Mirrors Carriage Position.” See p. D-69.

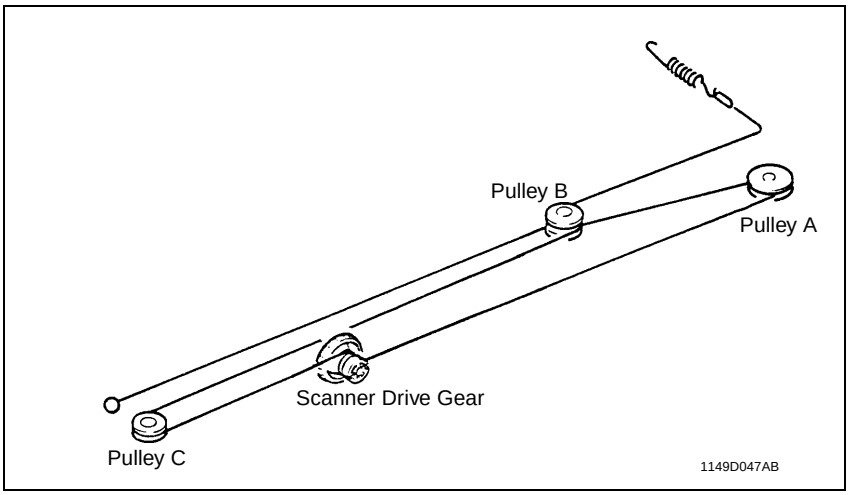

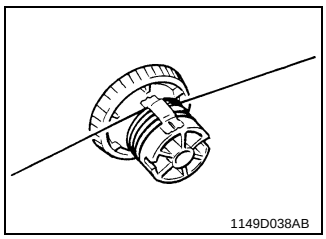

1. (With reference to the center of the entire length of the cable) Wind one length of the cable 5 times counterclockwise around the Pulley, starting with the end of the D-cut on the pulley shank and working from the front to the back side. Then, secure the cable with tape.

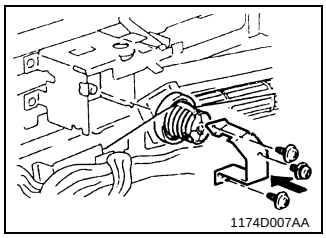

2. Mount the Cable Drive Pulley on the Pulley Shaft and fit the Support Plate.

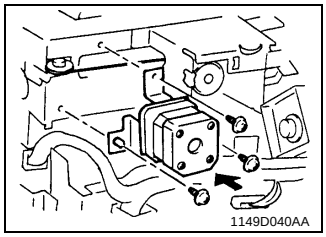

3. Fit the belt in position and secure Scanner Motor M4 (three screws).

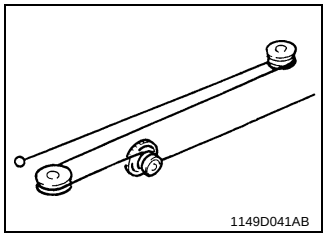

4. Hook the length of cable on the left (looking at the copier from the rear), around Pulleys C and B and secure it to the frame.

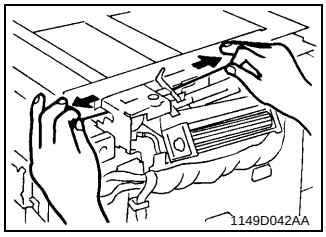

5. Peeling off the tape, pull the length of cable on the right (looking at the copier from the rear) and hook it onto Pulleys A and B.

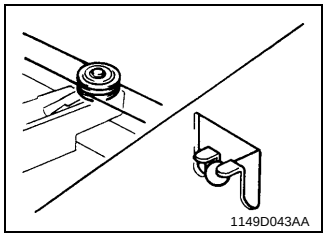

NOTE

- *Hook the length of cable on the left (looking at the copier from the rear) onto the lower groove in Pully B. (Fit the round terminal as illustrated on the left.)*
- *Hook the length of cable on the right (looking at the copier from the rear) onto the upper groove in Pulley B.*

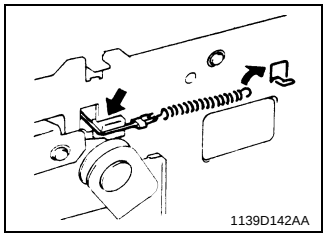

6. Fit the cable into the groove in the cable guide and hook the spring.
7. Mount PWB-A (four screws).

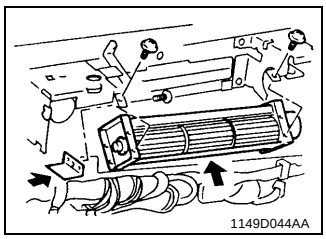

8. Fit the ADF fixing bracket (one screw).
9. Mount M2 (two screws).

(15/18 cpm copier)

Remark

Whenever the Scanner Drive Cable has been rewound, be sure to make the “Adjustment of the Scanner/Mirrors Carriage Position.” See p. D-69.

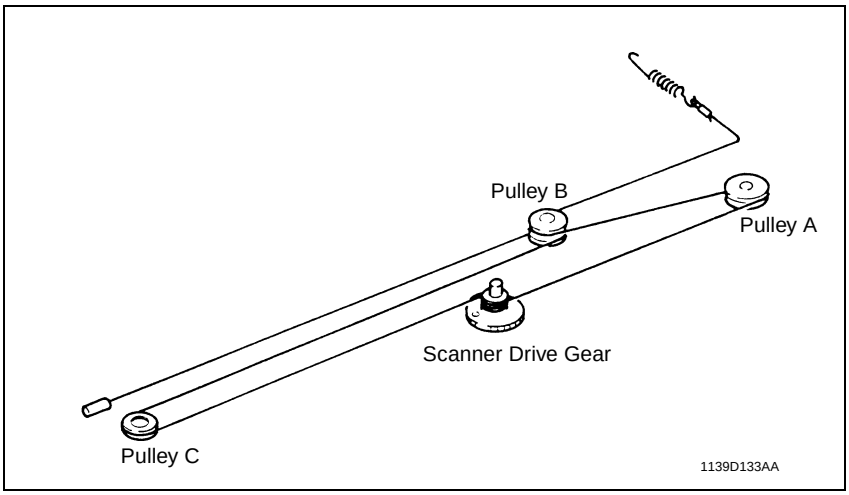

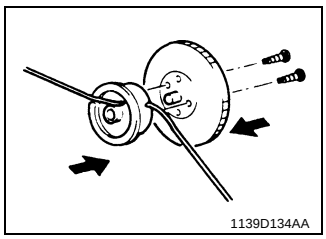

1. Fit the Pulley to the Scanner Drive Gear using two screws.

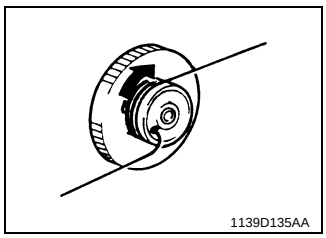

2. Wind the shorter length of the Cable 2 turns clockwise around the Pulley, working from the back to front side.

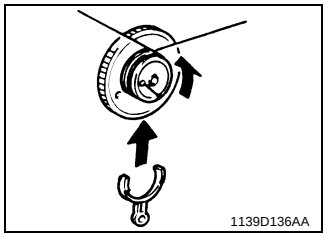

3. Wind the longer length of the Cable 5-3/4 turns counterclockwise around the Pulley, working from the front to back side. Then, slip the Cable Holding Jig onto the Pulley.

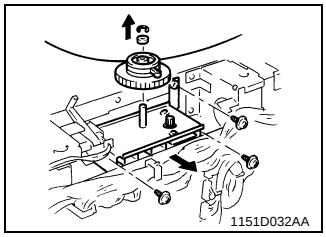

4. Fit the Scanner Drive Gear onto the Scanner Motor Mounting Bracket using one E-ring.
5. Secure the Scanner Motor Mounting Bracket to the frame using three screws.

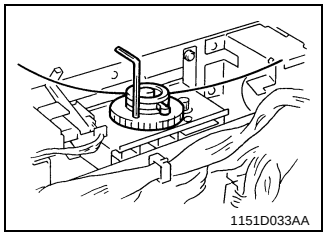

6. Insert a wrench into the holes in the Scanner Drive Gear and the frame to position the Gear.

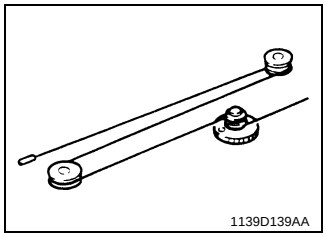

7. Wind the longer length of the Cable around Pulleys C and B and then secure it to the frame.

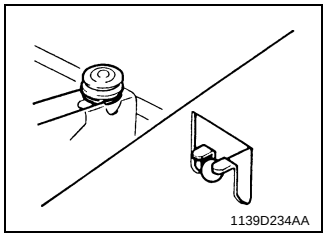

NOTE
Wind the longer length of the Cable around the lower groove in Pulley B (of the two grooves). Position the terminal of the Cable as illustrated on the left.

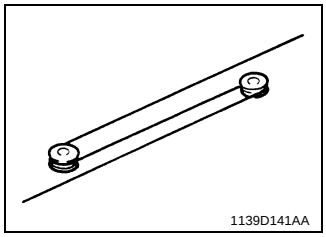

8. Wind the shorter length of the Cable around Pulleys A and B.

NOTE
Wind the shorter length of the Cable around the upper groove in Pulley B (two grooves).

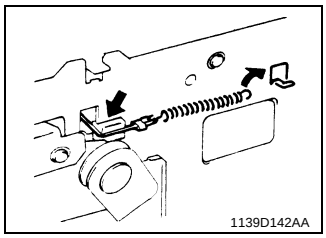

9. Fit the Cable into the groove in the Wire Guide and hook the spring.
10. Remove the wrench and Cable Holding Jig.

(5) Removal of the Scanner

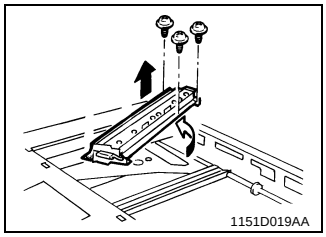

1. Turn the Scanner Drive Gear to move the Scanner to the right-hand side of the copier. Then, remove three screws and the Scanner.

(6) Cleaning of the Exposure Lamp

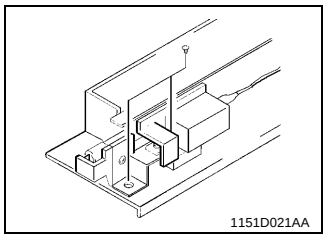

1. Remove two screws and the Exposure Lamp Terminal.
2. Slide out the Exposure Lamp.

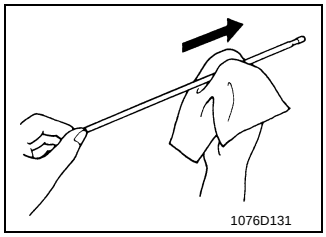

3. Using a soft cloth dampened with alcohol, clean the Lamp by wiping its surface gently in one direction.
4. Clean the Lamp Reflector.

NOTE
When reinstalling the Lamp, use care not to allow the protruding navel of the Lamp to hit against the Lamp Reflector and that the protruding navel points toward the opening in the Lamp Reflector.

(7) Cleaning of the 1st/2nd/3rd Mirrors

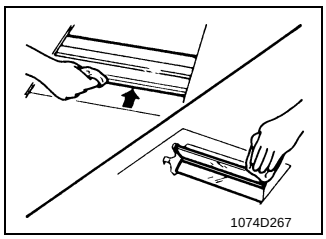

1. Turn the Scanner Drive Gear to move the Scanner away from the Mirrors. Then, wipe clean the 1st/2nd/3rd Mirrors with a soft cloth.

NOTE
An alcohol-dampened cloth may be used if the Mirror is seriously contaminated.

(8) Cleaning of the Lens and 4th Mirror

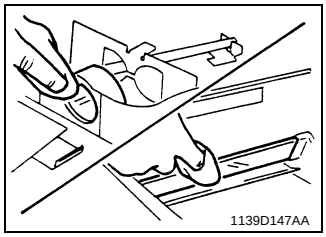

1. Gently dust off the surface of the Lens and 4th Mirror by using a dry soft cloth.

NOTE
An alcohol-dampened cloth may be used if the Lens or Mirror is seriously contaminated.

(9) Cleaning of the Optical Section Cooling Fan Filter (15/18 cpm copier only)

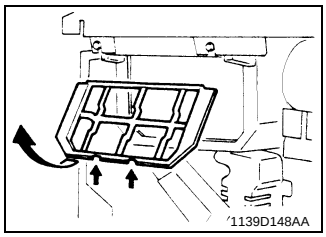

1. Unhook the Fan Cover at the bottom by slightly raising and, at the same time pulling, the two catches on the bottom.

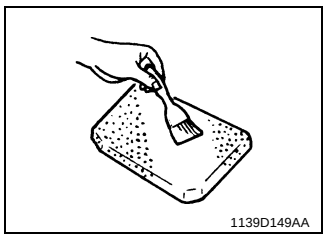

2. Clean the Filter with a brush or a vacuum cleaner.

2-6. IMAGING UNIT

(1) Disassembly, Cleaning, Replacement and Starter Changing of the Imaging Unit

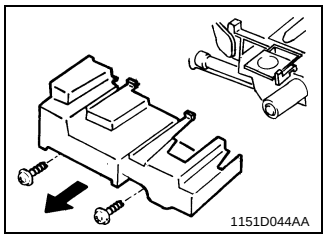

1. Remove the Imaging Unit from the copier.
2. Remove two screws and the Imaging Unit Cover.

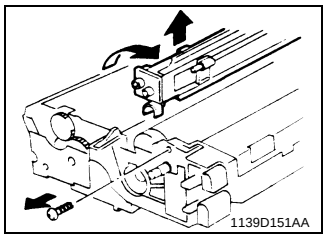

3. Remove one screw and the PC Drum Charge Corona Unit.

Replacement of the PC Drum

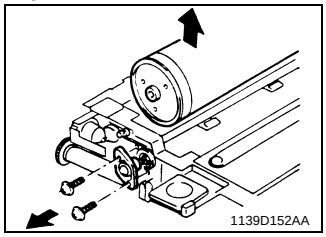

4. Remove two screws and one Drum Pin to remove the PC Drum.

NOTE
Whenever the PC Drum has been replaced, be sure to make the "Adjustments of the Optimum Exposure Setting in the Manual and Auto Mode." See pp. D-55 to D-56.

Replacement of the Toner Scattering Prevention Plate

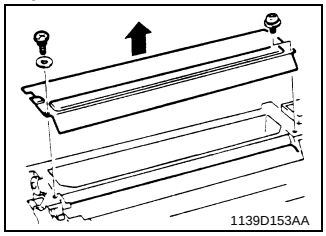

5. Remove one screw, one shoulder screw and the Toner Scattering Prevention Plate.

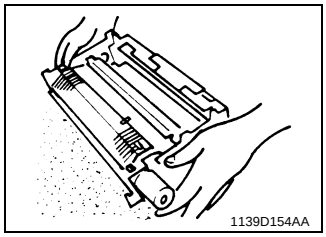

6. Tilt the Developing Unit to remove the developer.

Replacement of the Cleaning Blade

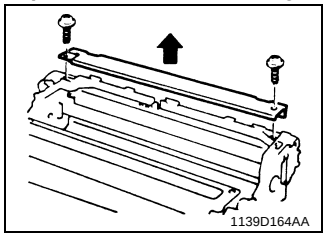

7. Remove two screws and the Lid.

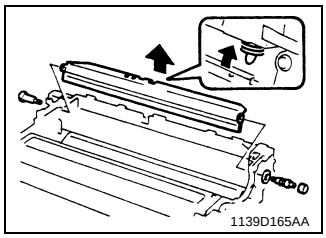

8. Remove the spring.
9. Remove two screws, one spring, one cap and the Cleaning Blade. Replace it with a new one.

NOTE
When the Cleaning Blade has been replaced, apply toner to the entire surface of the new Cleaning Blade.

Applying Toner to Cleaning Blade

Apply toner to the entire surface of the Cleaning Blade.
(Do not forget to coat the surfaces on both ends.)

↓

Install the PC Drum.

↓

Apply a thin coat of toner to the PC Drum.

↓

Turn the PC Drum 1/2 turns backward, then turn it one complete turn forward.

Cleaning of the PC Drum Paper Separator Fingers

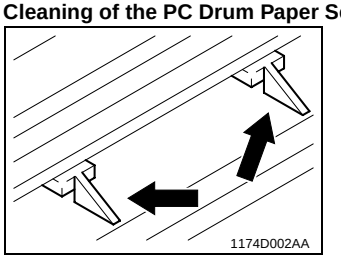

10. Using a soft cloth dampened with alcohol, wipe clean the Paper Separator Fingers.

NOTE
Clean the Paper Separator Fingers carefully as its tip is easy to bend.

Cleaning of the Ds Positioning Collars

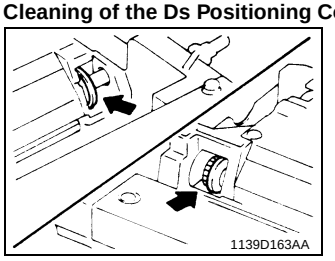

11. Using a soft cloth dampened with alcohol, wipe clean the Ds Positioning Collars.

Cleaning of the Paper Dust Remover

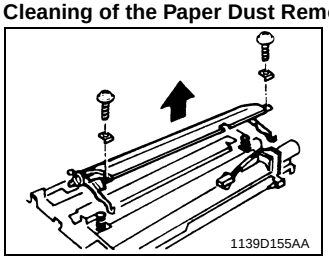

12. Remove two screws, two compression coil springs and the Synchronizing Roller Unit.

NOTE
When removing the Synchronizing Roller Unit, use care not to lose the compression coil springs.
At reinstallation, fit the close-coiled end of the springs to the bosses on the Imaging Unit.

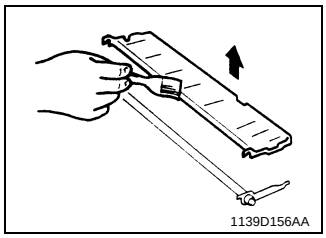

13. Remove the Synchronizing Roller.
14. Using a brush, whisk the dust and dirt off the Filter.

Replacement of the Toner Antispill Mylar

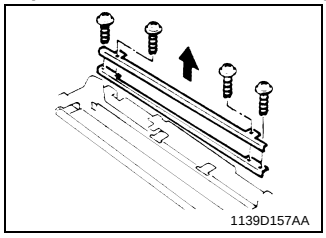

15. Remove two screws and the Bias Seal.
    (No Bias Seals are mounted in the copiers for the U.S.A., Canada, and Europe.)
16. Remove two screws and the Toner Antispill Mylar and replace the Mylar.

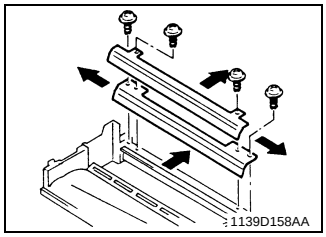

NOTE
At reinstallation, press the Toner Antispill Mylar up against the Imaging Unit Housing and the rear side of the copier (in the directions of the arrows) and press the Bias Seal up against the Imaging Unit Housing and the front side of the copier (in the directions of the arrows).

Cleaning of the Upper Pre-Image Transfer Guide Plate

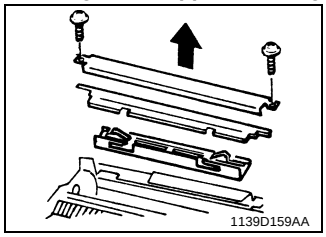

17. Remove two screws and the Upper Pre-Image Transfer Guide Plate.

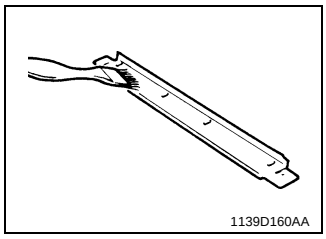

18. Using a brush, whisk toner and dust off the surface of the Upper Pre-Image Transfer Guide Plate.

Cleaning of the Magnet Roller Lower Filter

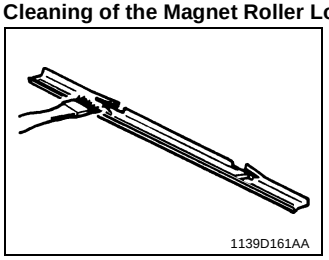

19. Using a brush, whisk toner and dust off the Magnet Roller Lower Filter.
(No Magnet Roller Lower Filters are mounted in the copiers for the U.S.A., Canada, and Europe.)

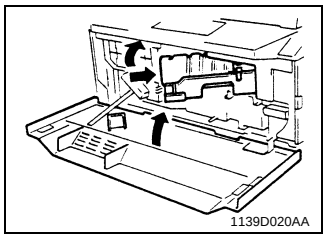

20. Refit the parts to the Imaging Unit and reinstall the Imaging Unit in the copier.
21. Charge fresh starter and make the ATDC adjustment. See p. D-57.

(2) Cleaning of the Main Erase Lamp

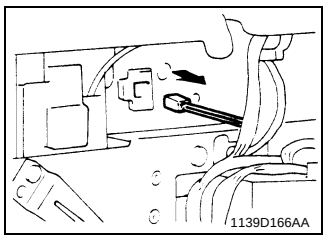

1. Remove four screws and PWB-A.
2. Remove three screws and HV1.
3. Unplug the connector of the Main Erase Lamp.

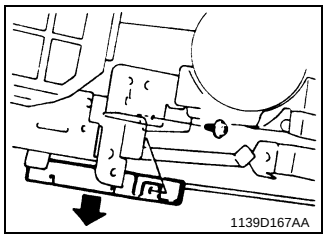

4. Remove the Imaging Unit.
5. Pull out the Toner Bottle Holder to the front.
6. Remove one screw and the Main Erase Lamp.

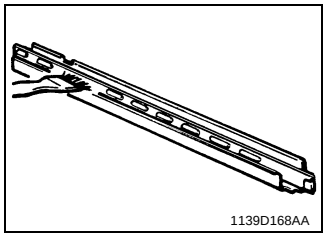

7. Using a brush or a soft cloth dampened with alcohol, clean the Erase Lamp.

NOTE
Do not touch the Lamp with bare hands.

(3) Cleaning of the Image Erase Lamp

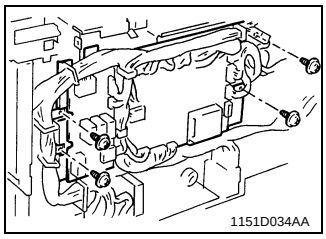

1. Remove four screws and PWB-A.

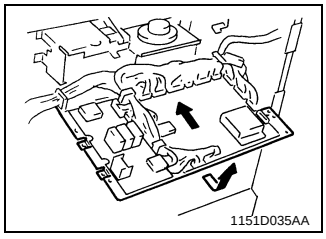

2. Insert PWB-A into the copier to secure it.

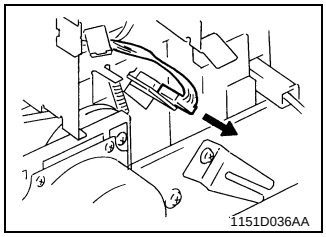

3. Go to the rear of the copier and unplug the connector of Image Erase Lamp.

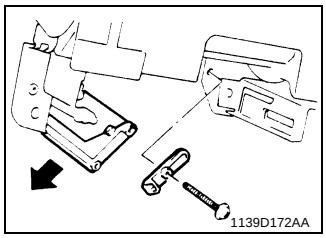

4. Remove the Imaging Unit.
5. Remove one screw and the Image Erase Lamp.

NOTE
When removing the Erase Lamp, use care not to lose the pressure spring in the rear.

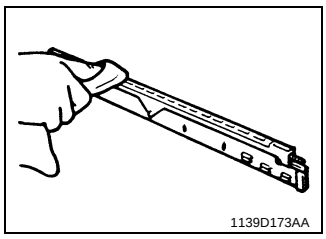

6. Using a brush or a soft cloth dampened with alcohol, clean the Erase Lamp.

NOTE
After the Erase Lamp has been cleaned, make the "Adjustment of the Image Erase Lamp Position." See p. D-68.

2-7. PC DRUM CHARGE CORONA/IMAGE TRANSFER CORONA UNIT

(1) Cleaning of the PC Drum Charge Corona Housing

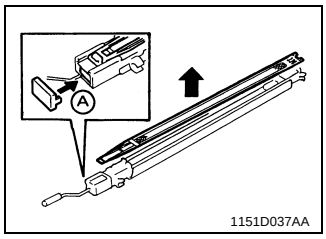

1. Remove the Imaging Unit.
2. Remove one screw and PC Drum charge Corona Unit.
3. Press the Mesh Holder on the front of the Corona Unit in the direction of arrow A to remove the Grid Mesh.

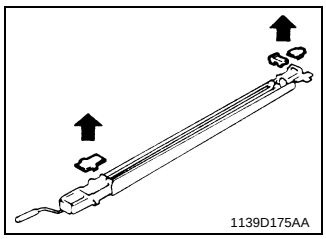

4. Remove the Cleaning Pad Cover.
5. Remove the End Caps from the front and rear ends of the Unit.

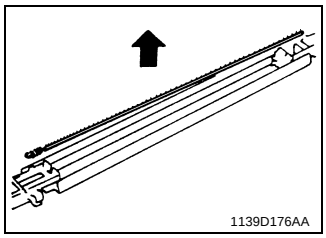

6. Remove the Comb Electrode.

NOTE
Use care not to deform the Electrode. When removing it, first snap off its spring end.

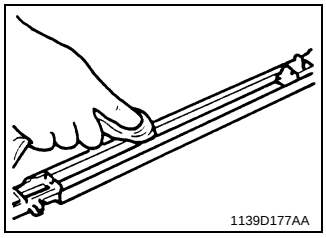

7. Using a soft cloth dampened with alcohol, wipe the Housing clean of dirt.

(2) Cleaning of the PC Drum Charge Corona Grid Mesh

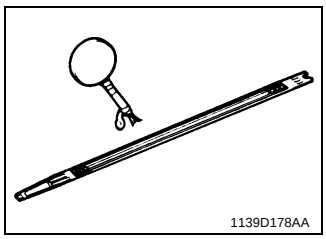

1. Blow all foreign matter off the Grid with a blower brush.

NOTE
If the blower brush is not effective in cleaning the Grid, use a soft cloth dampened with alcohol to clean serious contamination.

(3) Cleaning of the Comb Electrode

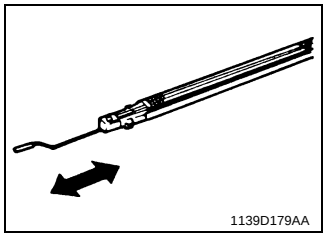

1. Clean the Comb Electrode using the Corona Unit Cleaning Lever.

(4) Cleaning of the Image Transfer/Paper Separator Coronas Wires

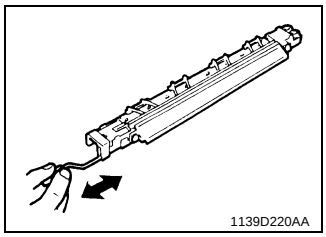

1. Clean the Image Transfer Corona Wire using the Corona Wire Cleaning Lever.

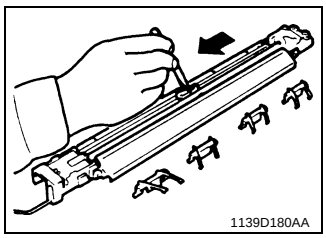

2. Remove the four Paper Guides.
3. Dampen a soft cloth with alcohol, hold it with a pair of tweezers, and wipe the Paper Separator Corona Wire gently in one direction.
(Go from the hook to spring end.)

(5) Cleaning of the Image Transfer/Paper Separator Coronas Housing

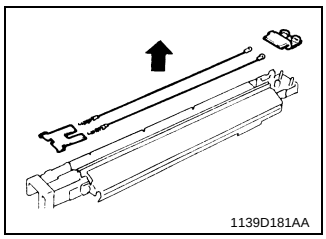

1. Remove the four Paper Guides.
2. Remove the two End Caps.
3. Remove the Image Transfer and Paper Separator Corona Wires.

NOTE
When removing the Wire, unhook the spring end first and use care to prevent break and deformation. (Use a pair of tweezers)
Keep the Corona Wire Cleaning Lever (for the Image Transfer Corona) pressed all the way back in. Do not attempt to remove the Lower Pre-Image Transfer Guide Plate as it has been adjusted for correct height.

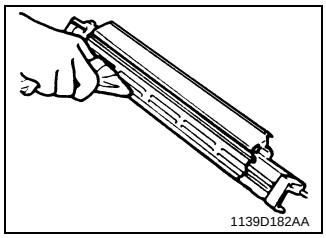

4. Using a soft cloth dampened with alcohol, wipe the Housing clean of dirt.

(6) Cleaning of the Lower Pre-Image Transfer Guide Plate

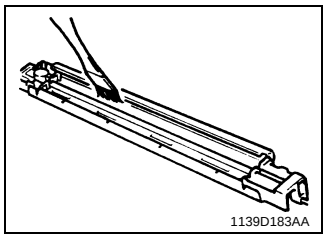

1. Using a brush, whisk dust off the Lower Pre-Image Transfer Guide Plate.

(7) Replacement of the Ozone Filter

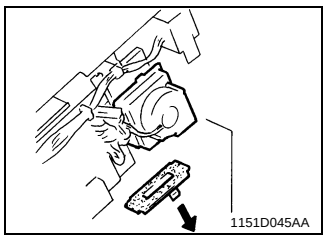

1. Press the Filter Cover Bracket in the direction of the arrows and pull it off.
2. Remove the Filter and replace it with a new one.

2-8. FUSING UNIT

(1) Removal of the Fusing Unit

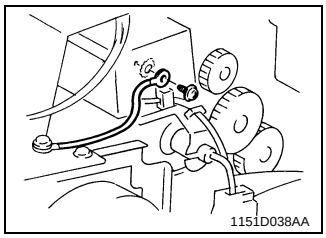

1. Remove one screw and the Ground Wire of the Fusing Unit.

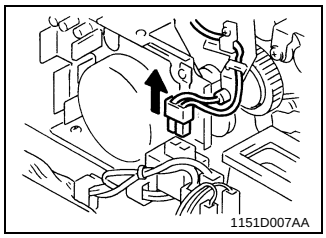

2. Unplug the Fusing Heater Lamp connector and remove the wires from the clamp.

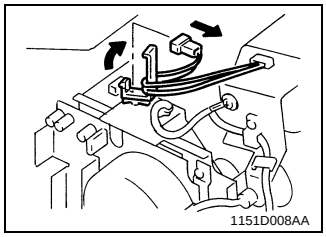

3. Unplug the Fusing Thermistor connector and remove the wires from the two clamps.

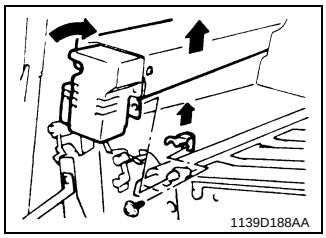

4. Remove one screw and the Fusing Unit Locking Plate.
5. Turning it in the direction of the arrow, remove the Fusing Unit.

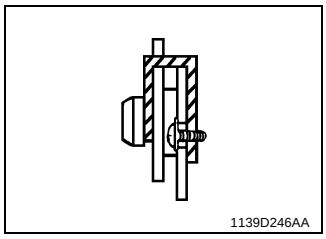

NOTE
When reinstalling the Fusing Unit, install the Locking Plate as illustrated on the left.

(2) Cleaning of the Pre-Fusing Guide Plate

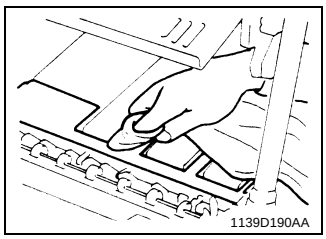

1. Using a soft cloth dampened with alcohol, wipe clean the Guide Plate.

(3) Removal of the Upper Fusing Roller

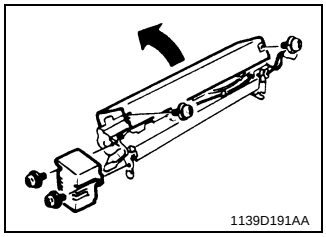

1. Remove two screws and the Fusing Unit Front Cover.
2. Remove two screws and the Fusing Unit Upper Cover.

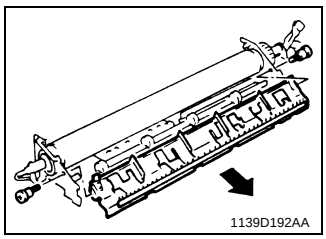

3. Remove two screws and the Upper Paper Separator Fingers Unit.

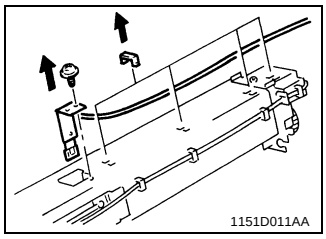

4. Remove four Cord Holders of the Fusing Thermistor.
5. Remove one screw and the Fusing Thermistor.

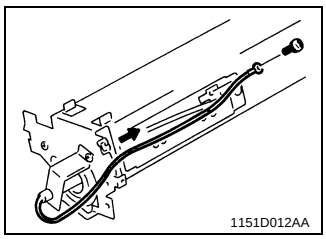

6. Remove the screw and clamp that secure the Lamp harness at the front of the copier.

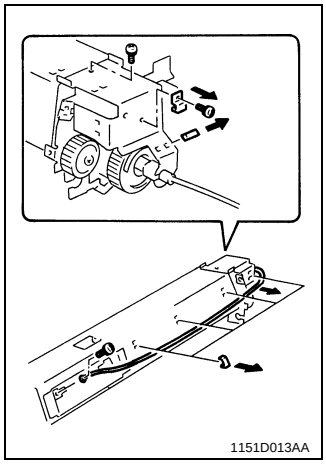

7. Remove the rear lamp harness and harness clamp (six).
8. Remove the mounting bracket (one screw).

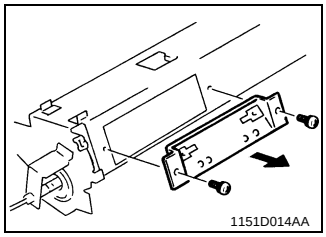

9. Remove the Fusing Thermoswitch (two screws).

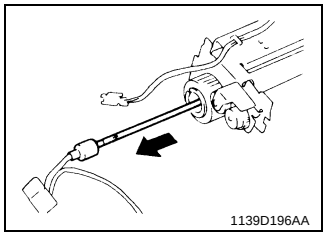

10. Slide out the Fusing Heater Lamp.

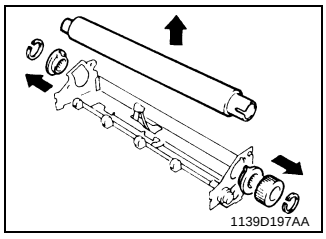

11. Remove two C-clips.
12. Remove one spur gear.
13. Remove two bushings.
14. Remove the Upper Fusing Roller.

(4) Cleaning of the Upper Fusing Roller

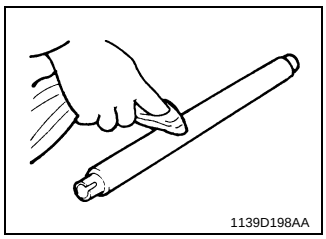

1. Using a soft cloth dampened with alcohol or silicone oil, wipe clean the Upper Fusing Roller.

(5) Cleaning of the Upper Paper Separator Fingers

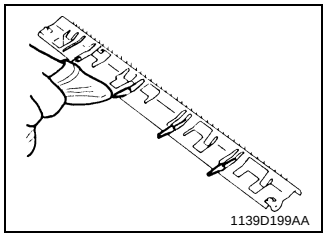

1. Using a soft cloth dampened with alcohol or silicone oil, wipe clean the Upper Separator Fingers.

(6) Cleaning of the Fusing Thermistor

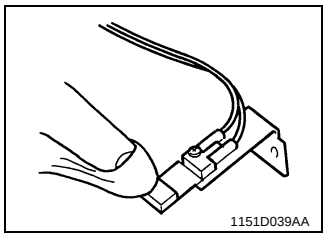

1. Remove one screw to remove the Fusing Thermistor.
2. Using a soft cloth dampened with alcohol or silicone oil, wipe clean the Thermistor.

(7) Removal of the Lower Fusing Roller

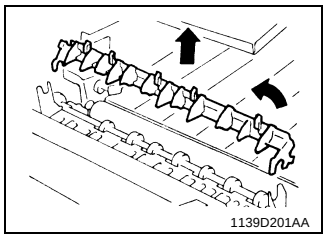

1. Turning it in the direction of the arrow, remove the Lower Separator Fingers Unit.

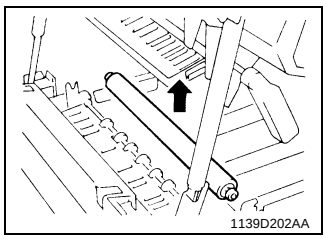

2. Remove the Lower Fusing Roller.

(8) Cleaning of the Lower Fusing Roller

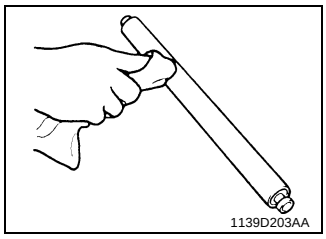

1. Using a soft cloth dampened with alcohol or silicone oil, wipe clean the Lower Fusing Roller.

(9) Cleaning of the Lower Paper Separator Fingers

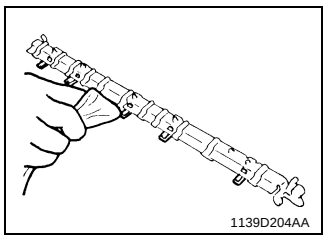

1. Using a soft cloth dampened with alcohol or silicone oil, wipe clean the Lower Separator Fingers.

(10) Disassembly of the Exit/Duplex Switching Unit (Option)

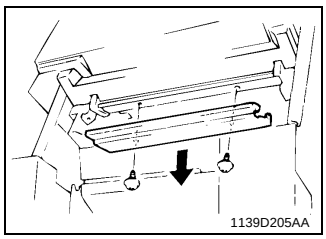

1. Remove two screws and the Upper Guide Plate.

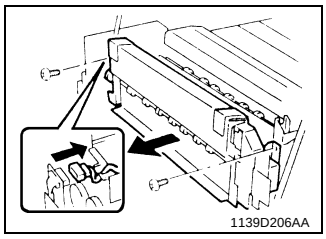

2. Remove two screws and the Exit/Duplex Switching Unit.
3. Unplug one connector.

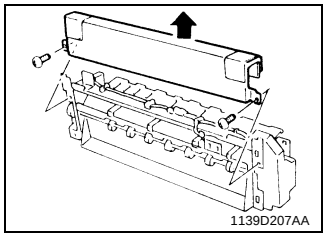

4. Remove two screws and the Cover.

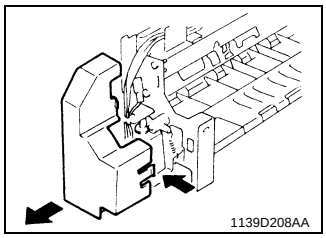

5. Remove the Solenoid Cover by unhooking its catches at three places.

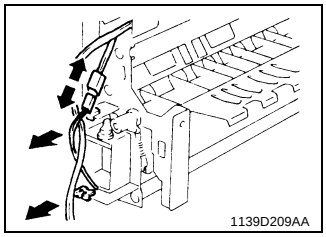

6. Unplug the solenoid connector.
7. Remove the harness from the Solenoid Unit clamps at two places.

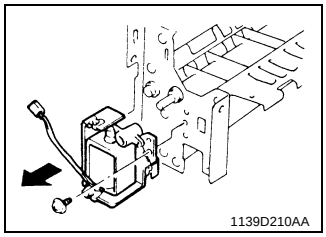

8. Remove one screw and the Solenoid Unit.

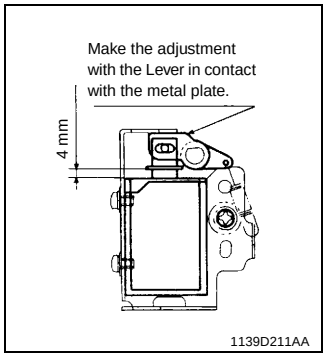

NOTE
If the solenoid has been removed from the Solenoid Unit, make the adjustment shown on the left with the Solenoid Unit installed in the Exit/Duplex Switching Unit.

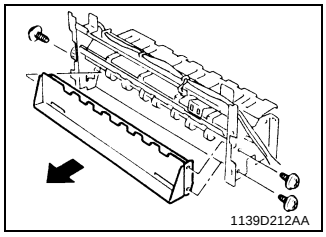

9. Remove three screws and the Copy Tray Holder.

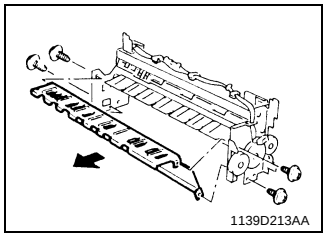

10. Remove four screws and the Lower Guide.

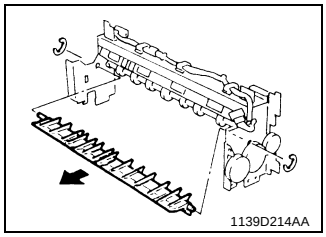
1139D214AA

11. Snap off two E-rings to remove the Exit/Duplex Switching Plate.

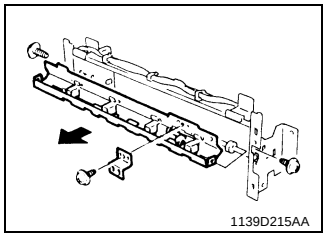
1139D215AA

12. Remove one screw and the Photoswitch Mounting Bracket.
13. Remove two screws and the Exit Rolls Mounting Bracket Unit.

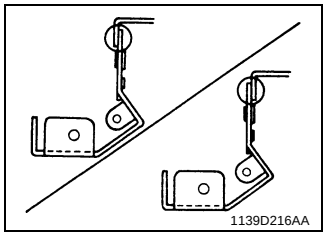
1139D216AA

NOTE
When reinstalling the Exit Rolls Mounting Bracket Unit, make sure that the Reinforcement Plate Unit is in contact with the Exit Rolls Mounting Bracket Unit as shown on the left.

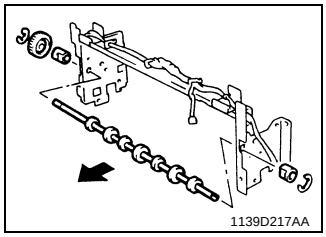
1139D217AA

14. Snap off two E-rings to remove the Exit Roller.

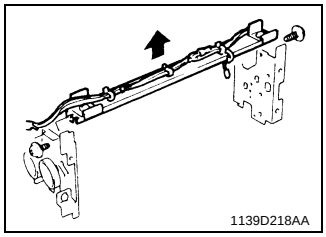
1139D218AA

15. Remove the harness from the clamp.
16. Remove two screws and the Reinforcement Plate Unit.

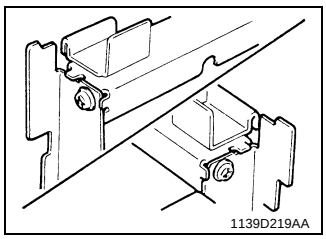

NOTE
When reinstalling the Reinforcement Plate Unit, make sure that the Unit is in contact with the frame at the front and rear sides of the copier as shown on the left.

3 ADJUSTMENT

3-1. JIGS AND TOOLS USED

Important

- When adjusting the positions of the Scanner and Mirrors Carriage, use Jigs numbered ③ and ④.
- When adjusting the gap between the Doctor Blade and Sleeve Roller, use Jigs numbered ⑤ and ⑥.

① Cable Holding jig

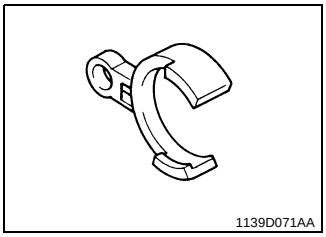

② Front Door Interlock Switch Actuating Jig

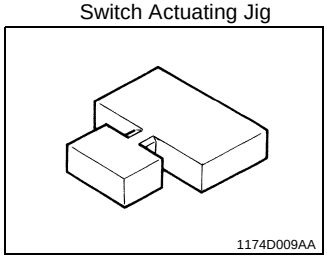

③ Scanner Positioning jig

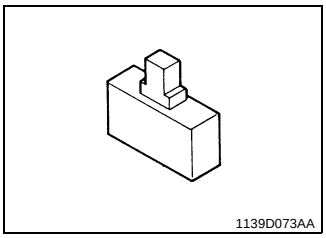

④ Scanner/Mirrors Carriage Positioning jig

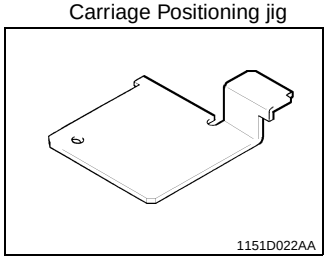

⑤ Sleeve/Magnet Roller Position jig

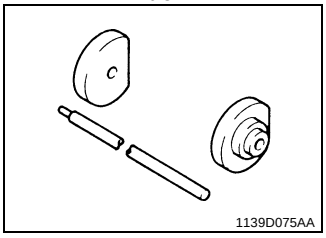

⑥ D.B. Adjusting jigs

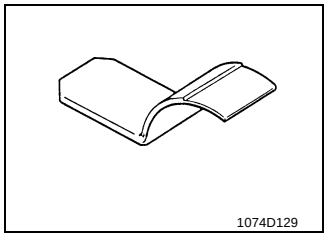

3-2. ADJUSTMENT REQUIREMENTS LIST

Adjustment Item	Requirements	Adjusting Point	Ref. Page
Max. Exposure Lamp Voltage	100 to 127V areas: 81 ± 1 V 200 to 240V areas: 162 ± 2 V	Control panel	D-52
Optimum Exposure Setting in the Manual Exposure Mode	Kodak Gray Scale: no image of the 1st step, faint image of the 2nd step	Control panel	D-55
Optimum Exposure Setting in the Auto Exposure Mode		Control panel	D-56
Multi Bypass Table Reference Position	(100 %) 20 ± 2 mm	Multi Bypass Table	D-59
1st Drawer Reference Position *1	(100 %) 20 ± 2 mm	Drawer Front Panel	D-60
2nd Drawer Reference Position	(100 %) 20 ± 2 mm	Drawer Front Panel	D-60
Full Size Leading Edge Registration	(100 %) 20 ± 1.5 mm	Control panel	D-62
Enlargement Leading Edge Registration	(200 %) 40 ± 3 mm	Control panel	D-64
Reduction Leading Edge Registration	(50 %) 10 ± 1.5 mm	Control panel	D-65
Image Leading Edge Erase Width	0.5 to 6.5 mm (100%) 1.0~6.5mm (200%) 0.5 ~11mm (50%) 0.5~6.5mm	Control panel	D-66
Image Erase Lamp Position	1 ± 0.5 mm	Adjusting Screw for Image Erase Lamp position	D-68
Adjustment of the Original Size Detecting Board		Control panel	D-71

*1 23 cpm copier only

Control Panel Indication
Different indications are given on the control panel (Zoom Ratio Indicator, etc.) between 15,18 and 23 cpm copier. For details, see Service Mode in Switches on PWBs.

3-3. ADJUSTMENT OF SWITCHES

(1) Adjustment of Front Door Interlock Switch S21

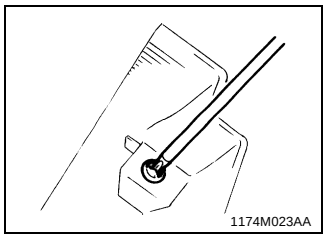

1. Open the Front Door.
2. Loosen two screws that secure the Front Door Interlock Switch Actuating Plate to the Front Door.

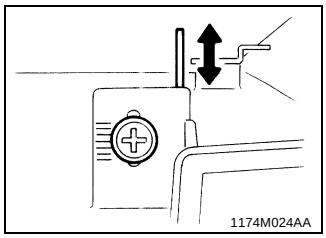

3. Move the Switch Actuating Plate back and forth to meet the requirements below.
   (Requirements)

- When the Front Door is closed, the Magnetic Catches on both sides are securely touched.
- When the Front Door is closed, Interlock Switch indicator on the Control Panel goes out.

3-4. ELECTRICAL/IMAGE ADJUSTMENTS

(1) Adjustment of the Maximum Exposure Lamp Voltage for the Manual Mode

Requirement

- Maximum Exposure Lamp voltage: 81 ± 1V (RMS value)

Important

- After the maximum Exposure Lamp voltage has been adjusted, be sure to make the following adjustments: Optimum Exposure Setting in the Manual Mode and Optimum Exposure Setting in the Auto Mode.

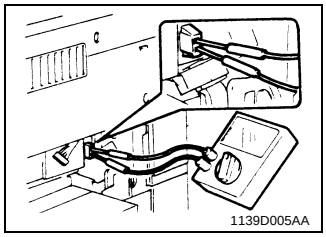
1139D005AA

1. Remove the Large Cover. (3 screws)
2. Insert the probes of the multimeter into the receptacles of the Exposure Lamp voltage measurement connector.

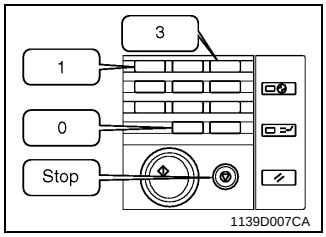

1139D007CA

3. On the control panel, press the Meter Count Key, stop Key, 10-keys “0”, 10-keys “0”, stop Key, 10-keys “0”, 10-keys “1”, 10-keys “1” and then “3” to set the copier into the F3 Test Mode. (At this time, the Magnification Ratio Indicator shows the currently set value and the Multi-Copy Display shown “F3.”)

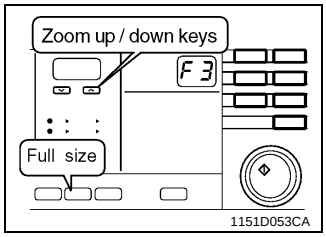

1151D053CA

4. Press the Full Size Key to select the Lamp voltage setting mode. (The Magnification Ratio Indicator shows “L + current setting.”)
5. Press the Start Key to light up the Exposure Lamp and, using the Zoom Up/Down Keys, adjust to obtain the Lamp voltage of 81V.

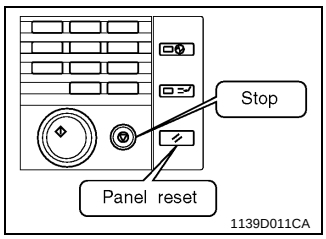

1139D011CA

6. Press the Stop Key to stop the F3 operation. (Or, the operation will be automatically completed in about 30 sec.)
7. Press the Panel Reset Key twice (or turn OFF the Power Switch) to return the copier back into the normal mode.

NOTE

For the Root Mean Square values and Mean values, see p. 53-54. Most testers, voltmeters, or multimeters used in the field show only the mean values.

When using the testers, voltmeters, or multimeters which show only the mean value, not Rms values, carry out the following procedure.

1. Measure the line voltage.
2. Referring to the Mean Value Chart corresponding to each voltage area, see the figure under the voltage obtained in step 1.

If the line voltage is 125 V and Rms value is 81 V, for example, the mean value is 54.5 V. Therefore, it is recommended that the voltage be adjusted so that the mean value is set as close to 54.5 V as possible.

MEAN VALUE
CHART FOR 115/120/127V AREAS

V / Rms	104	105	106	107	108	109	110	111	112	113	
81.0	60.7	60.3	60.0	59.7	59.2	59.0	58.5	58.2	58.0	57.7	MEAN VALUE

V / Rms	114	115	116	117	118	119	120	121	122	123	
81.0	57.3	57.0	56.8	56.5	56.2	56.0	55.7	55.5	55.2	55.0	MEAN VALUE

V / Rms	124	125	126	127	128	129	130	131	132	133	
81.0	54.7	54.5	54.3	54.2	54.0	53.7	53.5	53.2	53.0	52.8	MEAN VALUE

V / Rms	134	135	136	137	138	139	140	
81.0	52.7	52.5	52.2	52.1	52.0	51.7	51.5	MEAN VALUE

MEAN VALUE
CHART FOR 200/220/240V AREAS

V / Rms	180	181	182	183	184	185	186	187	188	189	
162.0	135.9	135.2	134.5	133.8	133.2	132.6	131.9	131.4	130.8	130.2	MEAN VALUE

V / Rms	190	191	192	193	194	195	196	197	198	199	
162.0	129.7	129.1	128.6	128.1	127.6	127.1	126.6	126.1	125.7	125.2	MEAN VALUE

V / Rms	200	201	202	203	204	205	206	207	208	209	
162.0	124.7	124.2	123.9	123.5	123.1	122.7	122.2	121.9	121.5	121.1	MEAN VALUE

V / Rms	210	211	212	213	214	215	216	217	218	219	
162.0	120.7	120.4	120.0	119.7	119.2	119.0	118.6	118.2	118.0	117.6	MEAN VALUE

V / Rms	220	221	222	223	224	225	226	227	228	229	
162.0	117.2	117.0	116.7	116.4	116.1	115.7	115.5	115.2	114.9	114.6	MEAN VALUE

V / Rms	230	231	232	233	234	235	236	237	238	239	
162.0	114.2	114.0	113.7	113.5	113.2	112.9	112.7	112.4	112.1	111.9	MEAN VALUE

V / Rms	240	241	242	243	244	245	246	247	248	249	
162.0	111.6	111.4	111.1	110.9	110.6	110.4	110.2	109.9	109.7	109.5	MEAN VALUE

V / Rms	250	251	252	253	254	255	256	257	258	259	
162.0	109.2	109.0	108.7	108.6	108.2	108.1	107.9	107.7	107.5	107.2	MEAN VALUE

V / Rms	260	261	262	263	264	265	266	267	268	269	
162.0	107.1	106.9	106.6	106.4	106.2	106.0	105.7	105.6	105.4	105.2	MEAN VALUE

V / Rms	270	271	272	273	274	
162.0	105.1	104.9	104.7	104.5	104.2	MEAN VALUE

(2) Adjustment of the Optimum Exposure Setting in the Manual Mode

Requirement

- When the manual exposure setting is at the central indication, no image of step no. 1 of a Kodak Gray Scale should be produced on the copy, but a faint image of step no. 2 should be produced.

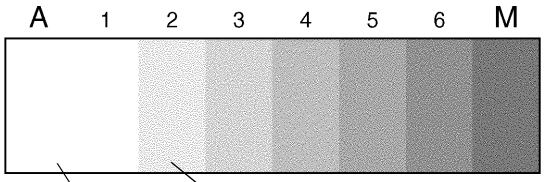

1139D270AA

No image of step no. 1

Faint image of step no. 2

Important

- This adjustment should be carried out only after completing “Adjustment of the Maximum Exposure Lamp Voltage for the Manual Mode” and “Adjustment of the Aperture Blades.”

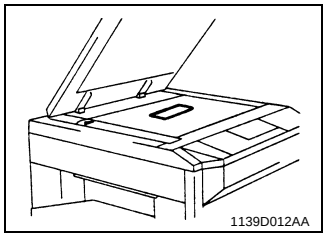

1139D012AA

1. Place the Kodak Gray Scale lengthwise, face down, and at the center on the Original Glass. Place a sheet of pure white A3 or 11” × 17” paper over it and then lower the Original Cover.
2. Set the copier into the Manual Exposure Mode. Set the Exposure Setting to the central or fifth indication and enter 15 copies to be made by using the 10-keys. (Use A3 paper.)
3. Press the Start Key.
   Check that the 15th copy meets the requirement given above.

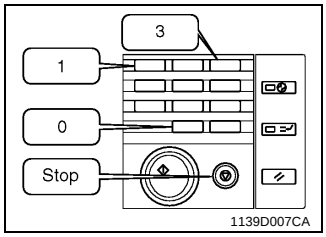

1139D007CA

4. If the exposure is out of adjustment, press the Meter Count Key, stop Key, 10-keys “0”, 10-keys “0”, stop Key, 10-keys “0”, 10-keys “1”, 10-keys “1” and then “3” to set the copier into the F3 Test Mode. (At this time, the Magnification Ratio Indicator shows the currently set value and the Multi-Copy Display shows “F3.”)

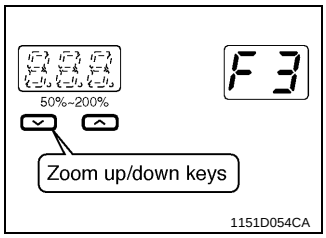

1151D054CA

5. Using the Zoom Up/Down Keys, vary the value on the Magnification Ratio Indicator as necessary.
6. After the adjustment has been made, press the Panel Reset Key twice (or turn OFF the Power Switch) to return the copier back into the normal mode.

NOTE

Increase the value to make the image lighter.
Decrease the value to make the image darker.

(3) Adjustment of the Optimum Exposure Setting in the Auto Mode

Important

- This adjustment must be made after the optimum exposure setting in the Manual Mode has been adjusted.

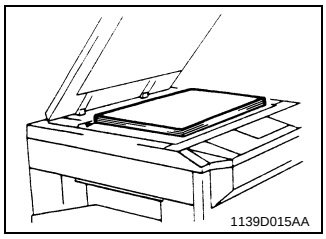

1. Place about five sheets of A3 or 11" × 17" paper on the Original Glass and lower the Original Cover.

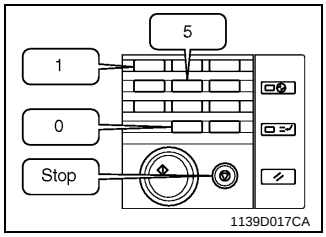

2. On the control panel, press the Meter Count Key, stop Key, 10-keys "0", 10-keys "0", stop Key, 10-keys "0", 10-keys "1", 10-keys "1" and then "5" to set the copier into the F5 Test Mode. (At this time, the Multi-Copy Display shows "F5.")

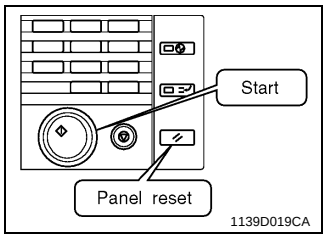

3. Press the Start Key to let the copier make the adjustment.
4. After the adjustment has been made, press the Panel Reset Key twice (or turn OFF the Power Switch) to return the copier back into the normal mode.

NOTE

Pressing the Start Key lets the copier make the adjustment of optimum exposure setting. During the adjustment, the Start Key is lit up orange. It turns to green as soon as the adjustment is completed. (It takes about 5 sec. to make the adjustment.) The Full Size Key can be used to alternately display on the Magnification Ratio Indicator either the adjusting value (AE Sensor memory level) or the voltage value (AE Sensor output).

(4) Adjustment of the ATDC Sensor

Important

- This adjustment is not necessary when a new Imaging Unit has been installed. (The ATDC Sensor is automatically adjusted when the starter is charged and the Power Switch turn ON.)
- The adjustment must be made whenever the currently used Imaging Unit has been charged with new starter.

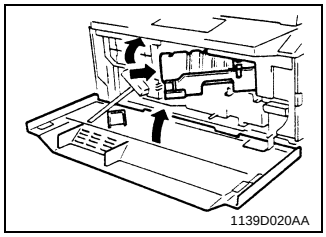

1. Load the starter.

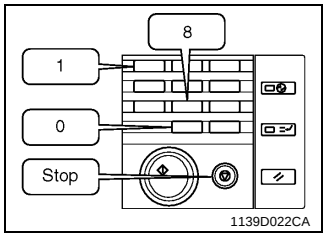

2. On the control panel, press the Meter Count Key, stop Key, 10-keys “0”, 10-keys “0”, stop Key, 10-keys “0”, 10-keys “1”, 10-keys “1” and then “8” to set the copier into the F8 Test Mode. (At this time, the Multi-Copy Display shows “F8.”)

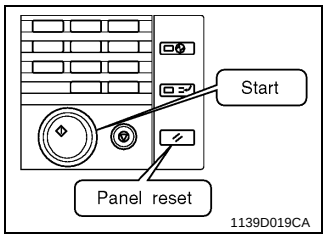

3. Press the Start Key to let the copier make the ATDC Sensor adjustment automatically. (It takes about 5 min. for the copier to complete the adjustment procedure.)
4. After the adjustment has been made, press the Panel Reset Key twice (or turn OFF the Power Switch) to return the copier back into the normal mode.

NOTE

The I/U Counter available from the Consumables counter menu is automatically reset when the ATDC Sensor gain adjustment has been completed.
The Full Size key can be used to alternately display the data on the Magnification Ratio Indicator, either the ATDC Sensor output voltage or ATDC Sensor gain.

(5) Adjustment of the Aperture Blades

Requirement

- There should be no dark or light bands running in the feeding direction on copies produced. (Adjust to obtain the mean image density for all areas.)

Important

- If dark and light bands running in the feeding direction occur on copies, make this adjustment after checking the following.

1. The Drum Charge Corona Wire, Grid Mesh, and Image Transfer Corona Wire are free of dirt.
2. The surfaces of the Mirrors and Lens are free of dirt.
3. The surfaces of the Exposure Lamp and Main Erase Lamp are free of scratches and dirt.
4. The Cleaning Blade is free of waviness.

1. Make a copy under the following control panel settings.

Original	: A3 or A4 crosswise, 11” × 17” or 11” × 8-1/2” crosswise
Paper	: A3 or A4 crosswise, 11” × 17” or 11” × 8-1/2” crosswise
Magnification ratio	: 100%
Exposure	: Manual (setting convenient for check)

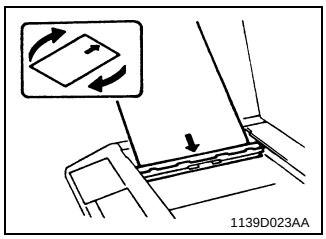
1139D023AA

2. Remove the Original Glass.
3. Turn the copy on the Copy Tray around as shown to reverse the leading and trailing edges and align it with the Aperture Blades.

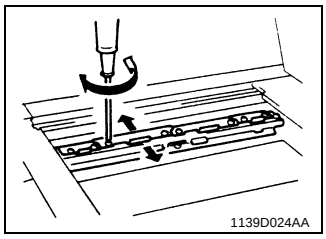
1139D024AA

4. Adjust to obtain the mean image density for all areas of the copy.

NOTE

To make the image darker, move the Aperture Blade toward the Auxiliary Reflector.
To make the image lighter, move the Aperture Blade away from the Auxiliary Reflector.

(6) Adjustment of the Multi Bypass Table Reference Position

Requirement

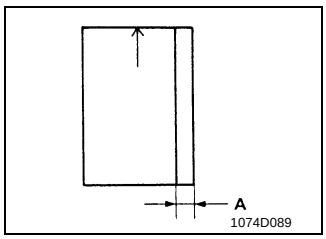

- Ready a test chart (A3 or 11" × 17") as shown on the left. Draw a line on the chart at a point 20 mm from the right edge as shown.
- Dimension A on the copy should measure 20 ± 2.0 mm.

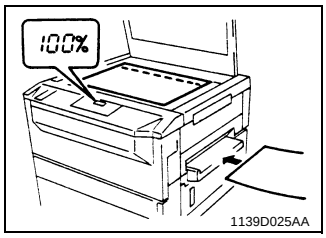

1. Place the test chart face down on the Original Glass and align its rear left corner with the ▷ marker on the Original Width Scale on the left side of the platen.
   Then, lower the Original Cover.
2. Using the Multi Bypass Table, make two full size copies.
3. Using the second copy, compare the position of the reference line on the copy with that on the test chart.

<15/18 cpm copier>

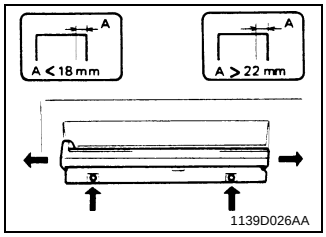

4. If the line does not meet the requirement, loosen the screws (23 cpm copier: three screws/15/18 cpm copier: two screws) that secure the Multi Bypass Table and move the Table as necessary in the direction of the arrows.

NOTE
If dimension A on the copy is smaller than 18 mm, move the Table to the front. If it is more than 22 mm, move the Table to the rear.
When an Automatic or Duplexing Document Feeder is mounted, it involves changing the Original Glass. This in turn results in the position of the Original Length Scale being slightly shifted toward the rear. This is corrected by installing the Original Positioning Plate.

<23 cpm copier>

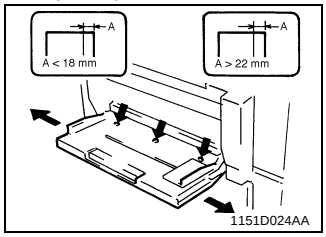

(7) Adjustment of the 1st/2nd (23 cpm copier only) Drawer Reference Position

Requirement

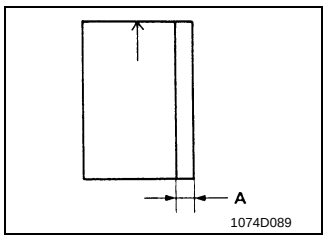

- Ready a test chart (A3 or 11" × 17") as shown on the left. Draw a line on the chart at a point 20 mm from the right edge as shown.
- Dimension A on the copy should measure 20 ± 2.0 mm.

Important

- If the Paper Tray of the Drawer needs to be moved for adjustment, make sure that it is moved straight, not slantwise (as skewed feeding of paper could result).

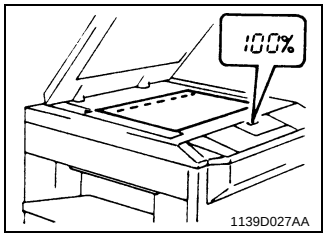

1. Place the test chart face down on the Original Glass and align its rear left corner with the ▷ marker on the Original Width Scale on the left side of the platen.
   Then, lower the Original Cover.
2. Using the 1st Drawer, make two full size copies. (Use A3 or 11" × 17" paper.)
3. Using the second copy, compare the position of the reference line on the copy with that on the test chart.

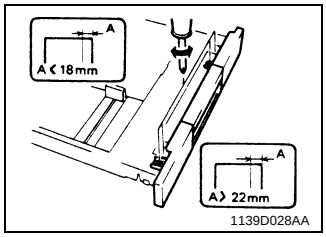

4. If the line does not meet the requirement, slide out the 1st Drawer, loosen the four screws shown on the left, and move the Paper Tray as necessary to the front or rear.
5. Using the same steps (1 through 4), adjust the reference position of the 2nd Drawer.

NOTE

If dimension A on the copy is smaller than 18 mm, move the Paper Tray to the rear. If it is more than 22 mm, move the Paper Tray to the front.

(8) Adjustment of the Paper Lifting Plate Springs (2nd Drawer): 23 cpm copier only

Important

- When the paper size loaded in the 2nd Drawer has been changed, be sure to replace the Springs by referring to the Table given below. (For replacement of the Springs, see p. D-13.)
- When the Springs have been replaced, change the position of the 2nd Drawer Paper Take-Up Roll by referring to the Table given below. (For disassembly of the Paper Take-Up Roll Unit, see p. D-11.)
- The Springs for replacement can be found on the underside of the 2nd Drawer.

[Roll Positions]

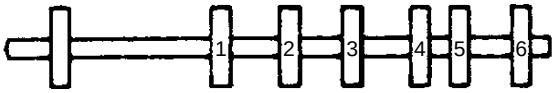

1139D029AA

			Positions of 2nd Drawer Spring Installation					2nd Drawer Paper Take-up Roll Position
	NO	2nd Drawer Paper Size Indication	SP1. 1~9 SP2. 10~14	SP2. 12~24	SP1. 6~9 SP2. 10~11	SP1. 2~5	SP1. 1	
Edge Guide	1	A3/A4	SP Silver				SP Silver	6
	2	11 × 17 LTR.				SP Silver		5
	3	G.LTR						5
	4	B4/B5						4
	5	254						4
	6				SP Silver			3
	7	FLS.						3
	8	LTR.						3
	9	A4						3
	10	FLS.	SP Gold		SP Gold			2
	11	B5						2
	12			SP Gold				1
	13	A5						1
	14	INV.						1

(9) Adjustment of the Leading Edge Registration

Full Size
Requirement

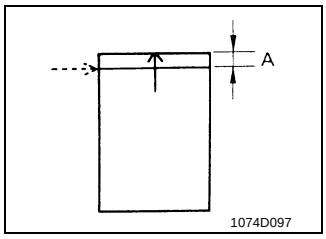

- Ready a test chart (A3 or 11" × 17") as shown on the left. Draw a line across the test chart at a point 20 mm from the leading edge and use it as the reference line.
  Dimension A at the center on the copy should meet the following requirements.

Mag. Ratio	Dimension A (mm)
Full Size (100%)	20.0 ± 1.5
Enlargement (200%)	40.0 ± 3
Reduction(50%)	10.0 ± 1.5

- Setting value range: 30 to 70
- Movement equivalent to 1 step of setting value: 0.28 mm

Important
- After having set the copier into the Adjust Mode, make two single copies and use the second copy for the check. (The first copy represents the data before adjustment.)
- When full size leading edge registration has been adjusted, it affects leading edge registration in the enlargement and reduction mode. Be sure, therefore, to check for registration in these modes, too.

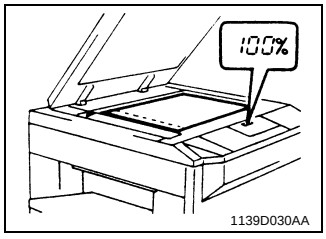

1. Place the test chart face down on the Original Glass and align its rear left corner with the ▷ marker on the Original Width Scale on the left side of the platen. Then, lower the Original Cover.
2. Make two single copies in full size mode (100%) and check for leading edge registration on the second copy.
   (If it meets the requirement, go to "Adjustment of Enlargement Leading Edge Registration.")

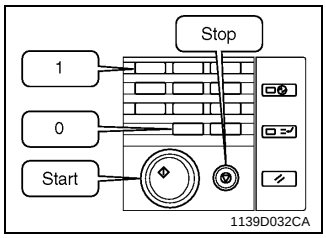

3. If the registration does not meet the requirement, go to the control panel and press the Meter Count Key, stop Key, 10-keys "0", 10-keys "0", stop Key, 10-keys "0", 10-keys "1", Stop Key, Start Key to set the copier into the Adjust Mode. (At this time, the Magnification Ratio Indicator shows "A.")

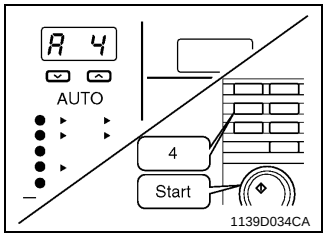

4. Press 10-keys “4” and press the Start Key. (Then, the Magnification Ratio Indicator shows “A4” and the Multi-Copy Display, the current setting value.)

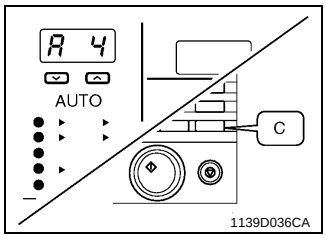

5. Press the Clear Key to clear the current setting value.
6. With the old setting value used as reference, enter the new setting value using the appropriate 10-keys.

NOTE
If dimension A on the copy is smaller than 18.5 mm, decrease the setting value.
If dimension A on the copy is greater than 21.5 mm, increase the setting value.

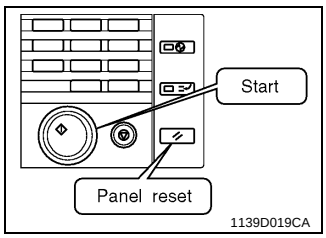

7. Press the Start Key to validate the setting.
8. Press the Panel Reset Key twice (or turn OFF the Power Switch) to return the copier back to the normal mode.
9. Make two single copies and check for leading edge registration on the second copy. (If it does not meet the requirement, perform steps 3 through 10 again.)

Enlargement

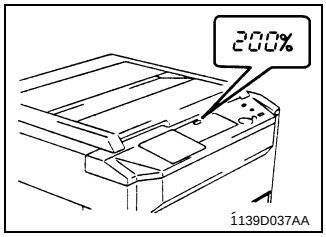

1. After the leading edge registration in the full size mode has been adjusted, make two single copies in an enlargement mode (200%) and check for leading edge registration on the second copy. (If the enlargement leading edge registration meets the requirement, go to “Adjustment of Reduction Leading Edge Registration.”)

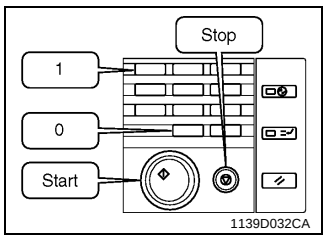

2. If the registration does not meet the requirement, go to the control panel and press the Meter Count Key, stop Key, 10-keys “0”, 10-keys “0”, stop Key, 10-keys “0”, 10-keys “1”, Stop Key, Start Key to set the copier into the Adjust Mode. (At this time, the Magnification Ratio Indicator shows “A.”)

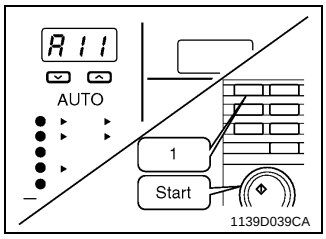

3. Press 10-keys “5” and press the Start Key. (Then, the Magnification Ratio Indicator shows “A5” and the Multi-Copy Display, the current setting value.)

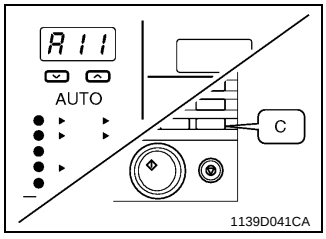

4. Press the Clear Key to clear the current setting value.
5. With the old setting value used as reference, enter the new setting value using the appropriate 10-keys.

NOTE
If dimension A on the copy is smaller than 8.5 mm, decrease the setting value.
If dimension A on the copy is greater than 11.5 mm, increase the setting value.

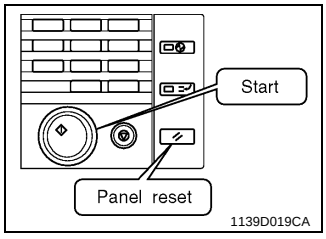

6. Press the Start Key to validate the new setting.
7. Press the Panel Reset Key twice (or turn OFF the Power Switch) to return the copier back to the normal mode.
8. Make two single copies and check for leading edge registration on the second copy. (If it does not meet the requirement, perform steps 2 through 9 again.)

Reduction

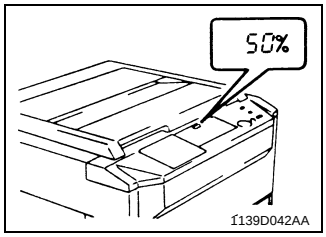

1. After the leading edge registration in an enlargement mode has been adjusted, make two single copies in a reduction mode (50%) and check for leading edge registration on the second copy.

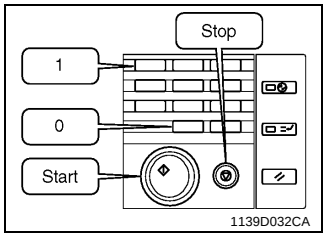

2. If the registration does not meet the requirement, go to the control panel and press the Meter Count Key, stop Key, 10-keys “0”, 10-keys “0”, stop Key, 10-keys “0”, 10-keys “1”, Stop Key, Start Key to set the copier into the Adjust Mode. (At this time, the Magnification Ratio Indicator shows “A.”)

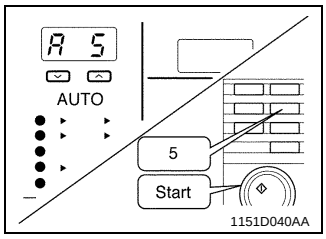

3. Press 10-keys “5” and press the Start Key. (Then, the Magnification Ratio Indicator shows “A 5” and the Multi-Copy Display, the current setting value.)

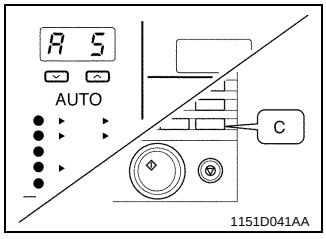

4. Press the Clear Key to clear the current setting value.
5. With the old setting value used as reference, enter the new setting value using the appropriate 10-keys.

NOTE
If dimension A on the copy is smaller than 8.5 mm, decrease the setting value.
If dimension A on the copy is greater than 11.5 mm, increase the setting value.

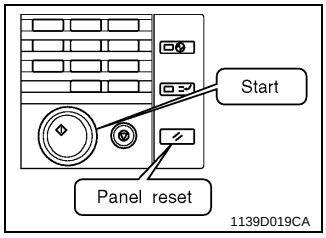

6. Press the Start Key to validate the new setting.
7. Press the Panel Reset Key twice (or turn OFF the Power Switch) to return the copier back to the normal mode.
8. Make two single copies and check for leading edge registration on the second copy. (If it does not meet the requirement, perform steps 2 through 9 again.)

(10) Adjustment of the Image Leading Edge Erase Width

Requirement

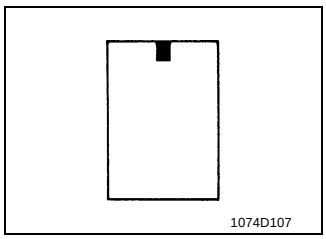

- Ready a test chart (A3 or 11" × 17") as shown on the left. Paint a 20 mm-long rectangle in black at the center of the test chart along its leading edge as shown. Adjust so that the erase width along the leading edge of the painted area measures 0.5 to 6.5 mm.

- Setting value range: 42 to 58
- Movement equivalent to 1 step of setting value: 0.75 mm
- Having a greater setting value results in a greater erase width.
- Having a smaller setting value results in a smaller erase width.

Important

- This adjustment must be made after the leading edge registration adjustment has been completed.

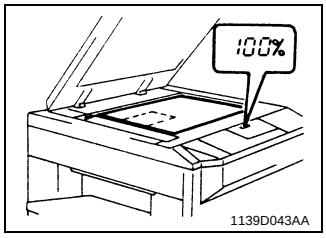

1. Place the test chart face down on the Original Glass and align its rear left corner with the ▷ marker on the Original Width Scale on the left side of the platen.
   Then, lower the Original Cover.
2. Make two single copies in full size mode (100%) and check for leading edge registration on the second copy.

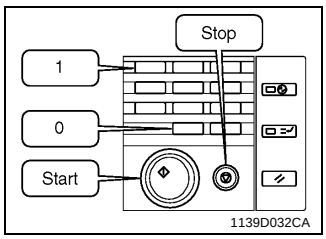

3. If the erase width does not meet the requirement, go to the control panel and press the Meter Count Key, stop Key, 10-keys "0", 10-keys "0", stop Key, 10-keys "0", 10-keys "1", Stop Key, Start Key to set the copier into the Adjust Mode. (At this time, the Magnification Ratio Indicator shows "A.")

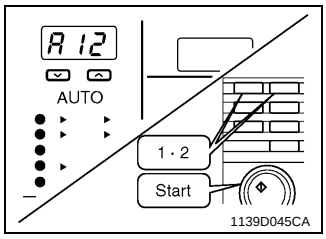

4. Press 10-keys "1 · 2" and press the Start Key. (Then, the Magnification Ratio Indicator shows "A 12" and the Multi-Copy Display, the current setting value.)

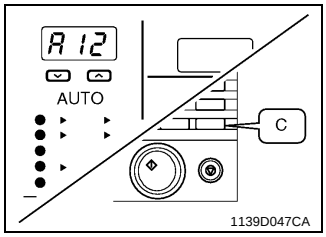

5. Press the Clear Key to clear the current setting value.
6. With the old setting value used as reference, enter the new setting value using the appropriate 10-keys.

NOTE
If the erase width on the copy is less than 0.5 mm, increase the setting value.
If the erase width on the copy exceeds 6.5 mm, decrease the setting value.

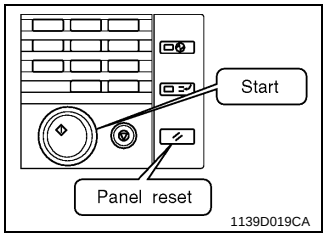

7. Press the Start Key to validate the setting.
8. Press the Panel Reset Key twice (or turn OFF the Power Switch) to return the copier back to the normal mode.
9. Make two single copies and check for leading edge erase width on the second copy. (If it does not meet the requirement, perform steps 3 through 9 again.)

(11) Adjustment of the Image Erase Lamp Position

Requirement

- Image erase width: Within 1 ± 0.5 mm

Important

- This adjustment must be made after the reference positions of the Multi Bypass Table and 1st and 2nd (23 cpm copier only) Drawers have been adjusted.

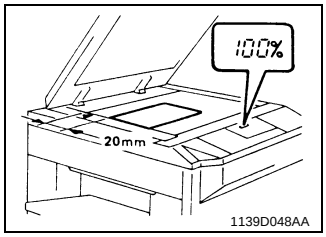

1. With the Original Cover raised, place a sheet of A4 or 8-1/2" × 11" paper lengthwise on the Original Glass.

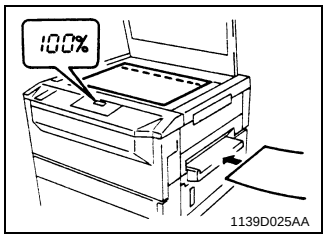

2. With the Original Cover raised, make a full size copy.
3. Check the erase width on the front edge and turn the edge erase width adjusting screw as necessary to obtain an erase width of less than 1 ± 0.5 mm.

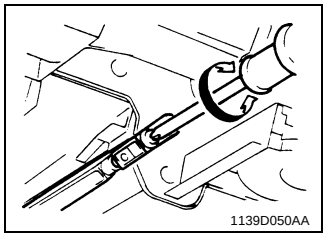

NOTE

Loosening the screw will make the erase width smaller.
Tightening the screw will make the erase width greater.

3-5. OTHER ADJUSTMENTS

(1) Adjustment of the Scanner/Mirrors Carriage Position

Requirement

- With the Scanner positioned correctly with reference to the upper copier frame, there should be no gap between the Scanner/Mirrors Carriage and the Scanner/Mirrors Carriage Positioning Jig.

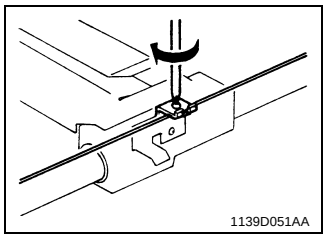

1. Remove the Original Cover, Original Scales, and Original Glass.
2. Temporarily tighten the screw on the Scanner Drive Cable Holding Bracket.

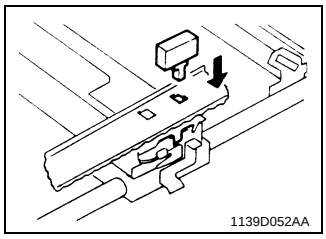

3. Align the rectangular hole in the upper copier frame with the U-groove in the Scanner, then insert the Scanner Positioning Jig into the hole.

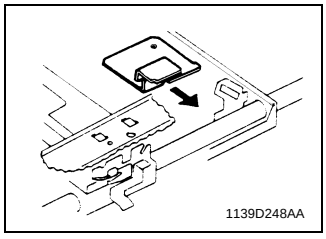

4. Install the Scanner/Mirrors Carriage Positioning Jig between the Scanner and Mirrors Carriage.

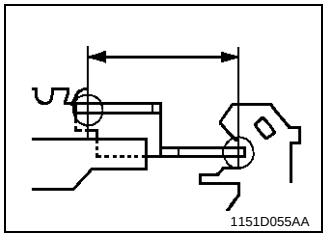

5. Loosen the screw that has been temporarily tightened in step 2. Turn the helical gear of the Scan Pulley to press the Mirrors Carriage up against the Scanner/Mirrors Carriage Positioning Jig and the Scanner.
6. Tighten the screw on the Scanner Drive Cable Holding Bracket.

(2) Adjustment of the Gap Between the Doctor Blade and Sleeve Roller

Requirement

- The gap between the Doctor Blade and the Sleeve Roller should be 0.35 mm ± 0.05 mm.

Important

- Cover the PC Drum with the Drum Cloth to prevent it from being scratched.

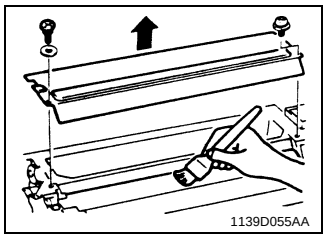

1. Remove the Developer Scattering Prevention Plate.
2. Wipe the developer off the surface of the Sleeve Roller.

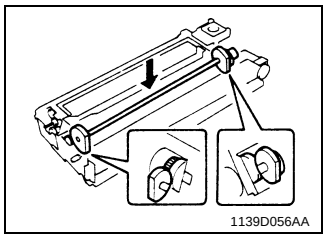

3. Install the Sleeve/Magnet Roller Positioning Jig onto the Imaging Unit.

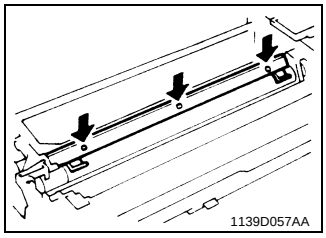

4. Loosen the three screws securing the Doctor Blade in position. Insert the D.B. Adjusting Jigs into the space between the Doctor Blade and Sleeve Roller.
5. Press down the Doctor Blade until it positively contacts the D.B. Adjusting Jigs, then tighten the three screws to secure it in position.

(3) Adjustment of the Original Size Detecting Board

Important

- This adjustment must be made after the Original Size Detecting Board has been replaced.

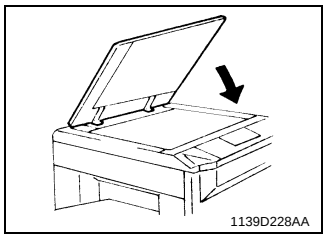

1. Lower the Original Cover with no paper on the Original Glass.

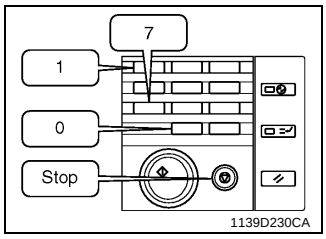

2. On the control panel, press the Meter Count Key, stop Key, 10-keys “0”, 10-keys “0”, stop Key, 10-keys “0”, 10-keys “1”, 10-keys “1” and then “7” to set the copier into the F7 Test Mode. (At this time, the Multi-Copy Display shows “F7.”)

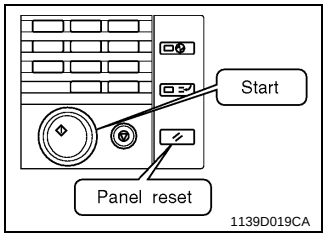

3. Press the Start Key to let the copier make the adjustment.

NOTE
During the adjustment, the Start Key is lit up orange. It turns to green as soon as the adjustment is completed.
(It takes about 2 sec. to make the adjustment.)

4. After the adjustment has been made, press the Panel Reset Key twice (or turn OFF the Power Switch) to return the copier back into the normal mode.

4 MISCELLANEOUS

4-1. INSTALLATION OF THE PLUG-IN COUNTER MOUNTING BRACKET (OPTION)

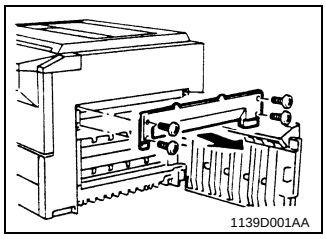

1. Remove the Middle Right Cover.

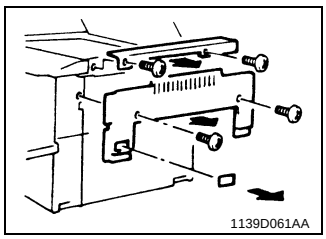

2. Remove the Counter Cover.
3. Remove the Upper Right Cover.
4. Remove the Right Cover.

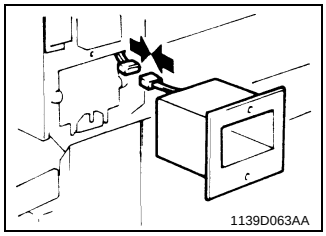

5. Connect the Plug-In Counter Connector.

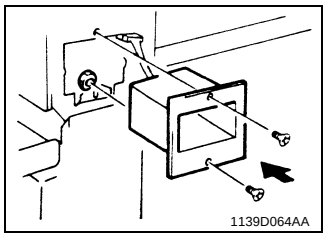

6. Secure the Plug-In Counter Mounting Bracket by tightening the two screws.

CONTENTS

1. PRECAUTIONS FOR HANDLING THE PWBs S-1
1-1. Precautions for Transportation and Storage S-1
1-2. Precautions for Replacement and Inspection S-1
2. CONTROL PANEL KEYS AND INDICATORS S-2
2-1. 15 cpm Copier S-2
2-2. 18 cpm Copier S-4
2-3. 23 cpm Copier S-6
3. FUNCTIONS OF SWITCHES AND OTHER PARTS ON PWBs S-8
3-1. PWB Location S-8
3-2. Tech. Rep. Setting Switches Board S-8
4. USER MODE S-10
4-1. Functions Available from the User Mode S-10
4-2. User Mode Setting Procedure S-10
4-3. User Mode Setting Details S-11
5. SERVICE MODE S-16
5-1. Service Mode Function Tree S-16
5-2. Entering the Service Mode S-17
5-3. Settings in the Service Mode S-18
(1) Test S-18
(2) Tech. Rep. Choice S-20
(3) Altering Fixed Zoom Ratios (For 23 cpm Copier Only) S-25
(4) PM Counter and Ports/Options Counter S-25
(5) Paper Size Counter S-26
(6) Misfeed Counter S-27
(7) Malfunction Counter S-28
(8) Parts/Supplies Life Counter S-29
(9) Paper Size Input (For 23 cpm Copier Only) S-30
(10) Display S-30
6. ADJUST MODE S-31
6-1. Functions Available in the Adjust Mode S-31
6-2. Entering the Adjust Mode S-31
6-3. Settings in the Adjust Mode S-32
7. FUNCTION SETTING REQUIREMENTS AT REPLACEMENT OF PARTS ... S-34

1 PRECAUTIONS FOR HANDLING THE PWBs

1-1. Precautions for Transportation and Storage

A. Before transporting or storing the PWBs, put them in protective conductive cases or bags so that they are not subjected to high temperature (and they are not exposed to direct sunlight).
B. Protect the PWBs from any external force so that they are not bent or damaged.
C. Once the PWB has been removed from its conductive case or bag, never place it directly on an object that is easily charged with static electricity (such as a carpet or plastic bag).
D. Do not touch the parts and printed patterns on the PWBs with bare hands.

1-2. Precautions for Replacement and Inspection

A. Whenever replacing the PWB, make sure that the power cord of the copier has been unplugged.
B. When the power is on, the connectors should never be plugged in or unplugged.
C. Use care not to strap the pins of an IC with a metal tool.
D. When touching the PWB, wear a wrist strap and connect its cord to a securely grounded place whenever possible. If you cannot wear a wrist strap, touch the metal part to discharge static electricity before touching the PWB.

2 CONTROL PANEL KEYS AND INDICATORS

✻ For more details, see the “Operator’s Manual” shipped with the copier.

2-1. 15 cpm Copier

1. 10-Keys
- Numeric keypad used for setting the number of copies to be made, zoom ratio, and Tech. Rep. mode settings.

2. Clear Key
- Clear the number-of-copies setting, zoom ratio, choice modes setting.

3. Energy Saver Key
- Sets the copier into the Energy Saver mode.

4. Panel Reset Key
- Resets the copier to the initial mode.

5. Stop Key
- Stops a multi-copy cycle or a test (F✻) operation.

6. Start Key
- Starts a multi-copy cycle or a test (F✻) operation.

7. Zoom Ratio Select Key
- Selects a fixed zoom ratio.

8. Zoom Up/Down Keys
- Changes the zoom ratio manually.

9. Auto Exposure Mode Key
- Selects either the Auto or Manual Exposure, or Photo mode.

10. Exposure Control Keys
- Selects the exposure level.

11. Paper Select Key
- Selects the paper source.

12. Book Key
- Selects the Book mode.

13. Drum Dehumidify Key
- Runs a Drum Dehumidify cycle.

14. Auxiliary Toner Replenishing Key
- Starts an auxiliary toner replenishing sequence.

15. Meter Count Key
- Gives a display of the current copy count.

NOTE
15 cpm Copier is Except for U.S.A. and Canada Areas.

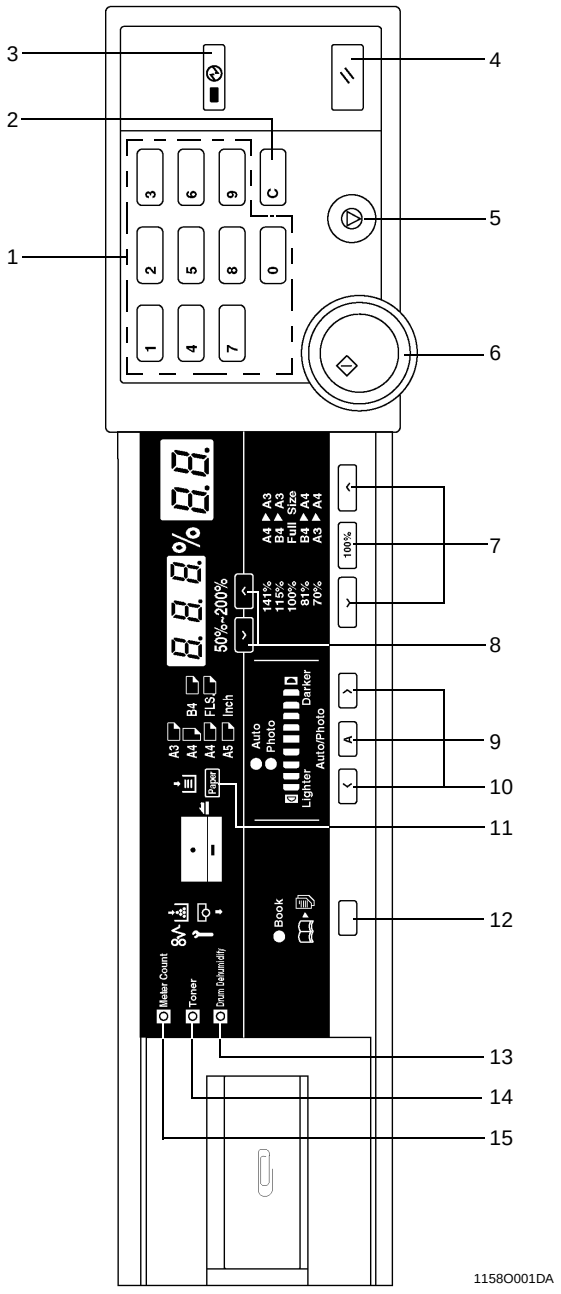
3
4
2
5
1
6
7
8
9
10
11
12
13
14
15
1158O001DA

✻ For more details, see the “Operator’s Manual” shipped with the copier.

2-2. 18 cpm Copier

1. 10-Keys
- Numeric keypad used for setting the number of copies to be made, and Tech. Rep. mode settings.

2. Clear Key
- Clear the number-of-copies setting, choice modes setting.

3. Energy Saver Key
- Sets the copier into the Energy Saver mode.

4. Panel Reset Key
- Resets the copier to the initial mode.

5. Stop Key
- Stops a multi-copy cycle or a test (F*) operation.

6. Start Key
- Starts a multi-copy cycle or a test (F*) operation.

7. Zoom Ratio Select Key
- Selects a fixed zoom ratio.

8. Zoom Up/Down Keys
- Changes the zoom ratio manually.

9. Auto Exposure Mode Key
- Selects either the Auto or Manual Exposure, or Photo mode.

10. Exposure Control Keys
- Selects the exposure level.

11. Paper Select Key
- Selects the paper source.

12. Book Key
- Selects the Book mode.

13. Finishing Mode Select Key
- Selects the Sort mode.

14. Auto Size Key
- Selects the Auto Size mode.

15. Drum Dehumidify Key
- Runs a Drum Dehumidify cycle.

16. Auxiliary Toner Replenishing Key
- Starts an auxiliary toner replenishing sequence.

17. Meter Count Key
- Gives a display of the current copy count.

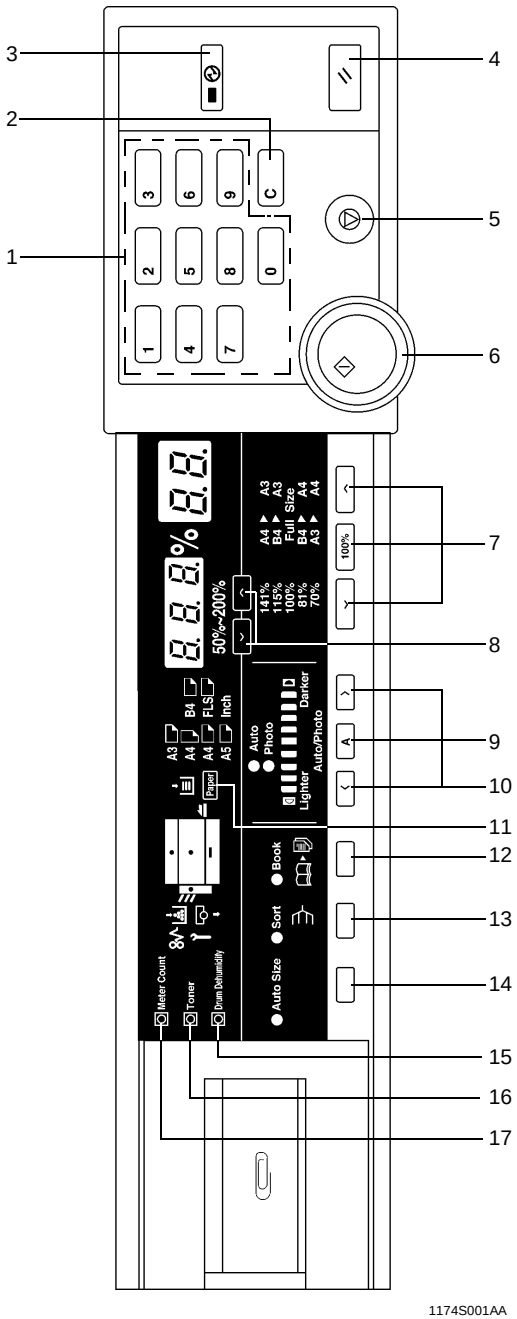
3
4
2
1
5
6
7
8
9
10
11
12
13
14
15
16
17
50%~200%
Auto
Photo
Lighter
Darker
Auto/Photo
Book
Sort
Auto Size
Meter Count
Toner
Drum Dehumidify
Paper
1174S001AA

✻ For more details, see the “Operator’s Manual” shipped with the copier.

2-3. 23 cpm Copier

1. 10-Keys
- Numeric keypad used for setting the number of copies to be made, zoom ratio, and Tech. Rep. mode settings.

2. Clear Key
- Clear the number-of-copies setting, zoom ratio, choice modes setting.

3. Energy Saver Key
- Sets the copier into the Energy Saver mode.

4. Interrupt Key
- Sets the copier into, or lets it leave, the Interrupt mode.

5. Panel Reset Key
- Resets the copier to the initial mode.

6. Stop Key
- Stops a multi-copy cycle or a test (F*) operation.

7. Start Key
- Starts a multi-copy cycle or a test (F*) operation.

8. Paper Select Key
- Selects the paper source.

9. Zoom Ratio Select Key
- Selects a fixed zoom ratio.

10. Zoom Up/Down Keys
- Changes the zoom ratio manually.

11. Auto Exposure Mode Key
- Selects either the Auto or Manual Exposure, or Photo mode.

12. Exposure Control Keys
- Selects the exposure level.

13. Mixed Original Detection Key
- Selects the Mixed Original mode.

14. Orig. ▶ Copy Key
- Selects the original-and-copy type.

15. Manual Staple Key
- Effects manual stapling of copies.

16. Finishing Key
- Selects the finishing type.

17. Auto Size Key
- Selects the Auto Size mode.

18. File Margin Key
- Selects the Margin mode.

19. Cover Key
- Selects the Cover mode.

20. Job Memory Select Key
- Calls up a job program previously stored in memory.
- Stores a job program when used in combination with the Input key.

21. Job Memory Input Key
- Stores a job program in, or erases it from, memory.

22. Drum Dehumidify Key
- Runs a Drum Dehumidify cycle.

23. Auxiliary Toner Replenishing Key
- Starts an auxiliary toner replenishing sequence.

24. Meter Count Key
- Gives a display of each of the current counts of different electronic counters of the copier.

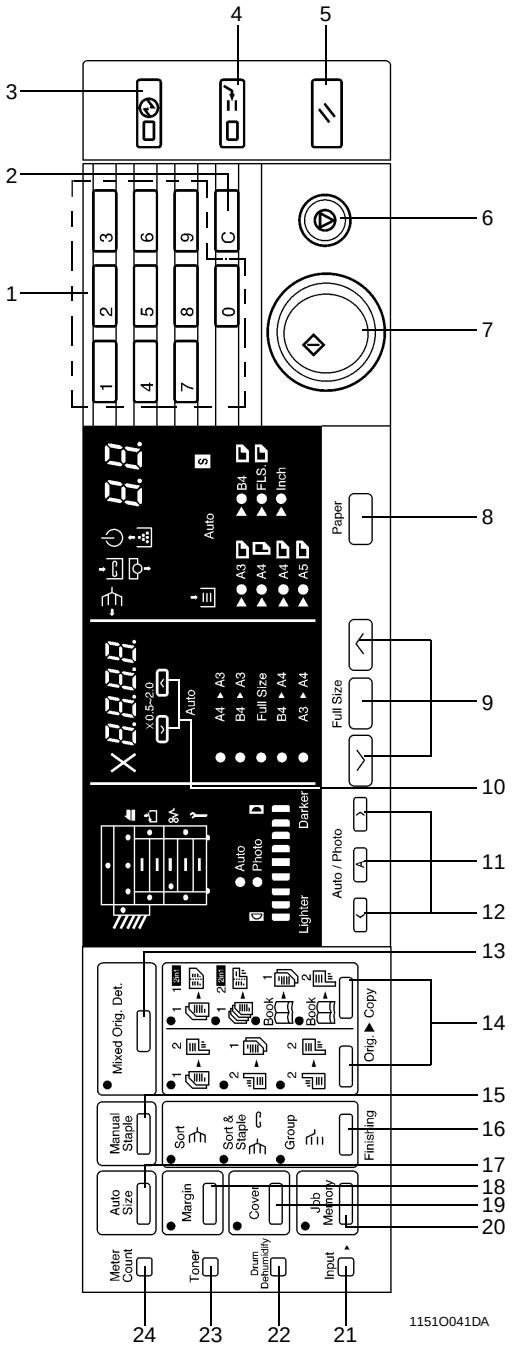
1
2
3
4
5
6
7
8
9
10
11
12
13
14
15
16
17
18
19
20
21
22
23
24
Paper
Full Size
Auto / Photo
Mixed Orig. Det.
Orig. ▲ Copy
Manual Staple
Finishing
Auto Size
Margin
Cover
Job Memory
Meter Count
Toner
Drum Dehumidify
Input
1151O041DA

3 FUNCTIONS OF SWITCHES AND OTHER PARTS ON PWBs

3-1. PWB Location

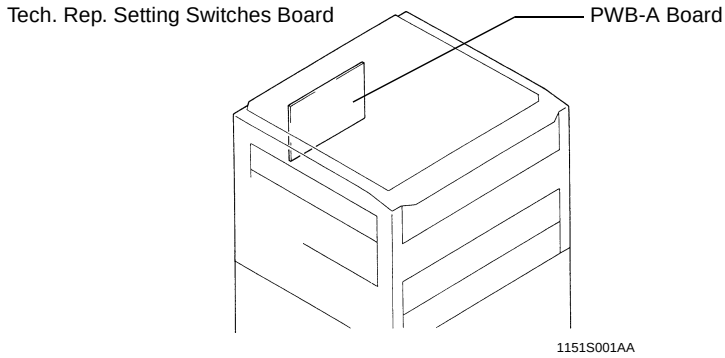

3-2. Tech. Rep. Setting Switches Board

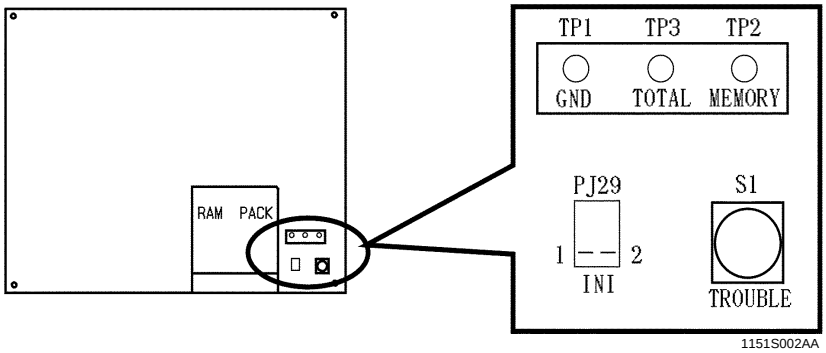

Symbol	Name	Description
S1	Trouble Reset Switch	Resets all malfunctions including Exposure Lamp (C04XX) and fusing (C05XX) malfunctions.
PJ2	Initialize Points	Forcibly resets a misfeed or malfunction that occurred due to incorrect operation, etc. when it cannot be reset by opening and closing the Front Door and turning ON S1.
TP1	GND Test Point	Ground terminal used for memory clear.
TP2	Memory Clear Test Point	Initializes all data except those counted by the electronic counters.

<Clearing Procedures>
- Initialize Points PJ2

1. Turn OFF the Power Switch.
2. With PJ2 closed, turn ON the Power Switch.
3. In approx. 5 sec., open PJ2.

- Memory Clear Test Point TP2

1. Turn OFF the Power Switch.
2. With the circuit across TP1 and 2 closed, turn ON the Power Switch.
3. In approx. 5 sec., open the circuit across TP1 and 2.

NOTE
- *If an erratic operation or display occurs, perform the clearing procedures in the order of PJ2 and TP2.*
- *When memory clear has been performed, make the necessary settings again.*

<List of Data Cleared by Switches and Points>

Clearing Means / Data Cleared	Front Door Open/Close	Trouble Reset Switch (S1)	Initialize Points (PJ2)	Memory Clear Test Point (TP2)
Misfeed display	❍	❍	❍	❍
Malfunction display (excluding Exposure Lamp and fusing malfunctions)	❍	❍	❍	❍
Malfunction display (including Exposure Lamp and fusing malfunctions)	–	❍	❍	❍
Erratic operation/display	–	–	❍	❍
User mode	–	–	–	❍
Service mode	–	–	–	❍
F3/5/8 adjustment values	–	–	–	❍
Adjust mode	–	–	–	❍

❍ : Cleared – : Not cleared

4 USER MODE

- This mode is used to make various settings according to the user's needs.

4-1. Functions Available from the User Mode

No.	Function
*0	Mixed Original Detection
**4	Lightweight Original
*6	Smaller Originals
7	Auto Power OFF Disabling
*9	File Margin
*10	Priority Paper Size/Source
**12	APS/AMS/Manual Priority
13	Optimum Exposure Level
14	Priority Manual Exposure Level
**15	Finishing Mode Priority

No.	Function
*18	Priority Orig. ▶ Copy type
20	Auto clear ON/OFF
21	Energy Saver ON Timing
**23	Auto Clear for Plug-In Counter
**24	Sort/Non-Sort Switching ON/OFF
28	Auto Power OFF Timing
*51	Special Paper Setting (1st Drawer)
*52	Special Paper Setting (2nd Drawer)
*53	Special Paper Setting (3rd Drawer)
*54	Special Paper Setting (4th Drawer)

*For 23 cpm Copier only
**For 18/23 cpm Copier only

4-2. User Mode Setting Procedure

<Setting Procedure>
1. Hold down the Panel Reset key for about 3 seconds to set the copier into the User mode. ("U" appears on the Zoom Ratio Indicator.)
2. From the 10-Keys, enter the number assigned to the desired function. (The number entered appears following the letter "U" on the Zoom Ratio Indicator.)
3. Press the Start key. (Then, the current setting for that particular function appears on the Multi-Copy Display.)
4. Press the Clear key.
5. Make a new setting.
6. Press the Start key to validate the entry of the new setting.

Note
If the setting data entered is outside the specifications, it is not validated and is shown blinking.

<Resetting Procedure>
- Press the Panel Reset key to return to the Basic screen.

[User Mode]

4-3. User Mode Setting Details

<table>
<tr><th>Function No.</th><th>Setting (The default is Highlighted .)</th></tr>
<tr><td>U-0
*For 23 cpm Copier only</td><td><Mixed Original Detection>
Select whether to turn ON the Mixed Original Detection function or not (high-speed processing).
ON: The copier enables its Auto Paper Selection (APS) or Auto Size Selection (AMS) function for all originals loaded in the ADF (i.e., it can make copies from originals of assorted sizes loaded in a set).
OFF: The copier enables its APS/AMS function only for the first original loaded in the ADF.
<table><tr><td>Data</td><td>0</td><td>1</td></tr><tr><td>Description</td><td>Mixed Original Detection function ON</td><td>Mixed Original Detection function OFF (high-speed processing)</td></tr></table></td></tr>
<tr><td>U-4
**For 18/23 cpm Copier only</td><td><Lightweight Original>
Select whether to turn ON the Lightweight Original function or not when the ADF is used.
<table><tr><td>Data</td><td>0</td><td>1</td></tr><tr><td>Description</td><td>Normal
The original is pressed against the Original Width Scale when stopped.</td><td>Lightweight Original
The original is not pressed against the Original Width Scale when stopped.</td></tr></table></td></tr>
<tr><td>U-6
*For 23 cpm Copier only</td><td><Smaller Originals>
Select whether to enable (“ON”) a copy cycle or not (“OFF”) when it is initiated by pressing the Start key with an original of the smallest detectable size (metric areas: A5 or smaller; inch areas: Letter or smaller) placed on the Original Glass.
<table><tr><td>ON</td><td>OFF</td></tr><tr><td>The copy cycle is run using the paper loaded in the default paper source.</td><td>A warning message is given and the copier inhibits the start of this copy cycle.</td></tr></table>
NOTE
The default setting is OFF for the metric areas and ON for the inch areas.</td></tr>
</table>

[User Mode]

<table>
<tr><th>Function No.</th><th>Setting (The default is Highlighted .)</th></tr>
<tr><td>U-7</td><td><Auto Power OFF Disabling>
Select whether to enable or disable the setting of “0: Disabled” for “Auto Power OFF Timing” available from the User mode.
<table><tr><td>Data</td><td>0</td><td>1</td></tr><tr><td>Description</td><td>Disabled</td><td>Enabled</td></tr></table></td></tr>
<tr><td>U-9
*For 23 cpm Copier only</td><td><File Margin>
Select the margin making method in the File Margin mode.
<table><tr><td>Data</td><td>0</td><td>1</td></tr><tr><td>Description</td><td>File Margin mode when the original has a file margin.</td><td>File Margin mode when the original does not have a file margin.</td></tr></table></td></tr>
<tr><td>U-10
*For 23 cpm Copier only</td><td><Priority Paper Size/Source>
Select the priority paper size or paper source selected when the copier is set into the AMS or Manual mode.
<table><tr><th>Data</th><th>Description</th><th>Data</th><th>Description</th></tr><tr><td>0</td><td>A3 (L)</td><td>10</td><td>11” × 17” (L)</td></tr><tr><td>1</td><td>B4 (L)</td><td>11</td><td>11” × 14” (L)</td></tr><tr><td>2</td><td>A4 (L)</td><td>12</td><td>Legal (L)</td></tr><tr><td>3</td><td>B5 (L)</td><td>13</td><td>Letter (L)</td></tr><tr><td>4</td><td>A5 (L)</td><td>14</td><td>5-1/2” × 8-1/2” (L)</td></tr><tr><td>5</td><td>FLS (L)</td><td>15</td><td>Letter (C)</td></tr><tr><td>6</td><td>A4 (C)</td><td>20</td><td>1st Drawer</td></tr><tr><td>7</td><td>B5 (C)</td><td>21</td><td>2nd Drawer</td></tr><tr><td></td><td></td><td>22</td><td>3rd Drawer</td></tr><tr><td></td><td></td><td>23</td><td>4th Drawer</td></tr></table>Default: 15 (inch areas) / 6 (metric areas)
L: lengthwise; C: crosswise
NOTE
If a paper size or source that does not exist is selected, the 1st Drawer (20) is automatically selected.</td></tr>
<tr><td>U-12
**For 18/23 cpm Copier only</td><td><APS/AMS/Manual Priority>
Select the priority copying mode that is automatically selected when the Power Switch is turned ON or Panel Reset key is pressed.
[23 cpm Copier]
<table><tr><td>Data</td><td>0</td><td>1</td><td>2</td></tr><tr><td>Description</td><td>APS</td><td>AMS</td><td>Manual</td></tr></table>[18 cpm Copier]
<table><tr><td>Data</td><td>1</td><td>2</td></tr><tr><td>Description</td><td>AMS</td><td>Manual</td></tr></table></td></tr>
</table>

[User Mode]

<table>
<tr><th>Function No.</th><th>Setting (The default is Highlighted .)</th></tr>
<tr><td>U-13</td><td>
<Optimum Exposure Level>
Determine the optimum exposure level in the Auto as well as the Manual Exposure mode.
<table>
<tr><th>Data</th><th>Description</th><th>Data</th><th>Description</th></tr>
<tr><td>46</td><td>Low level 4: – 2.0 steps</td><td>50</td><td>Standard ±0 steps</td></tr>
<tr><td>47</td><td>Low level 3: – 1.5 steps</td><td>51</td><td>High level 1: +0.5 steps</td></tr>
<tr><td>48</td><td>Low level 2: – 1.0 steps</td><td>52</td><td>High level 2: +1.0 steps</td></tr>
<tr><td>49</td><td>Low level 1: – 0.5 steps</td><td></td><td></td></tr>
</table>
</td></tr>
<tr><td>U-14</td><td>
<Priority Manual Exposure Level>
Determine the priority exposure level for the Manual Exposure mode. The level determines the priority exposure level selected when the exposure mode is switched from the initial Auto to Manual, and when Manual Exposure is initially selected when power is turned ON.
<table>
<tr><th colspan="2">[Auto ▶ Manual]</th><th colspan="2">[Manual]</th></tr>
<tr><th>Data</th><th>Description</th><th>Data</th><th>Description</th></tr>
<tr><td>0</td><td>Auto ▶ EXP.1</td><td>10</td><td>Manual EXP.1</td></tr>
<tr><td>1</td><td>Auto ▶ EXP.2</td><td>11</td><td>Manual EXP.2</td></tr>
<tr><td>2</td><td>Auto ▶ EXP.3</td><td>12</td><td>Manual EXP.3</td></tr>
<tr><td>3</td><td>Auto ▶ EXP.4</td><td>13</td><td>Manual EXP.4</td></tr>
<tr><td>4</td><td>Auto ▶ EXP.5</td><td>14</td><td>Manual EXP.5</td></tr>
<tr><td>5</td><td>Auto ▶ EXP.6</td><td>15</td><td>Manual EXP.6</td></tr>
<tr><td>6</td><td>Auto ▶ EXP.7</td><td>16</td><td>Manual EXP.7</td></tr>
<tr><td>7</td><td>Auto ▶ EXP.8</td><td>17</td><td>Manual EXP.8</td></tr>
<tr><td>8</td><td>Auto ▶ EXP.9</td><td>18</td><td>Manual EXP.9</td></tr>
</table>
</td></tr>
<tr><td>U-15
**For 18/23 cpm Copier only</td><td>
<Finishing Mode Priority>
Determine the priority finishing mode selected when the copier is equipped with a finishing option.
[23 cpm Copier]
<table>
<tr><td>Data</td><td>0</td><td>1</td><td>2</td><td>3</td></tr>
<tr><td>Description</td><td>Non-Sort</td><td>Sort</td><td>Group</td><td>Sort-and-Staple</td></tr>
</table>
[18 cpm Copier]
<table>
<tr><td>Data</td><td>0</td><td>1</td></tr>
<tr><td>Description</td><td>Non-Sort</td><td>Sort</td></tr>
</table>
</td></tr>
</table>

[User Mode]

<table>
<tr><th>Function No.</th><th>Setting (The default is Highlighted .)</th></tr>
<tr><td>U-18
*For 23 cpm Copier only</td><td>
<Priority Orig. ▶ Copy Type>
Determine the orig. ▶ copy type automatically selected when the Power Switch is turned ON or Panel Reset key is pressed. The setting made in “C-40 (Orig. ▶ Copy Type)” available as one of the Tech. Rep. Choice functions determines the details of orig. ▶ copy type selected by the setting of this function.
[When “0” is set for C-40]
<table>
<tr><th>Data</th><th>Description</th></tr>
<tr><td>0</td><td>1 ➡ 1</td></tr>
<tr><td>1</td><td>1 ➡ 2</td></tr>
<tr><td>2</td><td>2 ➡ 2</td></tr>
<tr><td>3</td><td>1 ➡ 1 2in1</td></tr>
<tr><td>4</td><td>1 ➡ 2 2in1</td></tr>
</table>
[When “1” is set for C-40]
<table>
<tr><th>Data</th><th>Description</th></tr>
<tr><td>0</td><td>1 ➡ 2</td></tr>
<tr><td>1</td><td>1 ➡ 2</td></tr>
<tr><td>2</td><td>2 ➡ 2</td></tr>
<tr><td>3</td><td>1 ➡ 2 2in1</td></tr>
<tr><td>4</td><td>1 ➡ 2 2in1</td></tr>
</table>
NOTE
2in1 = Enabled when an ADF is mounted.
2 = Enabled when a Duplex Unit is mounted.
</td></tr>
<tr><td>U-20</td><td>
<Auto Clear ON/OFF>
Select whether or not to activate the auto clear (panel reset) function after the lapse of a given period of time after a copy cycle has been completed or a key on the control panel has been operated.
<table>
<tr><td>Data</td><td>0</td><td>1</td><td>2</td></tr>
<tr><td>Description</td><td>Disabled</td><td>Enabled: 30 sec.</td><td>Enabled: 1 min.</td></tr>
</table>
</td></tr>
<tr><td>U-21</td><td>
<Energy Saver ON Timing>
Select whether or not to set the copier into the Energy Saver mode after the lapse of a given period of time after a copy cycle has been completed or a key on the control panel has been operated.
<table>
<tr><th>Data</th><th>Description</th><th>Data</th><th>Description</th></tr>
<tr><td>1</td><td>Enabled: 1 min.</td><td>.</td><td>.</td></tr>
<tr><td>2</td><td>Enabled: 2 min.</td><td>.</td><td>.</td></tr>
<tr><td>.</td><td>.</td><td>.</td><td>.</td></tr>
<tr><td>.</td><td>.</td><td>97</td><td>Enabled: 97 min.</td></tr>
<tr><td>.</td><td>.</td><td>98</td><td>Enabled: 98 min.</td></tr>
<tr><td>15</td><td>Enabled: 15 min.</td><td>99</td><td>Enabled: 240 min.</td></tr>
</table>
NOTE
Except for 99, the setting data equals the time in minutes.
</td></tr>
</table>

[User Mode]

<table>
<tr><th>Function No.</th><th>Setting (The default is Highlighted .)</th></tr>
<tr><td>U-23
**For 18/23 cpm Copier only</td><td><Auto Clear for Plug-In Counter>
Select whether to activate the auto clear (panel reset) function when the Plug-In Counter is pulled out.
<table><tr><td>Data</td><td>0</td><td>1</td></tr><tr><td>Description</td><td>Auto clear is not activated.</td><td>Auto clear is activated.</td></tr></table></td></tr>
<tr><td>U-24
**For 18/23 cpm Copier only</td><td><Sort/Non-Sort Switching ON/OFF>
Select whether to enable or disable the function that automatically switches between the Sort and Non-Sort mode depending on the number of originals loaded in the ADF when the copier is equipped with an ADF and finishing option.
<table><tr><td>Data</td><td>0</td><td>1</td></tr><tr><td>Description</td><td>OFF (disabled)</td><td>ON (enabled)</td></tr></table></td></tr>
<tr><td>U-28</td><td><Auto Power OFF Timing>
Select whether or not to enable the auto power OFF function that turns power off automatically after the lapse of a given period of time after a copy cycle has been completed or a key on the control panel has been operated.
<table><tr><th>Data</th><th>Description</th><th>Data</th><th>Description</th></tr><tr><td>0
1
2
.
.
*30</td><td>Disabled
Enabled: 1 min.
Enabled: 2 min.
.
.
Enabled: 30 min.</td><td>*60
.
.
97
98
99</td><td>Enabled: 60 min.
.
.
Enabled: 97 min.
Enabled: 98 min.
Enabled: 240 min.</td></tr></table>*30: 15/18 cpm Copier 60: 23 cpm Copier
NOTES
1. Except for 0 and 99, the setting data equals the time in minutes.
2. “0” cannot be selected for this function if U-7 (Auto Power OFF Disabling) available as one of the User Mode functions is set to “0.”</td></tr>
<tr><td>U-51 to 54
*For 23 cpm Copier only</td><td><Special Paper Setting>
Designates each drawer of the copier for special paper.
U-51: 1st Drawer
U-52: 2nd Drawer
U-53: 3rd Drawer
U-54: 4th Drawer
<table><tr><td>Data</td><td>0</td><td>1</td></tr><tr><td>Description</td><td>Plain paper</td><td>Special paper</td></tr></table>NOTE
The APS mode is disabled if “1” is set.</td></tr>
</table>

5 SERVICE MODE

- This mode is used by the Tech. Rep. to set, check, adjust, and/or program various service functions.

5-1. Service Mode Function Tree

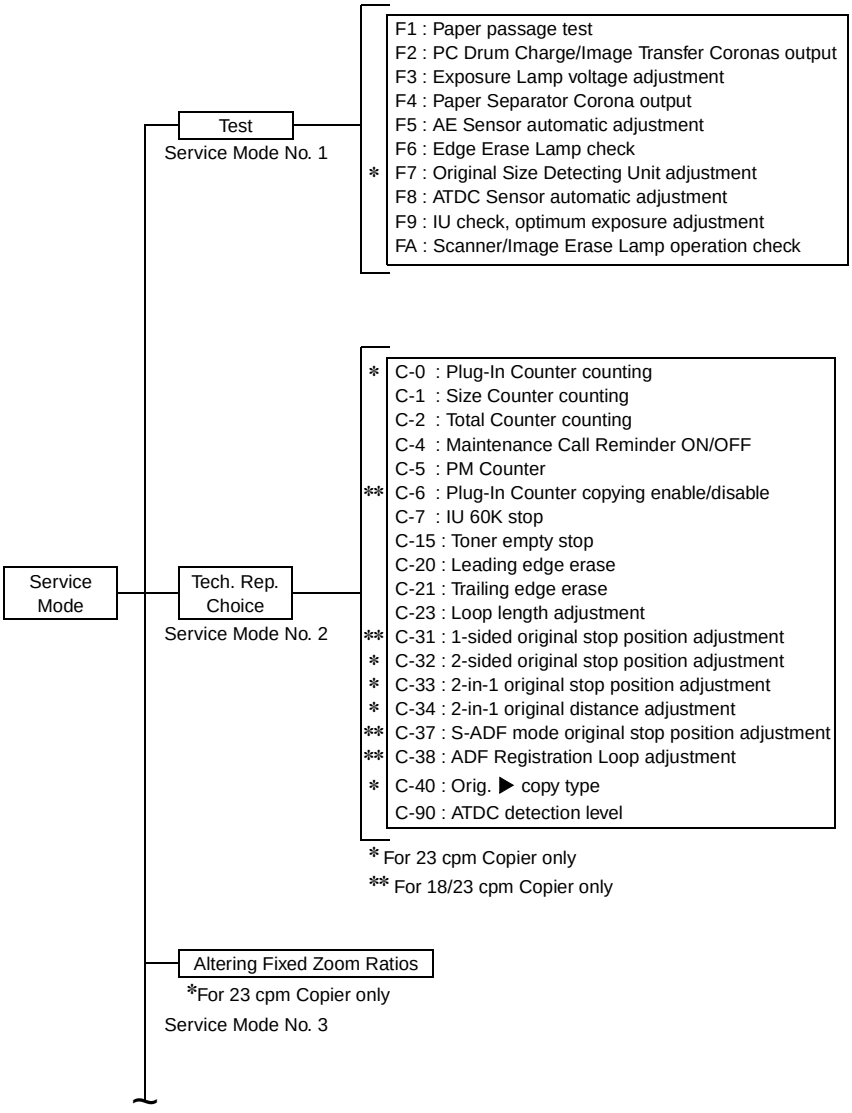

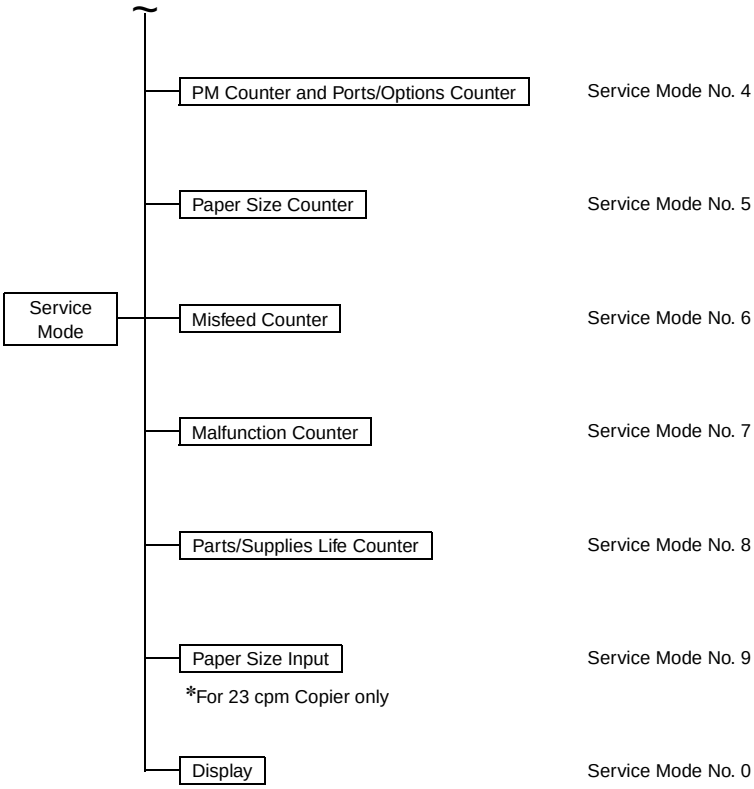

5-2. Entering the Service Mode

<Procedure>

1. Press the Meter Count key. Then, press the following keys in this order.

   Press the Stop key. ➡ Press “0.” ➡ Press “0.” ➡ Press the Stop key. ➡ Press “0.” ➡ Press “1.”

2. From the 10-Keys, press the number corresponding to the service mode no. assigned.
3. Perform the necessary steps for the function selected.

<Leaving the Service Mode>

- Press the Panel Reset key twice to go back to the Basic screen.

5-3. Settings in the Service Mode

(1) Test

- This function allows the Tech. Rep. to perform various functional tests and adjustments.

<Setting Procedure>
1. Enter the number assigned to the desired test from the 10-Keys. (The number appears on the Multi-Copy Display.)
2. Press the Start key to start the test.
3. Press the Stop key to stop the test.

<Test Copy>
- A test copy can be made by entering “F3, F5” of the Test No., holding down the Stop key and pressing the Start key.

<Leaving the Function>
- Press the Panel Reset key twice to go back to the Basic screen.

[Service Mode ▶ Test]

Test No.	Description
F1	<Paper Passage Test> A paper passage test is carried out to check for correct sensor operation without having to wait for the copier to complete warming up. It provides the following two modes: 1. Normal mode (The Zoom Ratio Indicator shows “On.”) 2. Load OFF mode, in which some parts are put in an inactive state (The Zoom Ratio Indicator shows “Off.”) <Procedure> 1. Using the Zoom Up/Down key, select either one of the two modes. 2. Press the Start key. <To quit> • Press the Stop key, or the test stops when paper runs out.
F2	<PC Drum Charge/Image Transfer Coronas Output> Do not use this test as it is only for factory adjustment.
F3	<Exposure Lamp Voltage Adjustment> This test allows the Tech. Rep. to adjust the maximum Exposure Lamp voltage and the optimum exposure setting in the Manual Exposure mode. (It runs for 30 sec.) ***NOTE*** *For details, see DIS/REASSEMBLY, ADJUSTMENT.*
F4	<Paper Separator Corona Output> Do not use this test as it is only for factory adjustment.
F5	<AE Sensor Automatic Adjustment> This test automatically adjusts the AE Sensor. (It runs for 5 sec.) ***NOTE*** *For details, see DIS/REASSEMBLY, ADJUSTMENT.*

[Service Mode ▶ Test]

Test No.	Description
F6	<Image Erase Lamp Check> This test checks whether the Image Erase Lamp turns ON and OFF properly. (It runs for one complete copy cycle.) <Procedure> • Press the Start key after the copier has completed warming up. This causes the lamp to make a checkered pattern.
F7 *For 23 cpm Copier only	<Original Size Detecting Unit Adjustment> This test automatically adjusts the Original Size Detecting Sensors, starting when the Start key is pressed. (It runs for 5 sec.)
F8	<ATDC Sensor Automatic Adjustment> This test automatically adjusts the ATDC Sensor. (It runs for about 5 min.) ***NOTE*** *For details, see DIS/REASSEMBLY, ADJUSTMENT.*
F9	<IU Check, Optimum Exposure Adjustment> Do not use this test as it is only for factory adjustment.
FA	<Scanner/Image Erase Lamp Operation Check> Do not use this test as it is only for factory adjustment.

– Components Energized in the Tests –

Component \ Test Operation	F1	F2	F3	F4	F5	F6	F7	F8	F9	FA
Main Drive Motor	❍	❍	❍	❍	❍	❍	–	❍	❍	–
PC Drum Drive Motor	❍	❍	❍	❍	❍	❍	–	❍	❍	–
Fan Motors	❍	❍	❍	❍	❍	❍	–	❍	❍	–
Toner Replenishing Motor	–	–	–	–	–	–	–	❍	–	–
HV (PC Drum Charge, Image Transfer, grid)	✻	❍	–	–	–	❍	–	❍	❍	–
Bias (Developing, Separator, seal)	✻	–	❍	❍	❍	❍	–	❍	❍	–
Scanner	❍	–	✻	–	✻	❍	–	–	❍	❍
Paper Take-Up Roll	❍	–	–	–	–	❍	–	–	–	–
Paper Transport Rollers	❍	–	–	–	–	❍	–	–	–	–
Synchronizing Rollers	❍	–	–	–	–	❍	–	–	–	–
Exposure Lamp	✻	–	❍	–	❍	❍	–	–	❍	–
Main Erase Lamp	❍	❍	❍	❍	❍	❍	–	❍	❍	–
Image Erase Lamp	✻	–	❍	❍	❍	✻	–	❍	–	❍
PC Drum Paper Separator Fingers	❍	–	–	–	–	❍	–	–	–	–
Misfeed detection	❍	–	–	–	–	❍	–	–	–	–
Malfunction detection	❍	❍	❍	❍	❍	❍	❍	❍	❍	❍

❍ : Energized – : Remain deenergized

*F1 : Deenergized in the load OFF mode.

*F3/5 : The Scanner stops at the TRON position.

*F6 : Turned ON and OFF alternately to make a checkered pattern.

(2) Tech. Rep. Choice

- This function allows the Tech. Rep. to make various settings and adjustments.

<Setting Procedure>

1. Press “2” from the 10-Keys. (The Zoom Ratio Indicator shows “C.”)
2. Press the number assigned to the desired Tech. Rep. Choice. (The Zoom Ratio Indicator shows “C” plus the number of the chosen function.)
3. Press the Start key. (The Multi-Copy Display shows the current setting for the chosen function.)
4. Clear the current setting using the Clear key and enter the new setting from the 10-Key Pad.
5. Press the Start key to validate the new setting.

NOTE
If the setting is illegal, it is not validated and is shown blinking.

<Test Copy>

- A test copy can be made by entering “C” of the Tech. Rep. Choice No., holding down the Stop key and pressing the Start key.

<Leaving the Function>

- Press the Panel Reset key twice to go back to the Basic screen.

[Service Mode ▶ Tech. Rep. Choice]

<table>
<tr><th>Choice No.</th><th>Setting (The default is Highlighted .)</th></tr>
<tr><td>C-0
*For 23 cpm Copier only</td><td><Plug-In Counter Counting>
Select the condition by which the Plug-In Counter count is increased.
<table>
<tr><td>Data</td><td>0</td><td>1</td></tr>
<tr><td>Description</td><td>Counts the number of sheets of paper fed out.</td><td>Counts the number of copy processes carried out.</td></tr>
</table>
NOTE
See the Count-up Table for details.</td></tr>
<tr><td>C-1</td><td><Size Counter Counting>
Select the size of the paper to be counted by the Size Counter.
<table>
<tr><td>Data</td><td>0</td><td>1</td><td>2</td><td>3</td></tr>
<tr><td>Description (Metric areas)</td><td>No count</td><td>A3</td><td>A3/B4</td><td>A3/B4/FLS</td></tr>
<tr><td>Description (Inch areas)</td><td>No count</td><td>11” × 17”</td><td>11” × 17”, 8-1/2” × 14”</td><td>11” × 17”, 8-1/2” × 14”, 11” × 14”</td></tr>
</table>
NOTE
See the Count-up Table for details.</td></tr>
</table>

[Service Mode ▶ Tech. Rep. Choice]

<table>
<tr><th>Choice No.</th><th>Setting (The default is Highlighted .)</th></tr>
<tr><td>C-2</td><td>
<Total Counter Counting>
Select the conditions (paper size and 2-sided copying) by which the Total Counter count is increased.
<table>
<tr><td>Data</td><td>0</td><td>1</td><td>2</td></tr>
<tr><td>Description</td><td>1 count per 1 copy cycle</td><td>Multiple count-up</td><td>Multiple count-up</td></tr>
</table>
NOTE
See the Count-up Table for details.
</td></tr>
<tr><td></td><td>
<Count-up Table>
<table>
<tr><td colspan="2">Copying</td><td colspan="3">1-Sided</td><td colspan="3">1-Sided</td><td colspan="3">2-Sided</td><td colspan="3">2-Sided</td><td rowspan="3">Manual Bypass</td></tr>
<tr><td colspan="2">Size</td><td colspan="2">Sizes other than those set</td><td></td><td colspan="3">Set sizes</td><td colspan="2">Sizes other than those set</td><td></td><td colspan="3">Set sizes</td></tr>
<tr><td colspan="2">Total</td><td colspan="2">Mode</td><td></td><td colspan="3">Mode</td><td colspan="2">Mode</td><td></td><td colspan="3">Mode</td></tr>
<tr><td colspan="2"></td><td>0</td><td>1</td><td>2</td><td>0</td><td>1</td><td>2</td><td>0</td><td>1</td><td>2</td><td>0</td><td>1</td><td>2</td></tr>
<tr><td colspan="2">Total (mechanical, electronic)</td><td colspan="3">1</td><td>1</td><td>2</td><td>2</td><td colspan="3">2</td><td>2</td><td>4</td><td>4</td><td>1</td></tr>
<tr><td colspan="2">Size (electronic)</td><td colspan="3">0</td><td>1</td><td>1</td><td>2</td><td colspan="3">0</td><td>2</td><td>2</td><td>0</td><td>0</td></tr>
<tr><td colspan="2">2-Sided Total (electronic)</td><td colspan="3">0</td><td colspan="3">0</td><td>1</td><td>1</td><td>2</td><td>1</td><td>1</td><td>4</td><td>0</td></tr>
<tr><td colspan="2">2-Sided Size (electronic)</td><td colspan="3">0</td><td colspan="3">0</td><td colspan="3">0</td><td>1</td><td>1</td><td>4</td><td>0</td></tr>
<tr><td rowspan="2">Plug-In (mechanical)</td><td>Counting copies</td><td colspan="3">1</td><td>1</td><td>2</td><td>2</td><td>1</td><td>2</td><td>2</td><td>1</td><td>4</td><td>4</td><td>1</td></tr>
<tr><td>Counting copy cycles</td><td colspan="3">1</td><td>1</td><td>2</td><td>2</td><td colspan="3">2</td><td>2</td><td>4</td><td>4</td><td>1</td></tr>
</table>
0: No count 1: 1 count 2: 2 counts 4: 4 counts
</td></tr>
<tr><td>C-4</td><td>
<Maintenance Call Reminder ON/OFF>
Select whether to enable or disable the maintenance call reminder.
<table>
<tr><td>Data</td><td>0</td><td>1</td></tr>
<tr><td>Description</td><td>The maintenance call reminder is not given.</td><td>The maintenance call reminder is given.</td></tr>
</table>
</td></tr>
</table>

[Service Mode ▶ Tech. Rep. Choice]

<table>
<tr><th>Choice No.</th><th>Setting (The default is Highlighted .)</th></tr>
<tr><td>C-5</td><td><PM Counter>
Select either PM Counter or Copy Kit Counter.
<table>
<tr><th>Data</th><th>Description</th></tr>
<tr><td>0</td><td>PM Counter</td></tr>
<tr><td>1</td><td>Copy Kit Counter: Copying not inhibited after the counter has counted down to zero.</td></tr>
<tr><td>2</td><td>Copy Kit Counter: Copying inhibited after the counter has counted down to zero.</td></tr>
</table>
NOTE
If this function is set to “2,” the copier gives an indication to replace the IU and inhibits the initiation of a new copy cycle even if C-4 is set to “0.”</td></tr>
<tr><td>C-6
**For 18/23 cpm Copier only</td><td><Plug-In Counter Copying Enable/Disable>
Select whether to enable or disable copying according to whether the Plug-In Counter is plugged in or not.
<table>
<tr><th>Data</th><th>0</th><th>1</th></tr>
<tr><td>Description</td><td>Permits copying even when the Plug-In Counter is not plugged in.</td><td>Inhibits copying when the Plug-In Counter is not plugged in.</td></tr>
</table>
NOTE
Be sure to set this function to “1” when the Plug-In Counter is installed.</td></tr>
<tr><td>C-7</td><td><IU 60K Stop>
Select whether or not to inhibit copying when IU Counter has counted 60K.
<table>
<tr><th>Data</th><th>0</th><th>1</th></tr>
<tr><td>Description</td><td>Permits copying.</td><td>Inhibits copying.</td></tr>
</table>
Default: 0 (inch areas) / 1 (metric areas)</td></tr>
<tr><td>C-15</td><td><Toner Empty Stop>
Select whether or not to inhibit copying when a toner-empty condition is detected.
<table>
<tr><th>Data</th><th>0</th><th>1</th></tr>
<tr><td>Description</td><td>Permits copying.</td><td>Inhibits copying.</td></tr>
</table>
NOTE
If “1” is set, the copier inhibits copying when it detects a T/C of 3.5% or lower.</td></tr>
</table>

[Service Mode ▶ Tech. Rep. Choice]

<table>
<tr><th>Choice No.</th><th>Setting (The default is Highlighted .)</th></tr>
<tr><td>C-20</td><td><Leading Edge Erase>
Varies the width of erase on the leading edge.
<table>
<tr><td>Data</td><td>0</td><td>1</td></tr>
<tr><td>Description</td><td>Smaller width</td><td>Greater width</td></tr>
</table>
NOTE
When the setting is changed, it results in the erase width being changed by about 3 mm.</td></tr>
<tr><td>C-21</td><td><Trailing Edge Erase>
Varies the width of erase on the trailing edge.
<table>
<tr><td>Data</td><td>0</td><td>1</td></tr>
<tr><td>Description</td><td>Smaller width</td><td>Greater width</td></tr>
</table>
NOTE
When the setting is changed, it results in the erase width being changed by about 3 mm.</td></tr>
<tr><td>C-23</td><td><Loop Length Adjustment>
Adjust the length of the loop to be formed in paper before the Synchronizing Rollers.
<table>
<tr><th>Data</th><th>Description</th><th>Data</th><th>Description</th></tr>
<tr><td>47</td><td>Loop length about 4.9 mm</td><td>51</td><td>Loop length about 7.7 mm</td></tr>
<tr><td>48</td><td>Loop length about 5.6 mm</td><td>52</td><td>Loop length about 8.4 mm</td></tr>
<tr><td>49</td><td>Loop length about 6.3 mm</td><td>53</td><td>Loop length about 9.1 mm</td></tr>
<tr><td>50</td><td>Loop length about 7.0 mm</td><td></td><td></td></tr>
</table></td></tr>
<tr><td>C-31 to 34
*For 23 cpm Copier only
**For 18/23 cpm Copier only</td><td><Original Stop Position Adjustment>
Adjust the position at which to stop the original in each of the following ADF modes.
**C-31: 1-sided original stop position adjustment
*C-32: 2-sided original stop position adjustment
*C-33: 2-in-1 original stop position adjustment
*C-34: 2-in-1 original distance adjustment
**C-37: S-ADF mode original stop position adjustment
**C-38: ADF Registration Loop adjustment
<table>
<tr><td>Data</td><td>43.....50.....58</td></tr>
<tr><td>Adjustment Value</td><td>–7 mm.....±0 mm.....+8 mm</td></tr>
</table>
NOTE
The stop position is farther away from the Original Width Scale (or a greater distance between 2-in-1 originals) in the + direction.</td></tr>
</table>

[Service Mode ▶ Tech. Rep. Choice]

<table>
<tr><th>Choice No.</th><th>Setting (The default is Highlighted .)</th></tr>
<tr><td>C-40
*For 23 cpm Copier only</td><td><Orig. ▶ Copy Type>
Determine the orig. ▶ copy types that can be selected in the “Priority Orig. ▶ Copy Type” available from the User mode.
<table>
<tr><th>Data</th><th>0</th><th>1</th></tr>
<tr><td>Description</td><td>All orig. ▶ copy types can be selected.</td><td>Only the types involving 2-sided copy can be selected.</td></tr>
</table></td></tr>
<tr><td>C-90</td><td><ATDC Detection Level>
Select the ATDC control level (T/C ratio).
<table>
<tr><th>Data</th><th>Description</th><th>Data</th><th>Description</th></tr>
<tr><td>48</td><td>T/C ratio 5.0 %</td><td>51</td><td>T/C ratio 6.5 %</td></tr>
<tr><td>49</td><td>T/C ratio 5.5 %</td><td>52</td><td>T/C ratio 7.0 %</td></tr>
<tr><td>50</td><td>T/C ratio 6.0 %</td><td>53</td><td>T/C ratio 7.5 %</td></tr>
</table></td></tr>
</table>

(3) Altering Fixed Zoom Ratios (For 23 cpm Copier Only)

- This function allows the Tech. Rep. to change the fixed zoom ratios over the range between ×0.500 and ×2.000 according to the needs of the user.

<Setting Procedure>

1. Select the Altering Fixed Zoom Ratios function.
2. Select the particular fixed zoom ratio to be changed and press the Clear key to clear it.

NOTE

If the zoom ratio is cleared mistakenly, press the Panel Reset key to undo the clearing operation.

3. Enter the desired zoom ratio from the 10-Keys.
4. Press the Start key to validate the new zoom ratio.

(4) PM Counter and Ports/Options Counter

- This function shows the counts of the PM Counter (IU) and Ports/Options Counter. The particular port or option is indicated by the corresponding LED of the Misfeed Monitor. The count is shown across the “Zoom Ratio Indicator” and “Multi-Copy Display.”

NOTE

The PM Counter is indicated by the IU Service Life Indicator LED.

Example) Count: 12345

Multi-Copy Display	Zoom Ratio Indicator
123	45

Counting System

- PM Counter: Count-down type (When the counter has counted down to zero, a – (minus) sign appears in the Zoom Ratio Indicator and the count is thereafter incremented.
- Ports/Options Counter: Count-up type

<Setting Procedure>

1. Select the PM Counter and Ports/Options Counter function.
2. Each press of the Paper Select key lights up a new LED representing the new counter in the following order.

[23 cpm Copier]

Order	Description	Order	Description
1	PM Counter	6	Manual bypass
2	1st Drawer	7	Duplex take-up
3	2nd Drawer	8	Sorter
4	3rd Drawer (Paper Feed Cabinet)	9	Stapling
5	4th Drawer (Paper Feed Cabinet)	10	ADF

NOTE

PF-112, if the copier is so equipped, is indicated by the 3rd Drawer LED only.

[18 cpm Copier]

Order	Description
1	PM Counter
2	Copier paper source
3	Manual bypass
4	Sorter
5	ADF

[15 cpm Copier]

Order	Description
1	PM Counter
2	Copier paper source
3	Manual bypass

<Setting a PM Counter Count>
1. Show the count of the PM Counter (IU Service Life Indicator) and clear it.
2. Enter the desired count from the 10-Keys.

NOTE
Press the Stop key to undo the clearing command.

3. Press the Start key to validate the new count setting.

<Clearing a Count>
- Show the count of the counter to be cleared and press the Clear key. If a count is mistakenly cleared, press the Stop key to undo the clearing command.

(5) Paper Size Counter

- This function shows the counts of different sizes of paper.
  The paper size is indicated by the Paper Select LED. The count is shown across the "Zoom Ratio Indicator" and "Multi-Copy Display."

Example
Count: 12345

Multi-Copy Display
123

Zoom Ratio Indicator
45

<Setting Procedure>
1. Select the Paper Size Counter function.
2. Each press of the Paper Select key lights up a new LED representing the new counter in the following order.

[23 cpm Copier: Metric areas]

Order	Description
1	A3
2	A4
3	A5
4	B4
5	FLS
6	Inch

[23 cpm Copier: Inch areas]

Order	Description
1	Legal
2	Letter
3	11" × 17"
4	11" × 14"
5	Invoice
6	Metric

[15/18 cpm Copier: Metric areas]

Order	Description
1	A3
2	A4
3	A5
4	B4
5	FLS
6	Inch

[15/18 cpm Copier: Inch areas]

Order	Description
1	Legal
2	Letter
3	11" × 17"
4	11" × 14"
5	Invoice
6	Metric

<Clearing a Count>
- Show the count of the counter to be cleared and press the Clear key. If a count is mistakenly cleared, press the Stop key to undo the clearing command.

(6) Misfeed Counter

- This function shows the number of misfeeds that have occurred at different locations in the copier (count-up type counter). The Monitor Display tells the location of the misfeed by a lit LED. The count is shown on the Zoom Ratio Indicator and the misfeed code is given on the Multi-Copy Display.

Example
Misfeed location: Manual bypass
Count: 123

Zoom Ratio Indicator
123

Multi-Copy Display
J

<Setting Procedure>
1. Select the Misfeed Counter function.
2. Each press of the Paper Select key lights up a new LED representing the new counter in the following order.

[23 cpm Copier]

Order	Description		Order	Description	
1	Manual bypass	J	10	Storage/transport	J
2	1st Drawer	J	11	Storage	J
3	2nd Drawer	J	12	Sorter	J
4	3rd Drawer (Paper Feed Cabinet)	J	13	ADF (take-up)	JA
5	4th Drawer (Paper Feed Cabinet)	J	14	ADF (transport)	Jb
6	Duplex take-up/transport	J	15	ADF (exit)	Jc
7	Paper take-up/transport	J	16	ADF (turnover)	Jd
8	Separator	J	17	ADF (single feed)	JE
9	Exit	J			

NOTE
PF-112, if the copier is so equipped, is indicated by the 3rd Drawer LED.

[15 cpm Copier]

Order	Description	
1	Manual bypass	J0
2	Copier paper take-up/ transport	J0
3	Take-up/transport	J1
4	Separator	J2
5	Exit	J3
6	Sorter	J
7	ADF	JA~JE

[18 cpm Copier]

Order	Description	
1	Manual bypass	J0
2	Copier paper take-up/ transport	J0
3	Take-up/transport	J1
4	Separator	J2
5	Exit	J3

<Clearing a Count>
- Show the count of the counter to be cleared and press the Clear key. If a count is mistakenly cleared, press the Stop key to undo the clearing command.

(7) Malfunction Counter

- This function shows the number of malfunctions that have occurred at different locations in the copier (count-up type counter). The Zoom Ratio Indicator shows the malfunction code, while the Multi-Copy Display shows the count.

Example
ATDC Sensor malfunction (F30)
Count: 12

Zoom Ratio Indicator	Multi-Copy Display
F30	12

<Setting Procedure>

1. Select the Malfunction Counter function.
2. Each press of the Paper Select key shows the count of a new counter in the following order.

NOTE
The count is given only if it is not "0." If all counts are "0," the message "All 0" is shown.

Order	Malfunction Code	Description
1	000	A Main Drive Motor malfunction
2	010	A PC Drive Moter malfunction
3	04C	A Cooling Fan Motor malfunction
4	070	A Toner Replenishing Motor malfunction
5	400	An Exposure Lamp malfunction
6	500	An abnormally low fusing temperature during warm-up
7	510	An abnormally low fusing temperature after completion of warm-up
8	520	An abnormally high fusing temperature
9	600	A Scanner drive system malfunction
10	610	A Lens drive system malfunction
11	620	A Mirror drive system malfunction
12	900	A 1st Drawer malfunction
13	950	A 2nd Drawer malfunction
14	990	A Paper Feed Cabinet Main Tray malfunction
15	998	A Paper Feed Cabinet Shift Tray malfunction
16	99E	A Paper Feed Cabinet
17	F02	An Original Size Detecting Unit malfunction
18	F10	An AE Sensor malfunction
19	F30	An ATDC Sensor malfunction
20	F79	A Paper Empty Sensor malfunction
21	FE1	An Original Size Detecting Sensor malfunction
22	b10	A Sorter Paper Clamp Unit moving malfunction
23	b30	A Sorter Paper Aligning Motor malfunction
24	b50	A Sorter Staple Unit malfunction
25	b60	A Sorter Bin moving mechanism malfunction
26	d00	A Duplex Unit Guide Plates malfunction
27	d20	A Duplex Unit entrance port switching failure
28	d50	A Duplex Drive Motor malfunction
29	E1	A starter charging failure
30	E2	An ATDC automatic adjustment/IU fuse blowing failure
31	Ar1	Copier watchdog
32	Ar2	ADF watchdog
33	Ar3	Sorter watchdog

✻ For 18 cpm Copier, the counter counts are shown in the order of 1 to 11, 18, 19, 25 and 29 to 33.
15 cpm Copier, the counter counts are shown in the order of 1 to 11, 18, 19 and 29 to 31.

<Clearing a Count>

- Show the count of the counter to be cleared and press the Clear key. If a count is mistakenly cleared, press the Stop key to undo the clearing command.

(8) Parts/Supplies Life Counter

- This function shows the number of copy processes to which different parts or supplies have been subjected (count-up type). Each count is given as shown below.

Example
IU Counter
Count: 1234567

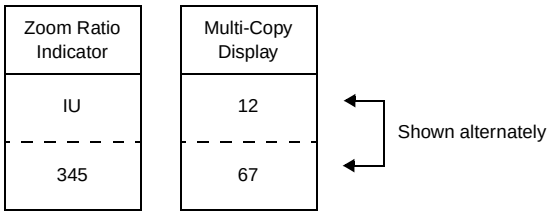

<Setting Procedure>
1. Select the Parts/Supplies Life Counter function.
2. Each press of the Paper Select key shows the count of a new counter in the following order.

Order	Zoom Ratio Indicator	Description
1	IU	IU Counter
2	Pc	PC Drum Counter
3	St	Developer Counter
4	Cb	Cleaning Blade Counter
5	Fu	Fusing Unit Counter

<Clearing a Count>
- Show the count of the counter to be cleared and press the Clear key. If a count is mistakenly cleared, press the Stop key to undo the clearing command.

NOTE
The IU Counter cannot be cleared under this function. However, the counts of all counters except the Fusing Unit Counter under this counter function are cleared when the starter charging sequence is completed.

(9) Paper Size Input (For 23 cpm Copier Only)

- This function allows the Tech. Rep. to enter the size of the paper loaded in each drawer (except the 1st Drawer which is a Universal Tray).

<Setting Procedure>

1. Select the Paper Size Input function.
2. Each press of the Paper Select key shows a new paper size in the following order.

Order	Zoom Ratio Indicator	Multi-Copy Display	Description
1	Current paper size	2F	2nd Drawer length
2		2C	2nd Drawer width
3		3F	3rd Drawer (Paper Feed Cabinet) length
4		3C	3rd Drawer (Paper Feed Cabinet) width
5		4F	4th Drawer (Paper Feed Cabinet) length
6		4C	4th Drawer (Paper Feed Cabinet) width
7		5F	(Japan Only)
8		5C	(Japan Only)

NOTE
For PF-112, use 3F and 3C for the size input.

3. Show the paper size to be set and press the Clear key to clear the current size.
4. From the 10-Keys, enter the new paper size.

(10) Display

- This function is used to check the time it takes the copier to complete different functions and to make a control panel display test and sensor check.

<Setting Procedure>

1. Select the Display function.
2. From the 10-Keys, enter the number (0, 1, 2, 6, or 7) corresponding to the item to be checked/set.

[Service Mode ▶ Display]

Display Function	Setting
d0	<Warm-up time> The warm-up time is shown on the Zoom Ratio Indicator
d1	<First copy time> The first copy time is shown on the Zoom Ratio Indicator
d2	<Multiple copy time> The multiple copy time is shown on the Zoom Ratio Indicator
d6	<Display test> All LEDs on the control panel are turned ON and OFF (blinking) for checking operations.
d7	<Sensor check> When a misfeed or malfunction occurs, this function is used to make a sensor check to isolate the possible faulty spot.) ***NOTE*** *For details, see TROUBLESHOOTING.*

6 ADJUST MODE

- The Adjust mode is used to adjust the optical system at the factory. Use this mode only when the RAM Board (PWB-Y) has been replaced and memory clear performed. Whenever PWB-Y has been replaced or memory clear performed, be sure to input the values indicated on the Adjust Mode Label on the inside of the Front Door.

6-1. Functions Available in the Adjust Mode

Function Code	Name
A0	Lens focal length correction
A1	Lens full size position correction
A2	Mirror full size position correction
A3	Feeding-direction zoom ratio correction
A4	Full size registration adjustment

Function Code	Name
A5	Reduction registration adjustment
A6	Book-B scan registration adjustment
A11	Enlargement registration adjustment
A12	Leading edge erase width adjustment
A13	Trailing edge erase width adjustment

6-2. Entering the Adjust Mode

<Procedure>

1. Show the Service Mode Menu on the Touch Panel and then press the following keys in this order.

   Press the Stop key. ➡ Press the Start key.

2. From the 10-Keys, press the number corresponding to the adjust mode function to be used.
   (The function code appears on the zoom ratio indicator.)
3. Press the Start key. Then, the adjustment data appears on the Multi-Copy Display.
4. Using the Clear key, clear the current adjustment data setting and enter the desired data from the 10-Keys.
5. Press the Start key to validate the new data.

NOTE
If the setting is illegal, it is not validated and is shown blinking.

<Test Copy>

- A test copy can be made by entering “A” of the Adjust Mode No., holding down the Stop key and pressing the Start key.

<Leaving the Adjust Mode>

- Press the Panel Reset key twice to go back to the Basic screen.

6-3. Settings in the Adjust Mode

[Service Mode ▶ Adjust Mode]

<table>
<tr><th colspan="2">Adjust Mode</th><th>Setting</th></tr>
<tr><td>A0</td><td>Lens focal length correction</td><td>Corrects variations in the Lens focal length (according to the grouping of the Lenses).
<table>
<tr><td>Data</td><td>49</td><td>50</td><td>51</td></tr>
<tr><td>Description</td><td>Short focal length (–)</td><td>Standard (0)</td><td>Long focal length (+)</td></tr>
</table></td></tr>
<tr><td>A1</td><td>Lens full size position correction</td><td>Corrects the zoom ratio in the crosswise direction by varying the Lens full size position.
<table>
<tr><td>Data</td><td>42</td><td>....</td><td>50</td><td>....</td><td>57</td></tr>
<tr><td>Description</td><td>+26 steps (Reduction direction)</td><td>....</td><td>+58 steps</td><td>....</td><td>+86 steps (Enlargement direction)</td></tr>
</table></td></tr>
<tr><td>A2</td><td>Mirror full size position correction</td><td>Corrects the optical path length of the Mirror for the Lens focal length.
<table>
<tr><td>Data</td><td>42</td><td>....</td><td>50</td><td>....</td><td>57</td></tr>
<tr><td>Description</td><td>+46 steps (Reduction direction)</td><td>....</td><td>+110 steps</td><td>....</td><td>+166 steps (Enlargement direction)</td></tr>
</table></td></tr>
<tr><td>A3</td><td>Feeding-direction zoom ratio correction</td><td>Correct the zoom ratio in the feeding direction by varying the scan speed.
<table>
<tr><td>Data</td><td>42</td><td>....</td><td>50</td><td>....</td><td>58</td></tr>
<tr><td>Description</td><td>–3.2% (Reduction direction)</td><td>....</td><td>±0%</td><td>....</td><td>+3.2% (Enlargement direction)</td></tr>
</table></td></tr>
<tr><td>A4</td><td>Full size registration adjustment</td><td>Corrects registration between the leading edge of the original and that of the image in the full size mode by varying the Synchronizing Roller start timing.
<table>
<tr><td>Data</td><td>30</td><td>....</td><td>50</td><td>....</td><td>70</td></tr>
<tr><td>Description</td><td>–5.6 mm (Smaller deviation)</td><td>....</td><td>±0 mm</td><td>....</td><td>+5.6 mm (Greater deviation)</td></tr>
</table></td></tr>
</table>

[Service Mode ▶ Adjust Mode]

<table>
<tr><th colspan="2">Adjust Mode</th><th>Setting</th></tr>
<tr><td>A5</td><td>Reduction registration adjustment</td><td>Corrects registration between the leading edge of the original and that of the image in a reduction mode by varying the Synchronizing Roller start timing.
<table>
<tr><td>Data</td><td>30</td><td>....</td><td>50</td><td>....</td><td>70</td></tr>
<tr><td>Description</td><td>–5.6 mm (Smaller deviation)</td><td>....</td><td>±0 mm</td><td>....</td><td>+5.6 mm (Greater deviation)</td></tr>
</table></td></tr>
<tr><td>A6</td><td>Book-B scan registration adjustment</td><td>Corrects the registration between the leading edge of the original and that of the image in Book-B scan by varying the Synchronizing Roller start timing.
<table>
<tr><td>Data</td><td>30</td><td>....</td><td>50</td><td>....</td><td>70</td></tr>
<tr><td>Description</td><td>–5.6 mm (Smaller deviation)</td><td>....</td><td>±0 mm</td><td>....</td><td>+5.6 mm (Greater deviation)</td></tr>
</table></td></tr>
<tr><td>A11</td><td>Enlargement registration adjustment</td><td>Corrects registration between the leading edge of the original and that of the image in an enlargement mode by varying the Synchronizing Roller start timing.
<table>
<tr><td>Data</td><td>30</td><td>....</td><td>50</td><td>....</td><td>70</td></tr>
<tr><td>Description</td><td>–5.6 mm (Smaller deviation)</td><td>....</td><td>±0 mm</td><td>....</td><td>+5.6 mm (Greater deviation)</td></tr>
</table></td></tr>
<tr><td>A12</td><td>Leading edge erase width adjustment</td><td>Corrects the leading edge erase width by varying the Image Erase Lamp ON timing.
<table>
<tr><td>Data</td><td>42</td><td>....</td><td>50</td><td>....</td><td>58</td></tr>
<tr><td>Description</td><td>–7.5 mm (Smaller width)</td><td>....</td><td>±0 mm</td><td>....</td><td>+7.5 mm (Greater width)</td></tr>
</table></td></tr>
<tr><td>A13</td><td>Trailing edge erase width adjustment</td><td>Corrects the trailing edge erase width by varying the Image Erase Lamp ON timing.
<table>
<tr><td>Data</td><td>40</td><td>....</td><td>50</td><td>....</td><td>60</td></tr>
<tr><td>Description</td><td>–7.5 mm (Smaller width)</td><td>....</td><td>±0 mm</td><td>....</td><td>+7.5 mm (Greater width)</td></tr>
</table></td></tr>
</table>

7 FUNCTION SETTING REQUIREMENTS AT REPLACEMENT OF PARTS

- If a part is replaced as part of troubleshooting and other service jobs, some parts require that a Test operation be run and data values reentered and/or cleared.

Function \ Replacement Part		RAM Board	IU	PC Drum	Developer *1	Cleaning Blade	Fusing Rollers	Exposure Lamp *2
Memory clear		❍						
Initialize		❍						
Job program		❍						
User mode		❍						
Service mode	Tech. Rep. Choice	❍						
	Test F3	❍						❍
	Test F5	❍		❍				
	Test F8	❍	❍		❍			
	PM Counter		❍					
	Clearing Parts/ Supplies Life Counter “Pc”			❍				
	Clearing Parts/ Supplies Life Counter “St”							
	Clearing Parts/ Supplies Life Counter “Cb”					❍		
	Clearing Parts/ Supplies Life Counter “Fu”						❍	
Adjust mode		❍						

❍ : Required

*1 : Including the replacement of the ATDC Sensor.

*2 : Including the cleaning of Lamp Regulator and optical system.

CONTENTS

✻Only when options are used

1. INTRODUCTION T-1
1-1. General Precautions T-1
1-2. How to Use This Book T-1
1-3. Reading the Text T-1
2. I/O PORT CHECK T-2
2-1. Controlled Parts Check Procedure T-2
2-2. Port Check List T-3
3. PAPER TRANSPORT FAILURE T-11
3-1. Paper Misfeed T-11
3-2. Misfeed Detected Types and Detection Timings T-13
3-3. Misfeed Clearing Procedures T-15
(1) Copier Take-Up Misfeed T-15
(2) PF-206 Take-Up Misfeed (23 cpm Copier) T-18
(3) PF-112 Take-Up Misfeed (23 cpm Copier) T-20
(4) Bypass Port Misfeed T-22
(5) Transport/Separator Misfeed T-24
(6) Fusing/Exit Misfeed T-26
(7) Duplex Unit Vertical Transport/Storage Misfeed (23 cpm Copier) ... T-28
(8) Duplex Unit Take-Up Misfeed (23 cpm Copier) T-31
4. MALFUNCTIONS T-33
4-1. Self-Diagnostic Function T-33
4-2. Troubleshooting Procedures T-39
(1) C0000: Main Drive Motor's failure to turn
C0001: Main Drive Motor turning at abnormal timing T-39
(2) C0010: PC Drive Motor's failure to turn
C0011: PC Drive Motor turning at abnormal timing T-40
(3) C004C: Cooling Fan Motor's failure to turn T-41
(4) C0070: Toner Replenishing Motor's failure to turn
C0071: Toner Replenishing Motor turning at abnormal timing T-42
(5) C0400: Exposure Lamp's failure to turn ON
C0410: Exposure Lamp turning ON at abnormal timing T-43
(6) C0500: Warm-up failure
C0510: Abnormally low fusing temperature
C0520: Abnormally high fusing temperature T-45
(7) C0600: Scanner Motor malfunction
C0610: Lens Motor malfunction
C0620: Mirror Motor malfunction T-47
(8) C0900: 3rd Drawer Paper Lift-Up Sensor malfunction
C0904: 3rd Drawer Paper Lift-Up Motor malfunction
C0950: 4th Drawer Paper Lift-Up Sensor malfunction
C0954: 4th Drawer Paper Lift-Up Motor malfunction T-49
(9) C0990: Main Tray Upward Motion Failure
C0991: Main Tray Downward Motion Failure
C0992: Main Tray Downward Motion Failure
C0993: Main Tray Upward Motion Failure

C0994: Main Tray Elevator M26's Failure to Turn T-51
(10) C0998: Shifter Transfer Failure
C0999: Shifter Return Failure
C099A: Shifter Return Failure
C099b: Shifter Transfer Failure
C099c: Shifter Motor M27's Failure to Turn T-53
(11) C099E: Shift Gate Position Detecting Failure
C099F: Shift Gate Position Detecting Failure
C0996: 3rd Drawer Lock Release Failure
C0F79: Paper Empty Sensor Failure T-55
(12) C0d00: Duplex Unit Front/Rear Edge Guide Plates home position .....
detection failure
C0d20: Duplex Unit Trailing Gate Unit home position detection failure
C0d50: Duplex Unit Drive Motor's failure to turn
C0d51: Duplex Unit Drive Motor turning at abnormal timing T-57
(13) C0F10: Faulty AE Sensor level
C0F30: ATDC Sensor malfunction T-59
(14) C0F02: Original size detection error (Defective CPU)
C0FE2 to C0FFE: Original Size Detecting Sensor failure T-60
(15) Power is not Turned ON T-61
(16) E1, E2 ..... T-63
5. IMAGE FAILURES T-64
5-1. Image Failure Troubleshooting T-64
5-2. Initial Checks T-64
5-3. Troubleshooting Procedures Classified by Image Failures T-65
(1) Blank copy T-66
(2) Black copy T-66
(3) Low Image Density T-67
(4) Foggy background T-68
(5) Black Streaks or Bands T-69
(6) Black Spots T-69
(7) Blank Streaks or Bands T-70
(8) Void Areas T-71
(9) Smear on Back T-71

1 INTRODUCTION

1-1. General Precautions

1. When servicing the copier with its covers removed, use utmost care to prevent your hands, clothing, and tools from being caught in revolving parts including the chains and gears.
2. Before attempting to replace parts and unplug connectors, make sure that the power cord of the copier has been unplugged from the wall outlet.
3. Never create a closed circuit across connector pins except those specified in the text and on the printed circuit.
4. When creating a closed circuit and measuring a voltage across connector pins specified in the text, be sure to use the green wire (GND).
5. When the user is using a word processor or personal computer from the wall outlet of the same line, take necessary steps to prevent the circuit breaker from opening due to overloads.
6. Keep all disassembled parts in good order and keep tools under control so that none will be lost or damaged.

1-2. How to Use This Book

1. If a component on a PWB or any other functional unit including a motor is defective, the text only instructs you to replace the whole PWB or functional unit and does not give troubleshooting procedure applicable within the defective unit.
2. All troubleshooting procedures contained herein assume that there are no breaks in the harnesses and cords and all connectors are plugged into the right positions.
3. For the removal procedures of covers and parts, see DIS/REASSEMBLY, ADJUSTMENT.
4. The troubleshooting procedures are given in the order of greater frequency of trouble or order of operation.
5. The procedures preclude possible malfunctions due to noise and other external causes.

1-3. Reading the Text

1. The paper transport failure troubleshooting procedures are given according to the symptom. First identify the location where the paper is present and start the procedure for that particular location. For malfunction troubleshooting, start with step 1 and onward.
2. Make checks in numerical order of steps and, if an item is checked okay, go to the next step.

Pattern 1

Step	Check Item	Result	Action
1	Is ...?	YES	Do this.
2	Go to step 2 if it checks okay.		

Pattern 2

Step	Check Item	Result	Action
1	Is ...?	YES	Do this.
		NO	Check that.
2		Go to step 2 if it checks okay.	

2 I/O PORT CHECK

2-1. Controlled Parts Check Procedure

To allow the Tech. Rep. to easily and safely determine whether a particular controlled part is fully operational, this copier provides the following provision: checking of the data of the I/O port on the board IC with the copier in the standby state (including a misfeed, malfunction, and closure failure condition) allows the Tech. Rep. to determine whether a signal is properly input to, and output from, a controlled part.

<Procedure>
1. When a paper misfeed or malfunction occurs, identify the I/O port of the possibly defective controlled part by reviewing the text or I/O port check list.
2. Select the I/O Check function of the Service mode and show on the Touch Panel the status of the I/O port identified in step 1.
3. Check the input or output port data to determine whether the controlled part is operational and signals are properly input and output.

<Controlled Part Check Procedure by Changing Input Port Data>

Example
When a paper misfeed occurs in the paper take-up section of the copier, 1st Drawer Paper Take-Up Sensor PC55 is considered to be responsible for it.

<Procedure>
1. Remove the sheet of paper misfed.
2. From the I/O port check list, it is found that the H/L input signal to PC55 is supplied from PWB-A (IC4A) APA1.
3. Select the I/O Check function from the Service mode menu and, using the Paper Select key, show the status of PWB-A (IC4A) APA1 on the control panel.
4. Check that the second LED from the right of the Exposure Level Display lights up (sensor being unblocked).

- Zoom Ratio Indicator
- Multi-Copy Display
- Exposure Level Display

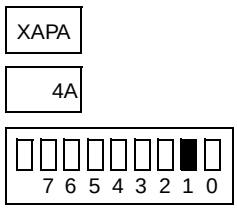

5. Move the PC55 actuator to block the sensor.
6. Check at this time that the LED goes out.
   ON: PC55 is faulty. OFF: PC55 is operational.

2-2. Port Check List

Copier

✻1st Drawer paper take-up LED on the Monitor Display lights up.

Symbol	Name	Port No.	Magnification Ratio Indicator	Multi-Copy Display	Manual Exposure Indicator	Operation Characteristics		CN/PJ No.
						ON	OFF	
M1	PC Drive Motor	P47	P4	1A	□■□□□□□□□□	OFF	ON	PJ11A-12A
M1	PC Drive Motor lock signal	P67	P6	↑	□■□□□□□□□□	When locked	When turned	PJ11A-11A
M2	Main Drive Motor	P43	P4	↑	□□□□□■□□□	OFF	ON	PJ11A-14A
M2	Main Drive Motor lock signal	P66	P6	↑	□□■□□□□□□□	When locked	When turned	PJ11A-13A
M3	Optical Section Cooling Fan Motor	P43	P4	↑	□□□□□■□□□	OFF	ON	PJ22A-2
M3	Optical Section Cooling Fan Motor lock signal	P65	P6	↑	□□□■□□□□□	When locked	When turned	PJ22A-3
M4	Suction Fan Motor	P43	P4	↑	□□□□□■□□□	OFF	ON	PJ5A-9A
M5	Scanner Motor	P61	P6	↑	□□□□□□□■□	OFF	ON	PJ16A-3B
		P62	↑	↑	□□□□□□■□□	ON	OFF	
M6	Lens Motor	P61	↑	↑	□□□□□□□■□	OFF	ON	PJ16A-1B
		P62	↑	↑	□□□□□□■□□	OFF	ON	
M7	Mirror Motor	P61	↑	↑	□□□□□□□■□	ON	OFF	PJ16A-2B
		P62	↑	↑	□□□□□□■□□	OFF	ON	
M8	Toner Replenishing Motor	BPA5	BPA	4A	□□□■□□□□□	OFF	ON	PJ5A-6A
M9	Cooling Fan Motor	OUTO	OUT	5A	□□□□□□□□■	OFF	ON	PJ20A-1
M9	Cooling Fan Motor lock signal	APC2	APC	4A	□□□□□□■□□	When locked	When turned	PJ20A-3
SL2	1st Drawer Paper Take-Up Solenoid	BPA4	BPA	4A	□□□□■□□□□	OFF	ON	PJ4A-9
SL3	2nd Drawer Paper Take-Up Solenoid	BPA3	↑	↑	□□□□□■□□□	OFF	ON	PJ3A-2

Symbol	Name	Port No.	Magnification Ratio Indicator	Multi-Copy Display	Manual Exposure Indicator	Operation Characteristics		CN/PJ No.
						ON	OFF	
SL51	Manual Feed Paper Take-Up Solenoid (down)	PB0	PB	5A	□□□□□□□□□■	OFF	ON	PJ5A-2B
SL51	Manual Feed Paper Take-Up Solenoid (up)	PB1	↑	↑	□□□□□□□□■□	OFF	ON	PJ5A-3B
SL61	Turnover/Exit Switching Solenoid	PB3	↑	↑	□□□□□■□□□	OFF	ON	PJ12A-5
CL1	Synchronizing Roller Clutch	BPA0	BPA	4A	□□□□□□□□■	OFF	ON	PJ5A-4A
CL2	Paper Transport Clutch	BPA1	↑	↑	□□□□□□□■□	OFF	ON	PJ5A-2A
CL51	Manual Feed Paper Take-Up Clutch	PB2	PB	5A	□□□□□□■□□	OFF	OFF	PJ5A-4B
PC10	Left Door Detecting Sensor	PA3	PA1	↑	□□□□□■□□□	When unblocked	When blocked	PJ12A-4
PC12	Duplex Vertical Transport Sensor	PA2	↑	↑	□□□□□□■□□	When unblocked	When blocked	PJ19A-2
PC30	2nd Paper Exit Sensor	APB7	APB	4A	□■□□□□□□□	When unblocked	When blocked	PJ12A-3
PC31	Manual Feed Paper Empty Sensor	APC3	APC	↑	□□□□□■□□□	When unblocked	When blocked	PJ5A-6B
PC51	Transport Roller Sensor	APC7	↑	↑	□■□□□□□□□	When unblocked	When blocked	PJ17A-5A
PC53	1st Paper Exit Sensor	APC5	↑	↑	□□□■□□□□□	When unblocked	When blocked	PJ17A-8A

Symbol	Name	Port No.	Magnification Ratio Indicator	Multi-Copy Display	Manual Exposure Indicator	Operation Characteristics		CN/PJ No.
						ON	OFF	
PC54	Paper Leading Edge Detecting Sensor	APC6	↑	↑	□□■□□□□□□	When unblocked	When blocked	PJ17A-2A
PC55	1st Drawer Paper Take-Up Sensor	APA1	APA	↑	□□□□□□□■□	When unblocked	When blocked	PJ4A-2
PC56	2nd Drawer Paper Take-Up Sensor	PA5	PA1	5A	□□□■□□□□□	When unblocked	When blocked	PJ3A-7
PC57	Right Door Detecting Sensor	APA0	APA	4A	□□□□□□□□■	When unblocked	When blocked	PJ17A-5B
PC69	2nd Drawer Set Sensor	PA7	PA1	5A	□■□□□□□□□	When unblocked	When blocked	PJ12A-2
PC81	Scanner Reference Position Sensor	APB0	APB	4A	□□□□□□□□■	When unblocked	When blocked	PJ17A-7B
PC86	Mirror Reference Position sensor	APB2	↑	↑	□□□□□□■□□	When unblocked	When blocked	PJ22A-5
PC90	Lens Reference Position Sensor	APB1	APB	4A	□□□□□□□■□	When unblocked	When blocked	PJ22A-8
PC101	1st Drawer Paper Empty Sensor	APA2	APA	↑	□□□□□□■□□	When unblocked	When blocked	PJ4A-6
PC102	2nd Drawer Paper Empty Sensor	PA6	PA1	5A	□□■□□□□□□	When unblocked	When blocked	PJ3A-4

Symbol	Name	Port No.	Magnification Ratio Indicator	Multi-Copy Display	Manual Exposure Indicator	Operation Characteristics		CN/PJ No.
						ON	OFF	
PC111	Original Cover Detecting Sensor	PA2	PA0	↑	□□□□□□■□□	When unblocked	When blocked	PJ18A-2
PC112	Toner Hopper Home Position Sensor	APB6	APB	4A	□□■□□□□□□	When unblocked	When blocked	PJ17A-2B
PC113	Original Size Detecting Sensor FD2	PA6	PA0	5A	□□■□□□□□□	When unblocked (blinking)	When blocked	———
PC114	Original Size Detecting Sensor CD1	PA5	↑	↑	□□□■□□□□□	When unblocked (blinking)	When blocked	———
PC115	Original Size Detecting Sensor FD3	PA7	↑	↑	□■□□□□□□□	When unblocked (blinking)	When blocked	———
PC116	Original Size Detecting Sensor CD2	PA4	PA0	5A	□□□□■□□□□	When unblocked (blinking)	When blocked	———

PF-206, PF-112 ✻3rd Drawer paper take-up LED on the Monitor Display lights up.

Symbol	Name	Port No.	Magnification Ratio Indicator	Multi-Copy Display	Manual Exposure Indicator	Operation Characteristics		CN/PJ No.
						ON	OFF	
M24	3rd Drawer Paper Lift-Up Motor	PA0	PA	1A	□□□□□□□□■	OFF	ON	PJ10A-3
M25	4th Drawer Paper Lift-Up Motor	PA2	↑	↑	□□□□□□■□□	OFF	ON	PJ10A-1
M26	Main Tray Elevator Motor (downward)	PA2	↑	↑	□□□□□□■□□	stop/upward	downward	PJ10A-2
M26	Main Tray Elevator Motor (upward)	PA3	↑	↑	□□□□□■□□□	stop/ downward	upward	PJ10A-1

Symbol	Name	Port No.	Magnification Ratio Indicator	Multi-Copy Display	Manual Exposure Indicator	Operation Characteristics		CN/PJ No.
						ON	OFF	
M27	Paper Shift Motor (return)	PA0	↑	↑	□□□□□□□□■	stop/transfer	return	PJ10A-3
M27	Paper Shift Motor (transfer)	PA1	↑	↑	□□□□□□□■□	stop/return	transfer	PJ10A-4
M28	Shift Gate Motor	PB2	PB	↑	□□□□□■□□	OFF	ON	PJ10A-6
SL41	3rd Drawer Lock Solenoid	PA1	PA	2A	□□□□□□□■□	OFF	ON	PJ6A-2
PC1	Shift Tray Paper Empty Sensor	PD1	PD	1A	□□□□□□□■□	When unblocked	When blocked	PJ9A-9
PC2	Main Tray Lower Position Sensor	PC1	PC	2A	□□□□□□□■□	When unblocked	When blocked	PJ3A-3
PC3	Shifter Home Position Sensor	PC0	↑	↑	□□□□□□□□■	When unblocked	When blocked	PJ3A-4
PC4	Shift Return Position Sensor	PD1	PD	↑	□□□□□□□■□	When unblocked	When blocked	PJ3A-5
PC5	Elevator Motor Pulse Sensor	PF2	PF	1A	□□□□□□■□□	When unblocked	When blocked	PJ9A-5
PC6	Shift Motor Pulse Sensor	PD0	PD	↑	□□□□□□□□■	When unblocked	When blocked	PJ9A-12
PC7	3rd Drawer Set Sensor	PG2	PG	↑	□□□□□□■□□	When unblocked	When blocked	PJ8A-9B
PC11	Lower Left Door Set Sensor	PB1	PB	2A	□□□□□□□■□	When unblocked	When blocked	PJ5A-2
PC13	Duplex Unit Turnover Path sensor	PB0	↑	↑	□□□□□□□□■	When unblocked	When blocked	PJ5A-5

Symbol	Name	Port No.	Magnification Ratio Indicator	Multi-Copy Display	Manual Exposure Indicator	Operation Characteristics		CN/PJ No.
						ON	OFF	
PC17	Vertical Transport Sensor 3	PC3	PC	1A	□□□□□■□□□	When unblocked	When blocked	PJ8A-9A
PC18	Lower Right Door Set Sensor	PE2	PE	↑	□□□□□□■□□	When unblocked	When blocked	PJ8A-5A
PC19	3rd Drawer Paper Lift-Up Sensor	PG3	PG	1A	□□□□□■□□□	When unblocked	When blocked	PJ8A-12B
PC20	3rd Drawer Paper Empty Sensor	PC0	PC	↑	□□□□□□□□■	When unblocked	When blocked	PJ8A-2B
PC21	3rd Drawer Paper Take-Up Sensor	PE3	PE	↑	□□□□□■□□□	When unblocked	When blocked	PJ8A-2A
PC22	Vertical Transport Sensor 4	PC2	PC	↑	□□□□□□■□□	When unblocked	When blocked	PJ8A-12A
PC23	4th Drawer Paper Lift-Up Sensor	PF3	PF	↑	□□□□□■□□□	When unblocked	When blocked	PJ9A-2
PC24	4th Drawer Paper Empty Sensor	PD0	PD	↑	□□□□□□□□■	When unblocked	When blocked	PJ9A-12
PC25	3rd Drawer Set Sensor	PG2	PG	↑	□□□□□□■□□	When unblocked	When blocked	PJ8A-9B
PC26	4th Drawer Set Sensor	PF2	PF	↑	□□□□□□■□□	When unblocked	When blocked	PJ9A-5

Symbol	Name	Port No.	Magnification Ratio Indicator	Multi-Copy Display	Manual Exposure Indicator	Operation Characteristics		CN/PJ No.
						ON	OFF	
PC27	3rd Drawer Paper Lift-Up Motor Pulse Sensor	PC1	PC	↑	□□□□□□□■□	When unblocked	When blocked	PJ8A-5B
PC28	4th Drawer Paper Lift-Up Motor Pulse Sensor	PD1	PD	↑	□□□□□□□■□	When unblocked	When blocked	PJ9A-9
PC29	4th Drawer Paper Take-Up Sensor	PB3	PB	2A	□□□□□■□□□	When unblocked	When blocked	PJ4A-2
PC34	Shift Gate Position Sensor	PC1	PC	1A	□□□□□□□■□	When unblocked	When blocked	PJ3A-7
PC35	Lower Position Sensor	PB3	PB	2A	□□□□□■□□□	When unblocked	When blocked	PJ3A-6
UN21	Paper Descent Key	PC2	↑	2A	□□□□□□■□□	OFF	ON	PJ3A-2
PWB-E	Main Tray Paper Empty Board	PF3	PF	1A	□□□□□■□□□	When unblocked	When blocked	PJ9A-2

AD-11/PF-6D

✻The Duplex Unit LED on the Monitor Display lights up.

Symbol	Name	Port No.	Magnification Ratio Indicator	Multi-Copy Display	Manual Exposure Indicator	Operation Characteristics		CN/PJ No.
						ON	OFF	
M31	Duplex Unit Drive Motor	PB3	PB	1A	□□□□□■□□□	OFF	ON	PJ6G-2
M31	Duplex Unit Drive Motor lock signal	PE1	PE	↑	□□□□□□□■□	When locked	When turned	PJ6G-1
CL31	Duplex Unit Paper Take-Up Clutch	PA3	PA	↑	□□□□□■□□□	OFF	ON	PJ2G-7
SL31	Duplex Unit Gate Switching Solenoid	PH1	PH	↑	□□□□□□□■□	OFF	ON	PJ3G-5
SL32	Duplex Unit Rear Finger Solenoid	PH0	↑	↑	□□□□□□□□■	OFF	ON	PJ3G-7
PC8	Duplex Gate Home Position Sensor	PE0	PE	↑	□□□□□□□□■	When unblocked	When blocked	PJ7G-2
PC9	Front/Rear Edge Guide Plate Home Position Sensor	PC3	PC	↑	□□□□□■□□□	When unblocked	When blocked	PJ7G-5
PC14	Duplex Unit Trailing Sensor	PC1	↑	↑	□□□□□□□■□	When unblocked	When blocked	PJ3G-2
PC15	Duplex Unit Paper Empty Sensor	PC2	↑	↑	□□□□□□■□□	When unblocked	When blocked	PJ2G-4
PC16	Duplex Unit Paper Take-Up Sensor	PC0	↑	↑	□□□□□□□□■	When unblocked	When blocked	PJ2G-9

3 PAPER TRANSPORT FAILURE

3-1. Paper Misfeed

When a paper misfeed occurs in the copier, the corresponding Misfeed Location Monitor LED on the control panel blinks to let the user know where the misfeed has occurred. If an LED lights up steadily, it indicates that there might be a sheet of paper present at that particular location in the copier. If a paper misfeed occurs very frequently, carry out the necessary troubleshooting procedures according to the location of the misfeed.

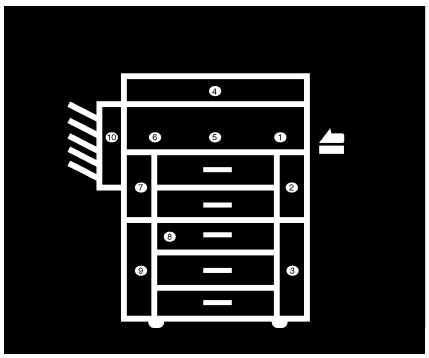

1139T025AA

Blinking Light	There is a misfeed at that location.
Steady Light	There might be a sheet of paper stopped at that location.

Blinking LED	Misfeed Location	Ref. Page	
②	Copier take-up and vertical transport	T-15~T-17	
③	Paper Feed Cabinet take-up and vertical transport	T-18~T-21	✻
①	Bypass port	T-22, T-23	
⑤	Transport/Separator	T-24, T-25	
⑥	Fusing/Exit	T-26, T-27	✻
⑦ ⑨	Duplex Unit vertical transport	T-28~T-30	✻
⑧	Duplex Unit storage	T-28~T-30	✻
③	Duplex Unit take-up	T-31, T-32	✻
⑩	Sorter/Staple Sorter	—	✻
④	Automatic/Duplexing Document Feeder	—	

✻ When option is installed

The paper misfeed, including a sheet of paper that is likely to be present, in the copier as well as in the paper feeder options is detected by the following sensors.

✻ When options are installed

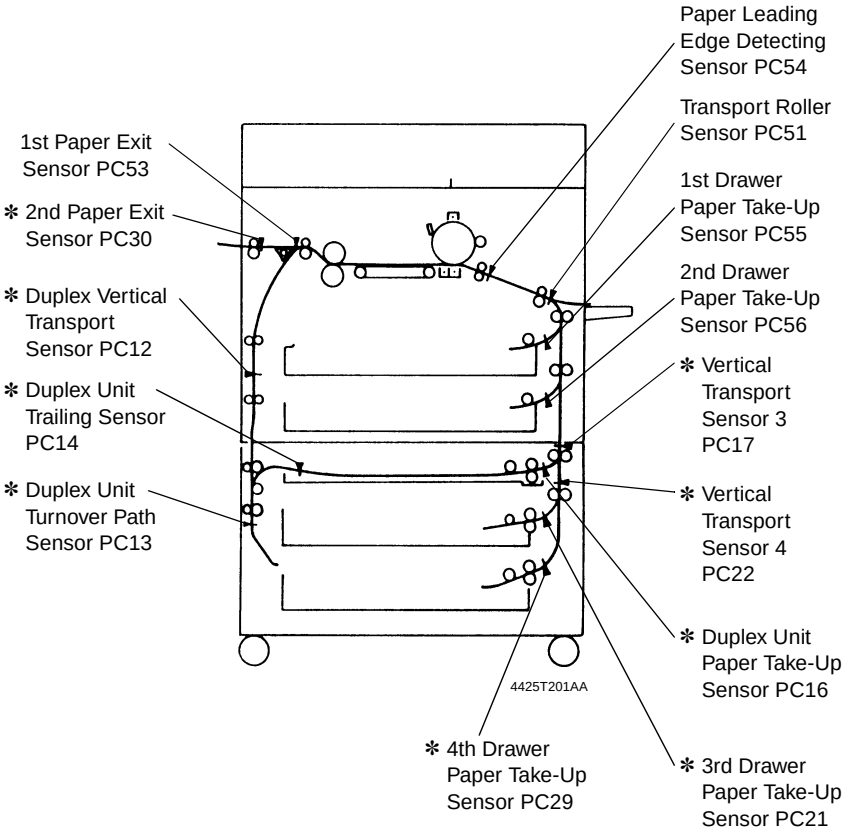

3-2. Misfeed Detected Types and Detection Timings

- The following table lists the types of misfeed detection classified by the misfeed locations and their corresponding detection timings.

Note
For the misfeed detection types and detection timings in the options, see the Service Manual for the options.

<Paper Take-up Misfeed>

Type	Detection Timing
Paper take-up failure detection	1st Drawer Paper Take-Up Sensor PC55 is not blocked (L) after the lapse of approx. 2.4 seconds after 1st Drawer Paper Take-Up Solenoid SL2 has been energized during the third paper take-up retry sequence.
	2nd Drawer Paper Take-Up Sensor PC56 is not blocked (L) after the lapse of approx. 2.4 seconds after 2nd Drawer Paper Take-Up Solenoid SL3 has been energized during the third paper take-up retry sequence.
Paper take-up trailing edge detection	PC55 is not unblocked (H) after the lapse of T seconds (which varies for paper sizes) after it has been blocked (L).
	PC56 is not unblocked (H) after the lapse of T seconds (which varies for paper sizes) after it has been blocked (L).
Leading edge detection by Transport Roller Sensor PC51	PC51 is not blocked (L) after the lapse of approx. 1.7 seconds after PC55 has been blocked (L).
	PC51 is not blocked (L) after the lapse of approx. 2.5 seconds after PC56 has been blocked (L).

<Multi-Bypass Misfeed>

Type	Detection Timing
Paper take-up failure detection	PC51 is not blocked (L) after the lapse of approx. 2.7 seconds after Manual Feed Paper Take-Up Clutch CL51 has been energized during the third paper take-up retry sequence.
Leading edge detection by Paper Leading Edge Detecting Sensor PC54	PC54 is not blocked (L) after the lapse of approx. 2.5 seconds after Paper Transport Clutch CL2 has been energized.

<Transport/Separator Misfeed>

Type	Detection Timing
Trailing edge detection by Transport Roller Sensor PC51	PC51 is not unblocked (H) after the lapse of T seconds (which varies for paper sizes) after the TRON signal has been input.
Leading edge detection by Paper Leading Edge Detecting Sensor PC54	PC54 is not blocked (L) after the lapse of approx. 1.5 seconds after PC51 has been blocked (L).
Trailing edge detection by PC54	PC54 is not unblocked (H) after the lapse of approx. 1.6 seconds after PC51 has been unblocked (H).

<Fusing/Exit Misfeed>

Type	Detection Timing
Leading edge detection by 1st Paper Exit Sensor PC53	PC53 is not unblocked (H) after the lapse of approx. 4.5 seconds after the TRON signal has been input.
Trailing edge detection by PC53	PC53 is not blocked (L) after the lapse of approx. 3.7 seconds after PC54 has been unblocked (H).
Leading edge detection by 2nd Paper Exit Sensor PC30	PC30 is not blocked (L) after the lapse of approx. 2 seconds after PC53 has been unblocked (H).
Trailing edge detection by PC30	PC30 is not unblocked (H) after the lapse of approx. 2 seconds after PC53 has been blocked (L).

3-3. Misfeed Clearing Procedures

(1) Copier Take-Up Misfeed

Symbol	Name
PC51	Transport Roller Sensor
PC55	1st Drawer Paper Take-Up Sensor
PC56	2nd Drawer Paper Take-Up Sensor (23 cpm Copier)
SL2	1st Drawer Paper Take-Up Solenoid
SL3	2nd Drawer Paper Take-Up Solenoid (23 cpm Copier)
CL2	Paper Transport Clutch
PWB-A	Master Board

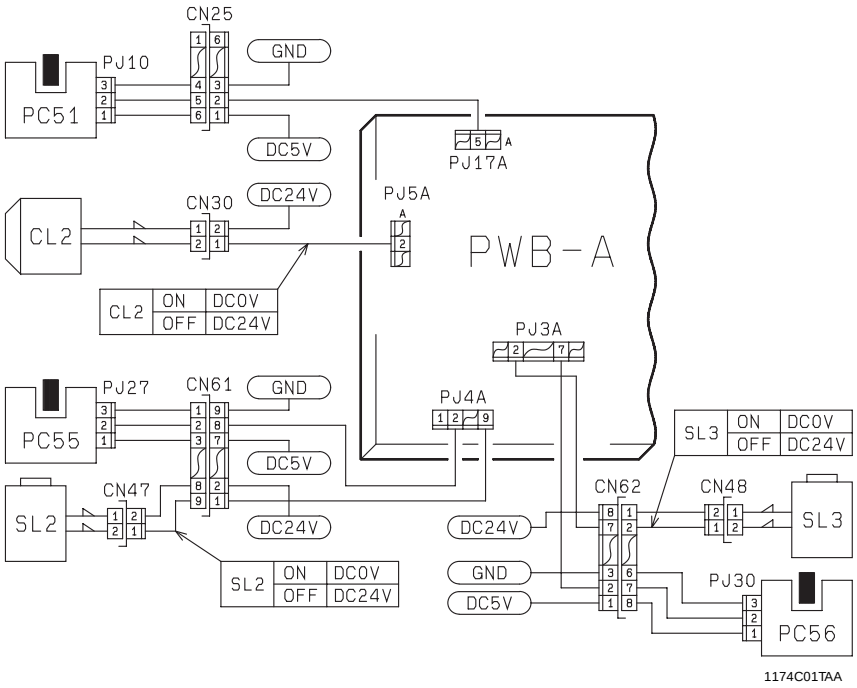

Copier Take-Up Misfeed Clearing Procedure

Symptom	Step	Check Item	Result	Action
• Paper is not taken up at all. • Paper is stationary before the Paper Take-Up Sensor.	1	Does the paper being used meet product specifications?	NO	Instruct the user to use the paper that meets product specifications.
	2	Is the paper curled, waved, or damp?	YES	Change the paper. Instruct the user in how to store the paper.
	3	Are the Separator Fingers on both sides of the Drawer in position?	NO	Instruct the user to load the paper so that it rests under the Fingers.
	4	Are the Separator Fingers deformed?	YES	Replace the Fingers.
	5	Is the Trailing Edge Stop or Edge Guide in good position?	NO	Instruct the user in how to position the Edge Stop or Guide.
	6	Are the Paper Lifting Springs positioned correctly?	NO	Change the position of the Springs or add one as necessary.
	7	Are the Paper Take-Up Rolls deformed, worn, or dirty with paper dust?	YES	Clean or replace the Paper Take-Up Rolls.
	8	Is a signal being output from PWB-A to the Paper Take-Up Solenoid? ✻ Does the voltage across PJ4A-9 (1st Drawer) or PJ3A-2 (2nd Drawer) on PWB-A and GND change from DC24V to DC0V when the Start Key is pressed?	YES	Adjust the Solenoid stroke. Check the Solenoid.
			NO	Replace PWB-A.
	9	Is the Clutch Spring deformed or worn?	YES	Replace the Clutch Spring.

Continued on next page

Symptom	Step	Check Item	Result	Action
• Paper is stationary before the Vertical Transport Roller. • Paper is stationary at the Vertical Transport Roller.	10	Check 1st/2nd Drawer Paper Take-Up Sensor (PC55/PC56). See p.T-2. PC55: PWB-A (IC4A) APA1 PC56: PWB-A (IC5A) PA5	YES	Replace PWB-A.
			NO	Check the Actuator for operation. Check the Paper Take-Up Sensor.
	11	Are the Vertical Transport Rollers deformed, worn, or dirty with paper dust?	YES	Clean or replace the Vertical Transport Rollers.
	12	Are the Paper Take-Up Guide Plate and Vertical Transport Guide Plate dirty or deformed?	YES	Clean, correct, or replace the Guide Plate.
	13	Is a signal being output from PWB-A to the Clutch? ✻ Does the voltage across PJ5A-2A on PWB-A and GND change from DC24V to DC0V when the Start Key is pressed?	YES	Check the Clutch.
			NO	Replace PWB-A.
• Paper is stationary near the Transport Roller.	14	Check Transport Roller Sensor PC51. See p. T-2 (PWB-A (IC4A) APC7).	YES	Replace or check the PWB-A.
			NO	Check the Actuator for operation. Check PC51.
	15	Are the Transport Rollers deformed, worn, or dirty with paper dust?	YES	Clean or replace the Transport Rollers.

(2) PF-206 Take-Up Misfeed (23 cpm Copier)

Symbol	Name
PC21	3rd Drawer Paper Take-Up Sensor
PC22	Vertical Transport Sensor 4
PC29	4th Drawer Paper Take-Up Sensor
M21	Vertical Transport Motor
M22	3rd Drawer Paper Take-Up Motor
M23	4th Drawer Paper Take-Up Motor
PWB-A	23 cpm Copier Master Board
PWB-A	PF-206 Master Board

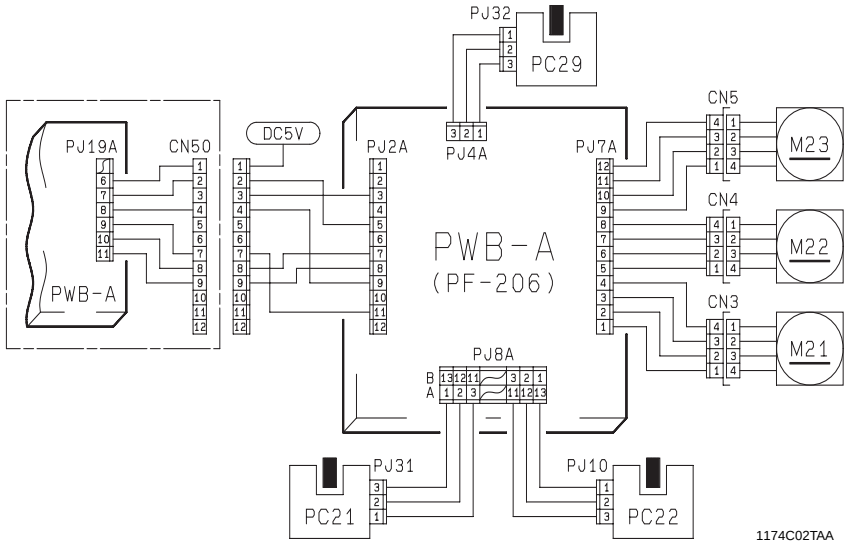

Paper Feed Cabinet Take-Up Misfeed Clearing Procedure

Symptom	Step	Check Item	Result	Action
• Paper is not taken up at all. • Paper is stationary before the Paper Take-Up Sensor.	1	Does the paper being used meet product specifications?	NO	Instruct the user to use the paper that meets product specifications.
	2	Is the paper curled, waved, or damp?	YES	Change the paper. Instruct the user in how to store the paper.
	3	Is the Paper Take-Up Motor turning when the Start Key is pressed?	NO	Check for possible overload. Replace PWB-A or PF-206 PWB-A. Check the Motor.
	4	Is the Paper Take-Up Roll or Separator Roll deformed, worn, or dirty with paper dust?	YES	Clean or replace the Paper Take-Up or Separator Roll.
• Paper is stationary before the Vertical Transport Rollers.	5	Check 3rd/4th Drawer Paper Take-Up Sensor (PC21/PC29). See p. T-2. PC21: (PF-206) PWB-A IC1A PE3. PC29: (PF-206) PWB-A IC2A PB3.	YES	Replace PWB-A or PF-206 PWB-A.
			NO	Check the Actuator for operation. Check the Paper Take-Up Sensor.
	6	Is Vertical Transport Motor M21 turning when the Start Key is pressed?	NO	Check for possible overload. Replace PWB-A or PF-206 PWB-A. Check the Motor.
	7	Is the Vertical Transport Roller or Guide Plate deformed, worn, or dirty with paper dust?	YES	Clean or replace the Vertical Transport Roller or Guide Plate.
• Paper is stationary near Vertical Transport Sensor 4 PC22.	8	Check Vertical Transport Sensor 4 PC22. See p. T-2 (PF-206) PWB-A IC1A PC2.	YES	Replace PWB-A or PF-206 PWB-A.
			NO	Check the Actuator for operation and check the Sensor.
• Paper is stationary before the copier.	9	Check Vertical Transport Sensor 4 PC22. See p. T-2 (PF-206) PWB-A IC1A PC2.	YES	Replace PWB-A or PF-206 PWB-A.
			NO	Check the Actuator for operation and check the Sensor.
	10	Is the Vertical Transport Roller or Guide Plate deformed, worn, or dirty with paper dust?	YES	Clean or replace the Vertical Transport Roller or Guide Plate.
			NO	Check the Paper Feed Cabinet for positive connection to the copier.

(3) PF-112 Take-Up Misfeed (23 cpm Copier)

Symbol	Name
PC21	3rd Drawer Paper Take-Up Sensor
PC22	Vertical Transport Sensor 4
M21	Vertical Transport Motor
M22	3rd Drawer Paper Take-Up Motor
PWB-A	23 cpm Copier Master Board
PWB-A	PF-112 Master Board

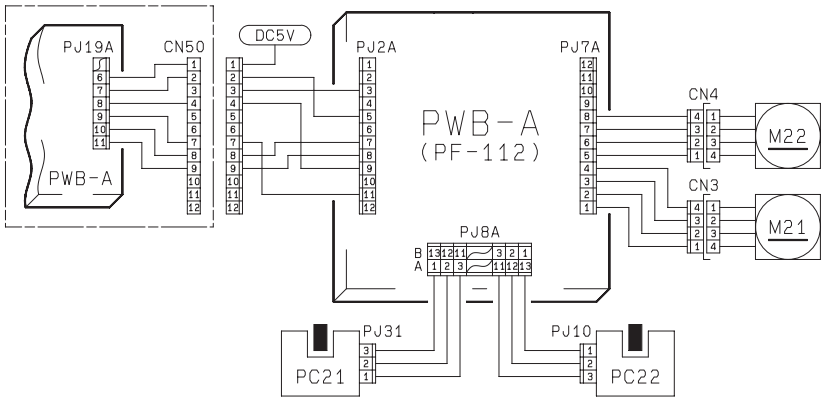

1174C03TAA

Paper Feed Cabinet Take-Up Misfeed Clearing Procedure

Symptom	Step	Check Item	Result	Action
• Paper is not taken up at all. • Paper is stationary before the Paper Take-Up Sensor.	1	Does the paper being used meet product specifications?	NO	Instruct the user to use the paper that meets product specifications.
	2	Is the paper curled, waved, or damp?	YES	Change the paper. Instruct the user in how to store the paper.
	3	Is the Paper Take-Up Motor turning when the Start Key is pressed?	NO	Check for possible overload. Replace PWB-A or PF-112 PWB-A. Check the Motor.
	4	Is the Paper Take-Up Roll or Separator Roll deformed, worn, or dirty with paper dust?	YES	Clean or replace the Paper Take-Up or Separator Roll.
• Paper is stationary before the Vertical Transport Rollers.	5	Check 3rd Drawer Paper Take-Up Sensor PC21. See p. T-2. PC21: (PF-112) PWB-A IC1A PE3.	YES	Replace PWB-A or PF-112 PWB-A.
			NO	Check the Actuator for operation. Check the Paper Take-Up Sensor.
	6	Is Vertical Transport Motor M21 turning when the Start Key is pressed?	NO	Check for possible overload. Replace PWB-A or PF-112 PWB-A. Check the Motor.
	7	Is the Vertical Transport Roller or Guide Plate deformed, worn, or dirty with paper dust?	YES	Clean or replace the Vertical Transport Roller or Guide Plate.
• Paper is stationary near Vertical Transport Sensor 4 PC22.	8	Check Vertical Transport Sensor 4 PC22. See p. T-2 (PF-112) PWB-A IC1A PC2.	YES	Replace PWB-A or PF-112 PWB-A.
			NO	Check the Actuator for operation and check the Sensor.
• Paper is stationary before the copier.	9	Check Vertical Transport Sensor 4 PC22. See p. T-2 (PF-112) PWB-A IC1A PC2.	YES	Replace PWB-A or PF-112 PWB-A.
			NO	Check the Actuator for operation and check the Sensor.
	10	Is the Vertical Transport Roller or Guide Plate deformed, worn, or dirty with paper dust?	YES	Clean or replace the Vertical Transport Roller or Guide Plate.
			NO	Check the Paper Feed Cabinet for positive connection to the copier.

(4) Bypass Port Misfeed

Symbol	Name
PC31	Manual Feed Paper Empty Sensor
PC54	Paper Leading Edge Detecting Sensor
SL51	Manual Feed Paper Take-Up Solenoid
CL2	Paper Transport Clutch
CL51	Manual Feed Paper Take-Up Clutch
PWB-A	Master Board

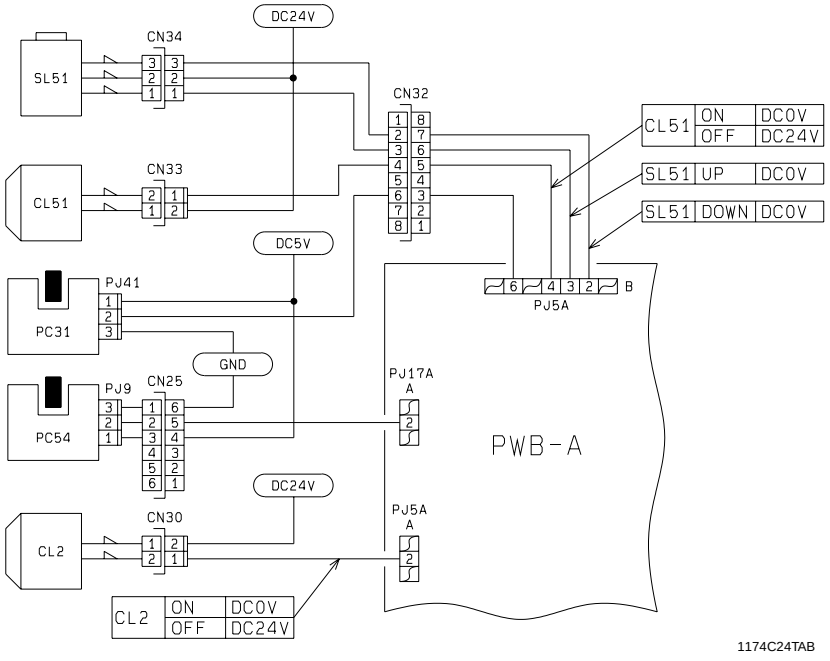

Bypass Port Misfeed Clearing Procedure

Symptom	Step	Check Item	Result	Action
• Paper is not detected.	1	Check Manual Feed Paper Empty Sensor PC31. See p. T-2 (PWB-A (IC4A) APC 3).	YES	Replace PWB-A.
			NO	Check the operation of the actuator of PC31. If it operates properly, replace PC31.
• Paper is not taken up at all.	2	Does the paper being used meet product specifications?	NO	Instruct the user to use the paper that meets product specifications.
	3	Is the paper curled, waved, or damp?	YES	Change the paper. Instruct the user in how to store the paper.
	4	Are the Paper Take-Up Rolls pressed against the paper stack when the Start Key is pressed? ✻ Does the voltage across PJ5A-2B on PWB-A and GND change from DC24V to DC0V when the Start Key is pressed?	YES	Adjust the stroke of the Solenoid. Check the Solenoid.
			NO	Replace PWB-A.
	5	Does the voltage across PJ5A-4B on PWB-A and GND change from DC24V to DC0V when the Start Key is pressed?	YES	Check the Clutch.
			NO	Replace PWB-A.
	6	Is the Pressure Pad or Guide Plate deformed or dirty?	YES	Clean or replace the Pressure Pad or Guide Plate.
	7	Are the Paper Take-Up Rolls deformed, worn, or dirty with paper dust?	YES	Clean or replace the Paper Take-Up Rolls.
• Paper is stationary near the Transport Roller.	8	Check Paper Leading Edge Detecting Sensor PC54. See p. T-2 (PWB-A (IC4A) APC6).	NO	Check the Actuator for operation. Check PC54.
	9	Does the voltage across PJ5A-2A on PWB-A and GND change from DC24V to DC0V when the Start Key is pressed?	YES	Check the Clutch.
			NO	Replace PWB-A.
	10	Is the Transport Roller or Guide Plate of the copier deformed, worn, or dirty with paper dust?	YES	Clean or replace the Vertical Transport Roller or Guide Plate.

(5) Transport/Separator Misfeed

Symbol	Name
PC51	Transport Roller Sensor
PC54	Paper Leading Edge Detecting Sensor
CL1	Synchronizing Roller Clutch
M4	Suction Fan Motor
PWB-A	Master Board

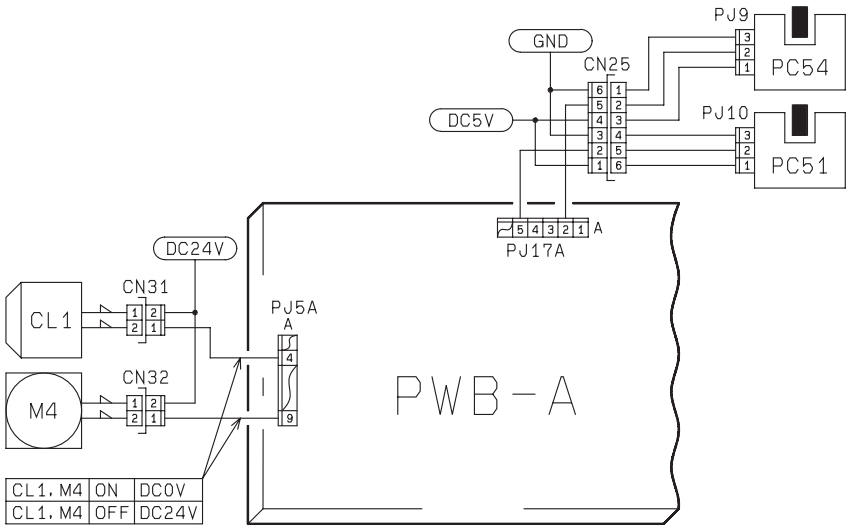

1174C05TAA

Transport/Separator Misfeed Clearing Procedure

Symptom	Step	Check Item	Result	Action
• Paper is stationary before the Synchronizing Roller.	1	Is the paper curled, waved, or damp?	YES	Change the paper. Instruct the user in how to store the paper.
	2	Check Paper Leading Edge Detecting Sensor PC54 See p. T-2 (PWB-A (IC4A) APC6).	YES	Replace PWB-A.
			NO	Check the Actuator for operation. Check PC54.
	3	Check Synchronizing Roller Clutch CL1. ✻ Does the voltage across PJ5A-4A on PWB-A and GND change from DC24V to DC0V after the Start Key has been pressed?	YES	Check the Clutch.
			NO	Replace PWB-A.
	4	Is a given length of loop formed before the Synchronizing Roller?	NO	Adjust the loop length or clean or replace the Transport Rollers.
• Paper is stationary near the PC Drum.	5	Is the Pre-Image Transfer Guide Plate deformed or dirty?	YES	Correct or clean the Guide Plate.
	6	Is the Corona Unit Cleaning Lever (Lower) in correct position?	NO	Place the Lever in position.
	7	Are the Image Transfer/ Paper Separator Corona Wires deteriorated or dirty?	YES	Clean or replace the Wires.
	8	Are the Paper Guides deformed or dirty?	YES	Clean or replace the Paper Guides.
	9	Are the Synchronizing Rollers deformed, worn, or dirty with paper dust?	YES	Clean or replace the Synchronizing Rollers.
• Paper is wedged at the Paper Separator Fingers.	10	Are the Paper Separator Fingers deformed or dirty?	YES	Correct or clean, or replace, the Paper Separator Fingers.
• Paper is stationary before the Suction Belts.	11	Check Transport Roller Sensor PC51. See p. T-2 (PWB-A (IC4A) APC7).	NO	Check the Actuator for operation. Check PC51.
	12	Check Paper Leading Edge Detecting Sensor PC54. See p. T-2 (PWB-A (IC4A) APC6).	YES	Replace PWB-A.
			NO	Check the Actuator for operation. Check PC54.
	13	Do the Suction Belts turn properly?	NO	Check the Belts and Drive Gear.
	14	Check Suction Fan Motor M4. ✻ Does the voltage across PJ5A-9A on PWB-A and GND change from DC24V to DC0V when the Start Key is pressed?	YES	Check the DC24V line. Check M4.
			NO	Replace PWB-A.

(6) Fusing/Exit Misfeed

Symbol	Name
PC53	1st Paper Exit Sensor
PC30	2nd Paper Exit Sensor
PC54	Paper Leading Edge Detecting Sensor
M4	Suction Fan Motor
PWB-A	Master Board

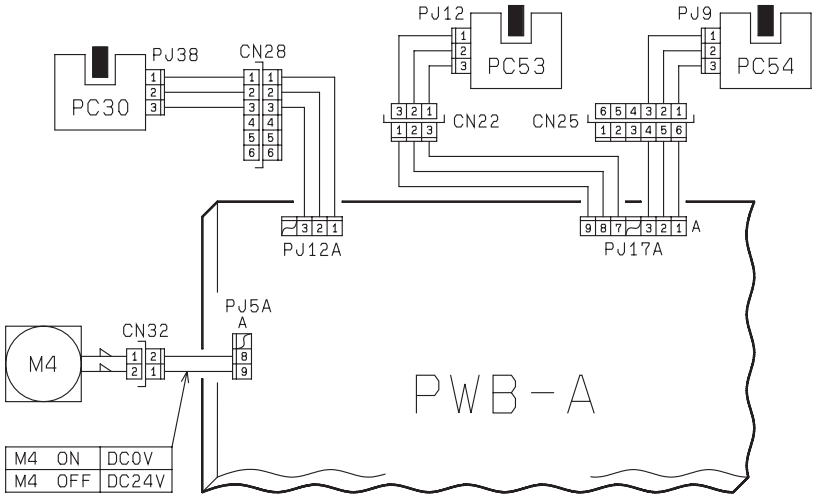

1174C06TAA

Fusing/Exit Misfeed Clearing Procedure

Symptom	Step	Check Item	Result	Action
• Paper is stationary before the Fusing Roller.	1	Is the paper curled, waved, or damp?	YES	Change the paper. Instruct the user in how to store the paper.
	2	Is the Guide Plate dirty with toner?	YES	Clean the Guide Plate. Check for possible scattering of toner.
	3	Do the Suction Belts turn properly?	NO	Check the Belts and Drive Gear.
	4	Check Suction Fan Motor M4. ✻ Does the voltage across PJ5A-9A on PWB-A and GND change from DC24V to DC0V when the Start Key is pressed?	YES	Check the DC24V line. Check M4.
			NO	Replace PWB-A.
• The leading edge of the paper is stationary near the Fusing Roller.	5	Are the Fusing Rollers scratched or dirty? Or, has the replacement time arrived for the Rollers?	YES	Clean or replace the Rollers.
	6	Are the Paper Separator Fingers dirty with toner or worn? Are their edges damaged?	YES	Clean or replace the Fingers.
	7	Is the Oil Roller dirty? Or, has the replacement time arrived for the Roller?	YES	Clean or replace the Roller.
• Paper is stationary after the Paper Exit Roller/Rolls.	8	Check 1st/2nd Paper Exit Sensor (PC53/PC30). See p. T-2. PC53: PWB-A (IC4A) APC5 PC30: PWB-A (IC4A) APB7	NO	Check the Actuator for operation. Check PC53 or PC30, or both.
	9	Check Paper Leading Edge Detecting Sensor PC54. See p. T-2 (PWB-A (IC4A) APC6).	YES	Replace PWB-A.
			NO	Check the Actuator for operation. Check PC54.

(7) Duplex Unit Vertical Transport/Storage Misfeed (23 cpm Copier)

Symbol	Name
PC12	Duplex Vertical Transport Sensor
PC13	Duplex Unit Turnover Path Sensor
PC14	Duplex Unit Trailing Sensor
PC15	Duplex Unit Paper Empty Sensor
PC53	1st Paper Exit Sensor
SL31	Duplex Unit Gate Switching Solenoid
SL61	Turnover/Exit Switching Solenoid
M31	Duplex Unit Drive Motor
PWB-A	23 cpm Copier Master Board
PWB-A	Master Board of PF-206/PF112/PF-6D
PWB-G	Duplex Unit Master Board

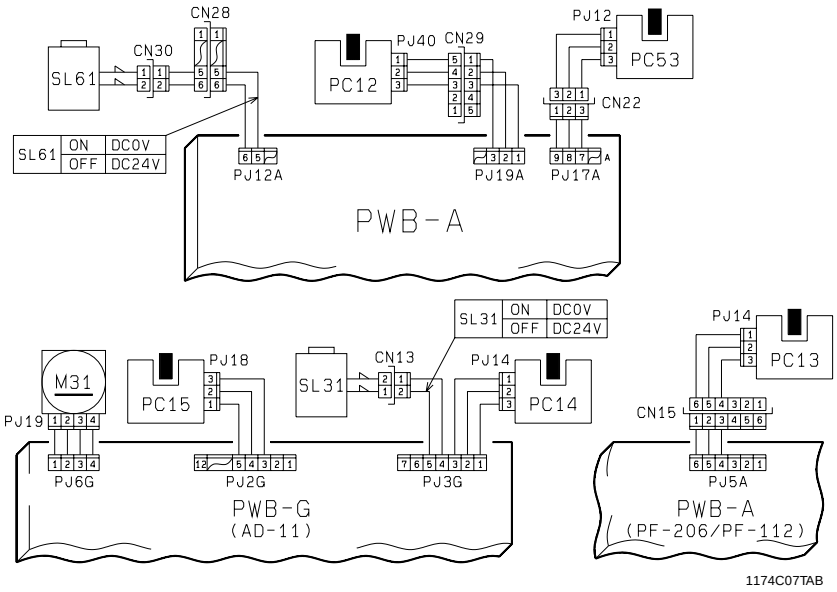

Duplex Unit Vertical Transport Misfeed Clearing Procedure

Symptom	Step	Check Item	Result	Action
• Paper is stationary near the Exit Section.	1	Is the paper curled, waved, or damp?	YES	Change the paper. Instruct the user in how to store the paper.
	2	Does the voltage across PJ12A-5 on PWB-A and GND change from DC24V to DC0V after the Start Key has been pressed?	YES	Adjust the stroke of the Solenoid or check the Solenoid.
			NO	Replace PWB-A.
	3	Are the Turnover/Exit Switching Plate and Upper and Lower Guide Plates deformed or dirty?	YES	Clean or replace the Plates.
• Paper is stationary near the Vertical Transport Section of the Duplex Unit.	4	Is drive being transmitted to the Vertical Transport Roller of the Duplex Unit? (Is Duplex Unit Drive Motor M31 turning after the Start Key has been pressed?)	NO	Check for possible overload. Check the Duplex Unit drive coupling or replace PWB-A of PF-206/PF-112/PF-6D, PWB-G, and/or M31.
	5	Check Duplex Vertical Transport Sensor PC12. See p. T-2 (PWB-A (IC5A) PA2).	NO	Check the Actuator for operation. Check PC12.
	6	Check 1st Paper Exit Sensor PC53. See p. T-2 (PWB-A (IC4A) APC5).	YES	Replace PWB-A.
			NO	Check the Actuator for operation. Check PC53.
• Paper is stationary near the Turnover Section.	7	Are the Paddle Roller, Slip Roller/Rolls, and Rolls B Release Lever deformed, worn, or dirty with paper dust?	YES	Clean or replace the Roller and/or Roll. Check the Release Lever mechanism.
			NO	Check the drive coupling from the Duplex Unit.
	8	Check Duplex Unit Turnover Path Sensor PC13. See p. T-2 (PF-206/PF-112/PF-6D) PWB-A IC2A PB0.	YES	Replace PWB-A of PF-206/PF-112/PF-6D.
			NO	Check the Actuator for operation and PC13.

Continued on next page

Symptom	Step	Check Item	Result	Action
• The leading edge of the paper is stationary inside the Duplex Unit.	9	Is the Paper Guide Mylar deformed or dirty?	YES	Clean or replace the Mylar.
			NO	Check the Mylar moving mechanism.
	10	Does the Gate Switching Plate operate properly? (Is Duplex Unit Gate Switching Solenoid SL31 energized for a paper length of 300 mm or longer?) ✻ Does the voltage across PJ3G-5 on PWB-G and GND change from DC24V to DC0V after the Start Key has been pressed?	YES	Adjust the stroke of the Solenoid or check the Solenoid.
			NO	Replace PWB-G or PWB-A of PF-206/PF-112/PF-6D.
	11	Check Duplex Unit Trailing Sensor PC14. See p. T-2. (AD-11) PWB-G IC1G PC1.	YES	Check the Actuator for operation and PC14.
			NO	Replace PWB-G or PWB-A of PF-206/PF-112/PF-6D.
• Paper is stationary near the take-up port of the Duplex Unit.	12	Check Duplex Unit Paper Empty Sensor PC15. See p. T-2. (AD-11) PWB-G IC1G PC2.	YES	Check the Actuator for operation and PC15.
			NO	Replace PWB-G or PWB-A of PF-206/PF-112/PF-6D.

(8) Duplex Unit Take-Up Misfeed (23 cpm Copier)

Symbol	Name
PC16	Duplex Unit Paper Take-Up Sensor
PC17	Vertical Transport Sensor 3
SL33	Duplex Unit Pick-Up Solenoid
CL31	Duplex Unit Paper Take-Up Clutch
M21	Vertical Transport Motor
PWB-A	Master Board of PF-206/PF-112/PF-6D
PWB-G	Duplex Unit Master Board

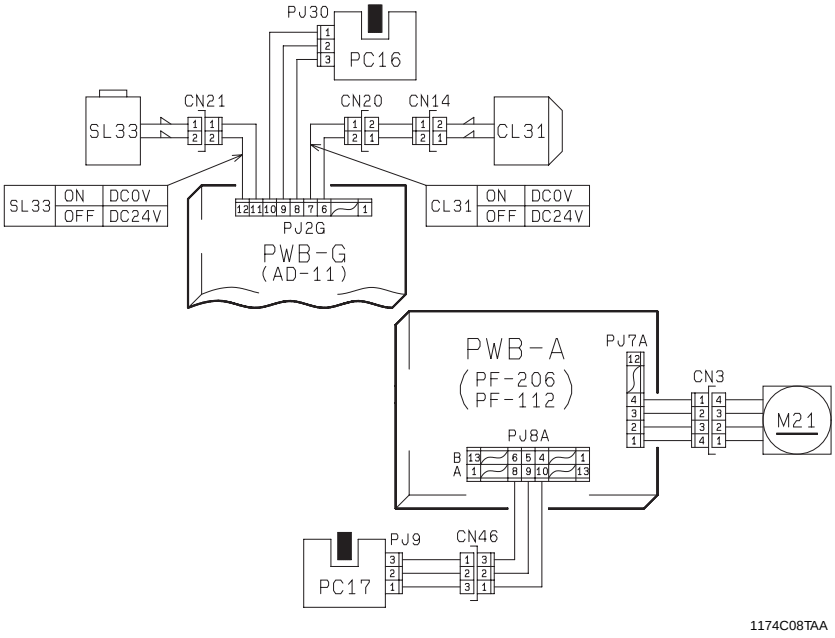

Duplex Unit Take-Up Misfeed Clearing Procedure

Symptom	Step	Check Item	Result	Action
• Paper is not taken up at all.	1	Is the paper curled, waved, or damp?	YES	Change the paper. Instruct the user in how to store the paper.
	2	Is Duplex Unit Pick-Up Solenoid SL33 energized when paper take-up is about to occur? ✻ Slide out the Duplex Unit and remove the PWB Cover. Then, slide the Duplex Unit back into the copier. Does the voltage across PJ2G-12 on PWB-G and GND change from DC24V to DC0V when the Start Key is pressed in the above condition?	YES	Adjust the stroke of the Solenoid or check the pick-up mechanism.
			NO	Replace PWB-G or PWB-A of PF-206/PF-112/PF-6D.
	3	Is Duplex Unit Paper Take-Up Clutch CL31 energized when a copy is taken up and fed into the copier from the Duplex Unit? ✻ Slide out the Duplex Unit and remove the PWB Cover. Then, slide the Duplex Unit back into the copier. Does the voltage across PJ2G-7 on PWB-G and GND change from DC24V to DC0V when the Start Key is pressed in the above condition?	YES	Check the Clutch.
			NO	Replace PWB-G or PWB-A of PF-206/PF-112/PF-6D.
	4	Are the Take-Up Roll, Feed Roll, and Separator Roll deformed, worn, or dirty with paper dust?	YES	Clean or replace the Rolls.
• Paper is stationary near the Vertical Transport Section.	5	Is Vertical Transport Motor M21 turning when a copy is taken up and fed into the copier from the Duplex Unit?	NO	Check for possible overload. Check the Duplex Unit drive coupling, or replace PWB-A of PF-206/PF-112/PF-6D, PWB-G, and/or M21.
	6	Are the Vertical Transport Rollers and Guide Plate deformed, worn, or dirty with paper dust?	YES	Clean or replace the Vertical Transport Rollers and Guide Plate.
	7	Check Duplex Unit Paper Take-Up Sensor PC16. (AD-11) PWB-G IC1G PC0.	NO	Check the Actuator for operation. Check PC16.
	8	Check Vertical Transport Sensor 3 PC17. See p. T-2 (PF-206/PF-112/PF-6D) PWB-A IC1A PC3.	YES	Replace PWB-G or PWB-A of PF-206/PF-112/PF-6D.
			NO	Check the Actuator for operation. Check PC17.

4 MALFUNCTIONS

4-1. Self-Diagnostic Function

The copier CPU is capable of self-diagnosis of the copier conditions and, when detecting a malfunction, it shows the corresponding malfunction code across the Zoom Ratio Indicator and Multi-Copy Display. Each malfunction code indicates the particular part which has developed a malfunction and the type of malfunction. A listing follows showing all malfunction codes and the description and possible causes of each malfunction.

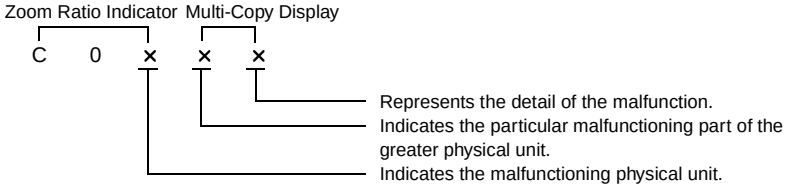

- Malfunctions can be reset by the following procedure.

Malfunction Resetting Procedure

- *Open and close the Front Door. The Trouble Reset Switch must be pressed after the Power is switched ON to reset the malfunction of the Fusing and Exposure Lamp Sections.*
- *Disconnect and connect the option or open and close the option door for malfunctions of options.*

✻ Copier/Paper Feed Cabinet (Option)

	Code	Description	Detection Timing
Drive	C0000	Main Drive Motor's failure to turn	The lock signal remains HIGH for a continuous 1 second or more period while M2 is energized.
	C0001	Main Drive Motor turning at abnormal timing	The lock signal remains LOW for a continuous 1 second or more period while M2 is deenergized.
	C0010	PC Drive Motor's failure to turn	The lock signal remains HIGH for a continuous 1 second or more period while M1 is energized.
	C0011	PC Drive Motor turning at abnormal timing	The lock signal remains LOW for a continuous 1 second or more period while M1 is deenergized.
	C004C	Cooling Fan Motor's failure to turn	The lock signal remains HIGH for a continuous 3 second or more period while M9 is energized (it turns at high speed).
	C0070	Toner Replenishing Motor's failure to turn	• Toner Hopper Home Position Sensor PC112 does not go from LOW to HIGH within 12 seconds after M8 has been energized. • PC112 does not go LOW within 12 seconds after M8 has been energized and PC112 gone HIGH.
	C0071	Toner Replenishing Motor turning at abnormal timing	PC112 is HIGH 2 seconds after M8 has been de energized.

✻ Copier/Paper Feed Cabinet (Option)

	Code	Description	Detection Timing
Exposure Lamp	C0400	Exposure Lamp's failure to turn ON	The output from AE Sensor Board PWB-H does not become 4.3V or less for the period between when LA1 turns ON and the Scanner starts a scan motion and when the Scanner reaches the Image Leading Edge position.
	C0410	Exposure Lamp turning ON at abnormal timing	With LA1 OFF, the output from PWB-H remains 4.1V or less for a continuous 2 second period at any timing while the Scanner is at the home position or the Original Cover is lowered.
Fusing Unit	C0500	Warm-up failure	If a given period of time has elapsed during warming-up, the surface temperature of the Upper Fusing Roller does not reach: • 50°C within 20 seconds; • 90°C within 20 seconds after it has reached 50°C; or • 150°C within 20 seconds after it has reached 90°C. The copier does not complete its warming-up cycle within 15 seconds after the above surface temperature has reached 150°C.
	C0510	Abnormally low fusing temperature	• The surface temperature of the Upper Fusing Roller remains less than 135°C for a continuous 1 second or more period after the copier has warmed up. • The surface temperature of the Upper Fusing Roller remains less than 80°C for a continuous 1 second or more period while in energy saving mode.
	C0520	Abnormally high fusing temperature	The surface temperature of the Upper Fusing Roller remains 230°C or more after the copier has warmed up.
Optical Section	C0600	Scanner Motor malfunction	• When the Scanner is at a position other than home, Scanner Reference Position Sensor PC81 does not go from HIGH to LOW after the lapse of 20 seconds after the Power Switch has been turned ON. • When the Scanner is at the home position, PC81 does not go from LOW to HIGH after the lapse of 5 seconds after the Scanner has started a scan motion. • PC81 does not go from HIGH to LOW after the lapse of 20 seconds after the Scanner has started a scan motion.
	C0610	Lens Motor malfunction	The output from Lens Reference Position Sensor PC90 does not go from HIGH to LOW, or vice versa, after the lapse of 15 seconds after M6 has started turning.
	C0620	Mirror Motor malfunction	• The output from the Mirror Reference Position Sensor PC86 does not go from HIGH to LOW after the lapse of 10 seconds after M7 has started turning. • The output from PC86 does not go from LOW to HIGH after the lapse of 3 seconds after M7 has started turning.
Sensors	C0F10	Faulty AE Sensor level	The output from PWB-H does not fall within the 2V – 4V range during the initial F5 mode.
	C0F30	ATDC Sensor malfunction	The output from UN3 remains 0.4V or less, or 4.6V or more, for a continuous 2 second period 2 seconds after PC Drive Motor M2 has started turning.

✻ Malfunctions Detected by Copiers, Except in Europe

	Code	Description	Detection Timing
Original Size Detecting Board	C0F02	Original size detection error (Defective CPU)	• Either UN2 is faulty or a communication error occurs with PWB-A. • Under normal conditions: The fixed-cycle pulse signal (Busy) remains HIGH or LOW for 3 seconds or more. • When the Power Switch is ON: The Busy signal remains HIGH or LOW for 5 seconds or more.
	C0FE2	Original Size Detecting Sensor ❷ failure	<Detection Timing> After having read the output data from PC113 to PC116, UN2 determines that there is a failure. <Sensor Layout> (Metric Areas) • ❷: PC113, ❸: PC115 (option), ❹: PC114, ❺: PC116 (option) ✻ PC115 and PC116 are standard for Mixed inch/metric areas. • A to E: Sensor locations 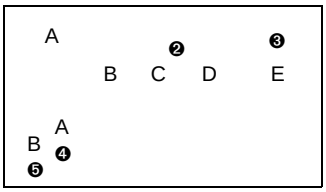 (Inch Areas) • ❷: PC113, ❸: PC115 (option), ❹: PC114, ❺: PC116 (option) 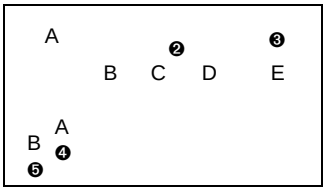
	C0FE4	Original Size Detecting Sensor ❸ failure	
	C0FE6	Original Size Detecting Sensors ❷ and ❸ failure	
	C0FE8	Original Size Detecting Sensor ❹ failure	
	C0FEA	Original Size Detecting Sensors ❷ and ❹ failure	
	C0FEC	Original Size Detecting Sensors ❸ and ❹ failure	
	C0FEE	Original Size Detecting Sensors❷, ❸ and ❹ failure	
	C0FF0	Original Size Detecting Sensor ❺ failure	
	C0FF2	Original Size Detecting Sensors ❷ and ❺ failure	
	C0FF4	Original Size Detecting Sensors ❸ and ❺ failure	
	C0FF6	Original Size Detecting Sensors ❷, ❸ and ❺ failure	
	C0FF8	Original Size Detecting Sensors ❹ and ❺ failure	
	C0FFA	Original Size Detecting Sensors ❷, ❹ and ❺ failure	
	C0FFC	Original Size Detecting Sensors ❸, ❹ and ❺ failure	
	C0FFE	Original Size Detecting Sensors ❷, ❸, ❹ and ❺ failure	

	Code	Description	Detection Timing
PF-206	C0900	3rd Drawer Paper Lift-Up Sensor malfunction	See the PF-206 Service Manual.
	C0904	3rd Drawer Paper Lift-Up Motor malfunction	
	C0950	4th Drawer Paper Lift-Up Sensor malfunction	
	C0954	4th Drawer Paper Lift-Up Motor malfunction	
AD-11/PF-6D	C0d00	Duplex Unit Front/Rear Edge Guide Plates home position detection failure	See the AD-11/PF-6D Service Manual.
	C0d20	Duplex Unit Trailing Gate Unit home position detection failure	
	C0d50	Duplex Unit Drive Motor's failure to turn	
	C0d51	Duplex Unit Drive Motor turning at abnormal timing	

	Code	Description	Detection Timing
PF-112	C0990	Main Tray upward motion failure	See the PF-112 Service Manual.
	C0991	Main Tray downward motion failure	
	C0992	Main Tray downward motion failure	
	C0993	Main Tray upward motion failure	
	C0994	Main Tray Elevator Motor's failure to turn	
	C0996	3rd Drawer lock release failure	
	C0998	Shifter transfer failure	
	C0999	Shifter return failure	
	C099A	Shifter return failure	
	C099b	Shifter transfer failure	
	C099c	Shifter Motor's failure to turn	
	C0F79	• 3rd Drawer Paper Empty Sensor failure • Main Tray Paper Empty Board failure • Shift Tray Paper Empty Sensor	
	C099E	Shift Gate position detecting failure	
	C099F	Shift Gate position detecting failure	

✻ Malfunctions for Other Options

	Code	Description	Detection Timing
ST-104	C0b10	Faulty Paper Clamp Unit movement	See the ST-104/S-106 Service Manual.
	C0b11	Faulty Paper Clamp Unit movement	
	C0b30	Paper Aligning Motor malfunction (Paper Aligning Bar remaining at home position)	
	C0b31	Paper Aligning Motor malfunction (Paper Aligning Bar not at home position)	
	C0b50	Improper stapling action (Stapler Arm remaining at the home position)	
	C0b51	Improper stapling action (Stapler Arm not at home position)	
	C0b52	Improper stapling action (stapling action occurring with no staples driven into the paper)	
ST-104/S-106	C0b60	Faulty Bin movement (Defective Bin Moving Motor)	
	C0b61	Faulty Bin movement (Defective drive)	
	C0b62	Faulty Bin movement (Defective Bin Positioning Sensor)	
	C0b63	Faulty Bin movement (Defective Bin Lower Limit Position Sensor)	
	C0b64	Faulty Bin movement (M1 speed detection failure)	

4-2. Troubleshooting Procedures

(1) C0000: Main Drive Motor's failure to turn
C0001: Main Drive Motor turning at abnormal timing

Symbol	Name
M2	Main Drive Motor
PWB-A	Master Board

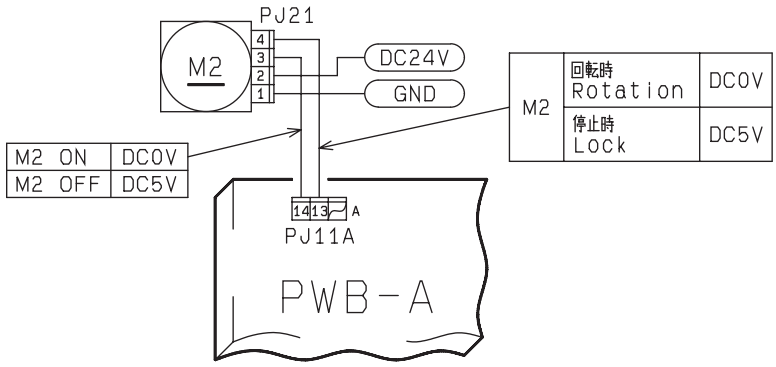

1174C25TAA

Step	Check Item	Result	Action
1	Is C0001 being shown?	YES	Begin with step 5.
2	Does M2 start to turn when the Start Key is pressed?	NO	Check rolls/rollers and gears for possible overload.
3	Does the voltage across PJ11A-14A on PWB-A and GND change from DC5V to DC0V when the Start Key is pressed?	NO	Replace PWB-A.
4	Does the voltage across PJ11A-13A on PWB-A and GND remain DC5V when the Start Key is pressed?	YES	Replace M2.
		NO	Replace PWB-A.
5	Does the voltage across PJ11A-14A on PWB-A and GND remain DC0V when the Power Switch is turned ON?	YES	Replace PWB-A.
6	Does the voltage across PJ11A-13A on PWB-A and GND remain DC0V when the Power Switch is turned ON?	YES	Replace M2.
		NO	Replace PWB-A.

(2) C0010: PC Drive Motor's failure to turn
C0011: PC Drive Motor turning at abnormal timing

Symbol	Name
M1	PC Drive Motor
PWB-A	Master Board

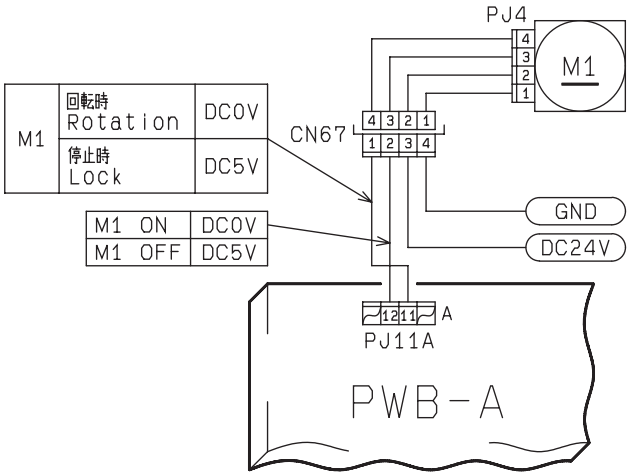

1174C26TAA

Step	Check Item	Result	Action
1	Is C0011 being shown?	YES	Begin with step 5.
2	Does M1 start to turn when the Start Key is pressed?	NO	Check gears for possible overload.
3	Does the voltage across PJ11A-12A on PWB-A and GND change from DC24V to DC0V when the Start Key is pressed?	NO	Replace PWB-A.
4	Does the voltage across PJ11A-11A on PWB-A and GND remain DC5V when the Start Key is pressed?	YES	Replace M1.
		NO	Replace PWB-A.
5	Does the voltage across PJ11A-12A on PWB-A and GND remain DC0V when the Power Switch is turned ON?	YES	Replace PWB-A.
6	Does the voltage across PJ11A-11A on PWB-A and GND remain DC0V when the Power Switch is turned ON?	YES	Replace M1.
		NO	Replace PWB-A.

(3) C004C: Cooling Fan Motor's failure to turn

Symbol	Name
M9	Cooling Fan Motor
PWB-A	Master Board

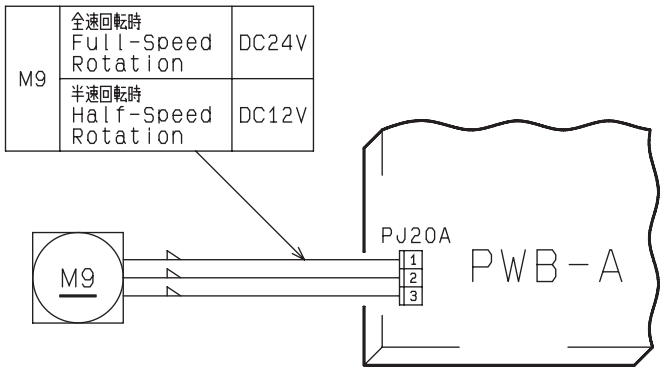

1174C27TAA

C004C

Step	Check Item	Result	Action
1	Does the voltage across PJ20A-1 on PWB-A and GND change from DC24V to DC12V when the Power is switched ON?	YES	Replace M9.
		NO	Replace PWB-A.

(4) C0070: Toner Replenishing Motor's failure to turn
C0071: Toner Replenishing Motor turning at abnormal timing

Symbol	Name
PC112	Toner Hopper Home Position Sensor
M8	Toner Replenishing Motor
PWB-A	Master Board

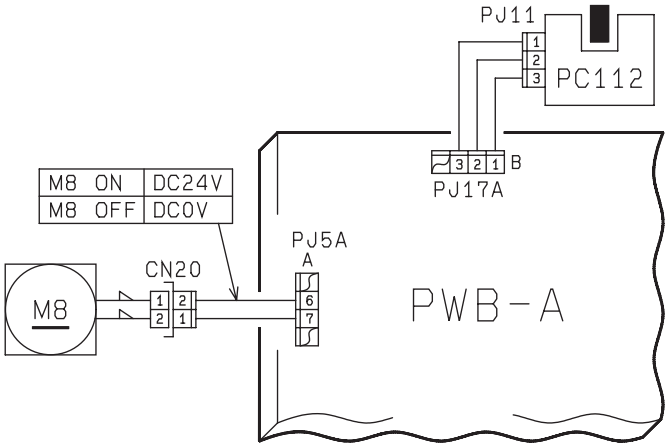

1174C28TAA

Step	Check Item	Result	Action
1	Is C0071 being shown?	YES	Begin with step 3.
2	Does the Toner Bottle turn when two or three copies are made with the Original Cover raised?	YES	Perform step 3.
		NO	Perform step 4.
3	Make two or three copies with the Original Cover raised. Does the voltage across PJ17A-2B on PWB-A and GND change to DC0V when the Toner Bottle is stopped and to DC5V when the Bottle is turned during the copy cycle?	YES	Replace PWB-A.
		NO	Check the Bottle Holder or PC112.
4	Make two or three copies with the Original Cover raised. Does the voltage across PJ5A-6A on PWB-A and GND change to DC0V when the Toner Bottle is stopped and to DC24V when the Bottle is turned during the copy cycle?	YES	Replace M8.
		NO	Replace PWB-A.

(5) C0400: Exposure Lamp's failure to turn ON
C0410: Exposure Lamp turning ON at abnormal timing

Symbol	Name
LA1	Exposure Lamp
TF2	Exposure Lamp Thermal Fuse
PWB-A	Master Board
PWB-H	AE Sensor Board
PU1	Exposure Lamp Regulator

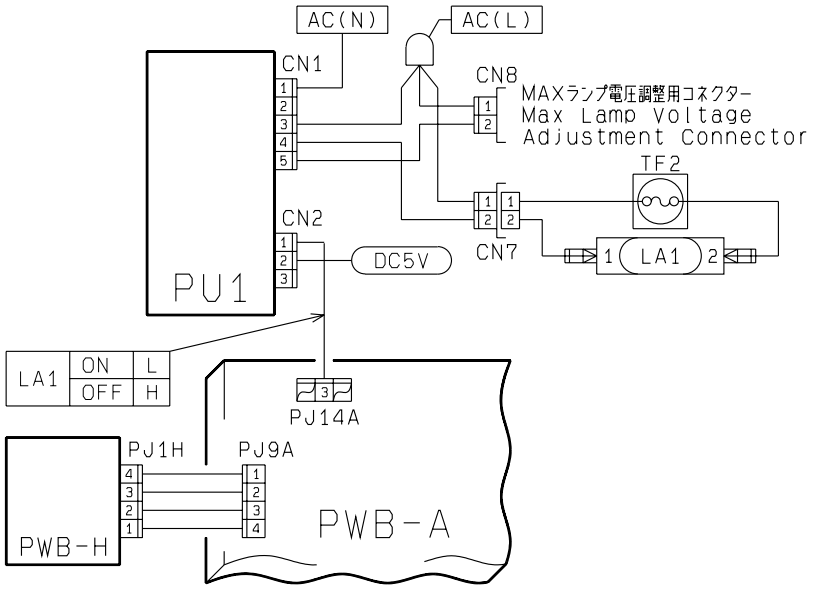

C0400

Step	Check Item	Result	Action
1	Does LA1 light up when the Start Key is pressed?	YES	Check the photo receiver of the AE Sensor for contamination. Replace PWB-H or PWB-A.
2	Does the voltage across PJ14A-3 on PWB-A and GND become DC4.3V or less when LA1 turns ON?	NO	Replace PWB-A.
3	Disconnect CN7 (2P). Is there continuity across CN7-1 and 2 on the LA1 side?	NO	Check LA1 and TF2 for continuity.
4	Is the voltage across CN1-1 and 3 on PU1 AC100V?	YES	Replace PU1.
		NO	Check Power Supply Unit PU2 and Power Supply Board PWB-C.

C0410

Step	Check Item	Result	Action
1	Does LA1 turn ON when the Power Switch is turned ON or in the standby state?	NO	Check to see if the photo receiver of the AE Sensor is receiving extraneous light. Replace PWB-H or PWB-A.
2	Does the voltage across PJ14A-3 on PWB-A and GND remain DC4.1V or lower when the Power Switch is turned ON or in the standby state?	YES	Replace PWB-A.
		NO	Replace PU1.

(6) C0500: Warm-up failure
C0510: Abnormally low fusing temperature
C0520: Abnormally high fusing temperature

Symbol	Name
H1	Fusing Heater Lamp
TS1	Fusing Thermoswitch
TH1	Fusing Thermistor
PWB-A	Master Board
SSR1	Fusing Heater Lamp SSR

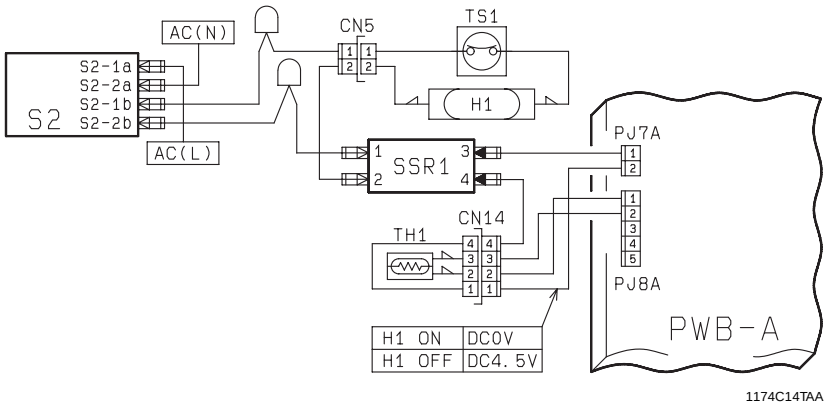

C0500, C0510

✻ After resetting a C0510 condition, C0500 will be shown if the same problem recurs. For this reason, the same troubleshooting procedure is used for C0500 and C0510.

Step	Check Item	Result	Action
1	Does H1 light up when the Power Switch is turned ON?	YES	Check TH1 for installation or clean it.
		NO	Begin with step 3.
2	Disconnect CN14 (4P). Is the resistance across CN14-2 and 3 on the TH1 side infinity?	YES	Replace TH1.
		NO	Replace PWB-A.
3	Does the voltage across PJ7A-2 on PWB-A and GND change from DC5V to DC0V when the Front Door is closed with the Power Switch ON?	NO	Replace PWB-A.
4	Disconnect CN5 (2P). Is there continuity across CN5-1 and 2 on the Fusing Unit side?	YES	Replace SSR1.
		NO	Check H1 and TF1 for continuity.

C0520

Step	Check Item	Result	Action
1	Does H1 remain lit up even after the copier has completed warming up?	YES	Begin with step 2.
		NO	Begin with step 3.
2	Does the voltage across PJ7A-2 on PWB-A and GND remain DC0V even after the copier has completed warming up?	YES	Replace PWB-A.
		NO	Replace SSR1.
3	Disconnect CN14 (4P). Is the circuit across CN14-2 and 3 on the Fusing Unit side short-circuited?	YES	Replace TH1.
		NO	Replace PWB-A.

(7) C0600: Scanner Motor malfunction
C0610: Lens Motor malfunction
C0620: Mirror Motor malfunction

Symbol	Name
M5	Scanner Motor
M6	Lens Motor
M7	Mirror Motor
PC81	Scanner Reference Position Sensor
PC86	Mirror Reference Position Sensor
PC90	Lens Reference Position Sensor
PWB-A	Main Control Board
PWB-F	23 cpm Copier Motor Drive Board
PWB-E	15/18 cpm Copier Motor Drive Board

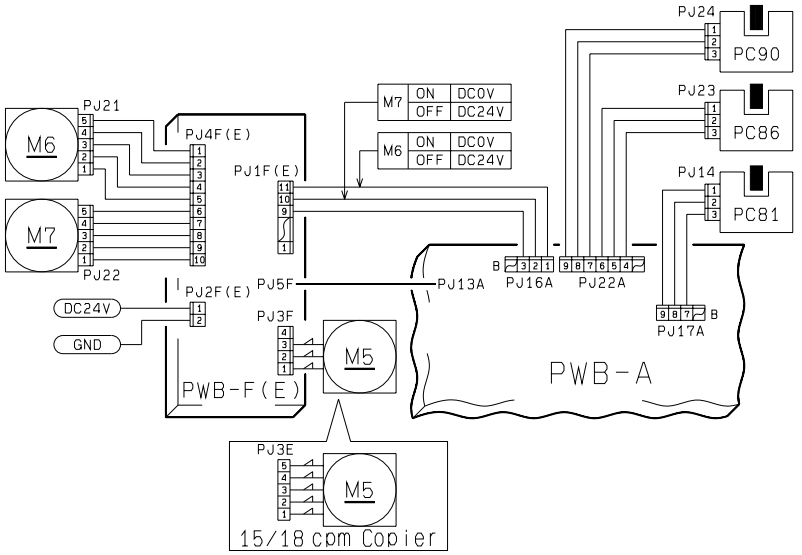

C0600

Step	Check Item	Result	Action
1	Are all connectors on Motor Drive Board plugged in securely?	NO	Plug them in securely.
2	Check Scanner Reference Position Sensor PC81. See p. T-2 (PWB-A (IC4A) APB0)	YES	Check the Scanner Drive Cable for tension and overload. Or, replace PWB-A.
		NO	Check PC81.
3	Is the Scanner drive faulty?	YES	Correct or replace the faulty part.
		NO	Replace Motor Drive Board or M5.

C0610

Step	Check Item	Result	Action
1	Does M6 start turning after the Power Switch has been turned ON?	YES	Perform step 4.
2	Does the voltage across PJ16A-1B on PWB-A and GND change from DC24V to DC0V after the Power Switch has been turned ON?	YES	Replace Motor Drive Board or M6.
		NO	Replace PWB-A.
3	Check Lens Reference Position Sensor PC90. See p. T-2 (PWB-A (IC4A) APB1)	YES	Check the Lens Drive Cable for tension and overload. Or, replace PWB-A.
		NO	Check PC90.

C0620

Step	Check Item	Result	Action
1	Does M7 start turning when the mirror is out of position and the Power Switch is turned ON?	YES	Perform step 3.
2	Does the voltage across PJ16A-2B on PWB-A and GND change from DC24V to DC0V when the Mirror moves?	YES	Replace Motor Drive Board or M7.
		NO	Replace PWB-A.
3	Check Mirror Reference Position Sensor PC86. See p. T-2 (PWB-A (IC4A) APB2)	YES	Check for overload. Or, replace PWB-A.
		NO	Check PC86.

(8) C0900: 3rd Drawer Paper Lift-Up Sensor malfunction
C0904: 3rd Drawer Paper Lift-Up Motor malfunction
C0950: 4th Drawer Paper Lift-Up Sensor malfunction
C0954: 4th Drawer Paper Lift-Up Motor malfunction

Symbol	Name
PC19	3rd Drawer Paper Lift-Up Sensor
PC23	4th Drawer Paper Lift-Up Sensor
PC27	3rd Drawer Paper Lift-Up Motor Pulse Sensor
PC28	4th Drawer Paper Lift-Up Motor Pulse Sensor
M24	3rd Drawer Paper Lift-Up Motor
M25	4th Drawer Paper Lift-Up Motor
PWB-A	PF-206 Master Board

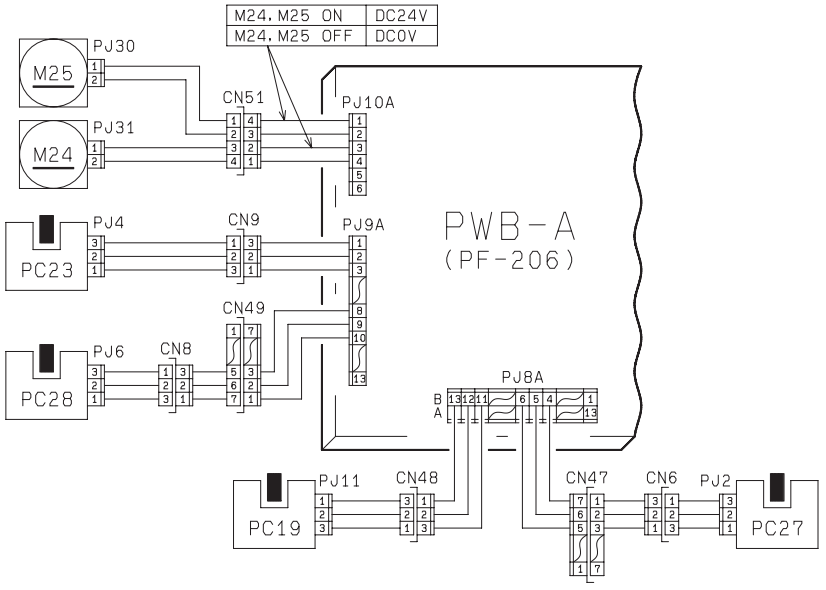

C0900, C0950

Step	Check Item	Result	Action
1	Is C0950 being shown?	YES	Perform step 3.
2	Check 3rd Drawer Paper Lift-Up Sensor PC19. See p. T-2 (PF-206) PWB-A IC1A PG3.	YES	Replace PF-206 PWB-A.
		NO	Check the Paper Pressure Releasing mechanism and PC19.
3	Check 4th Drawer Paper Lift-Up Sensor PC23. See p. T-2 (PF-206) PWB-A IC1A PF3.	YES	Replace PF-206 PWB-A.
		NO	Check the Paper Pressure Releasing mechanism and PC23.

C0904, C0954

Step	Check Item	Result	Action
1	Is C0954 being shown?	YES	Begin with step 5.
2	Slide out the 3rd Drawer and slide it back into the copier. Does M24 turn at this time?	YES	Perform step 4.
3	Does the voltage across PJ10A-3 on PF-206 PWB-A and GND change from DC0V to DC24V, and then back to DC0V again, after the 3rd Drawer has been slid back into the copier?	YES	Replace M24.
		NO	Replace PF-206 PWB-A.
4	Check 3rd Drawer Paper Lift-Up Motor Pulse Sensor PC27. See p. T-2 (PF-206) PWB-A IC1A PC1.	YES	Replace PF-206 PWB-A. Or, check the gears for possible overload.
		NO	Check the Pulse Disk and PC27.
5	Slide out the 4th Drawer and slide it back into the copier. Does M25 turn at this time?	YES	Perform step 7.
6	Does the voltage across PJ10A-1 on PF-206 PWB-A and GND change from DC0V to DC24V, and then back to DC0V again, after the 4th Drawer has been slid back into the copier?	YES	Replace M25.
		NO	Replace PF-206 PWB-A.
7	Check 4th Drawer Paper Lift-Up Motor Pulse Sensor PC28. See p. T-2 (PF-206) PWB-A IC1A PD1.	YES	Replace PF-206 PWB-A. Or, check the gears for possible overload.
		NO	Check the Pulse Disk and PC28.

(9) C0990: Main Tray Upward Motion Failure
C0991: Main Tray Downward Motion Failure
C0992: Main Tray Downward Motion Failure
C0993: Main Tray Upward Motion Failure
C0994: Main Tray Elevator M26's Failure to Turn

Symbol	Name
PC2	Main Tray Lower Position Sensor
PC5	Elevator Motor Pulse Sensor
PC19	3rd Drawer Paper Lift-Up Sensor
PC35	Lower Position Sensor
M26	Elevator Motor
PWB-H	Cabinet Transport Board
PWB-A	PF-112 Master Board

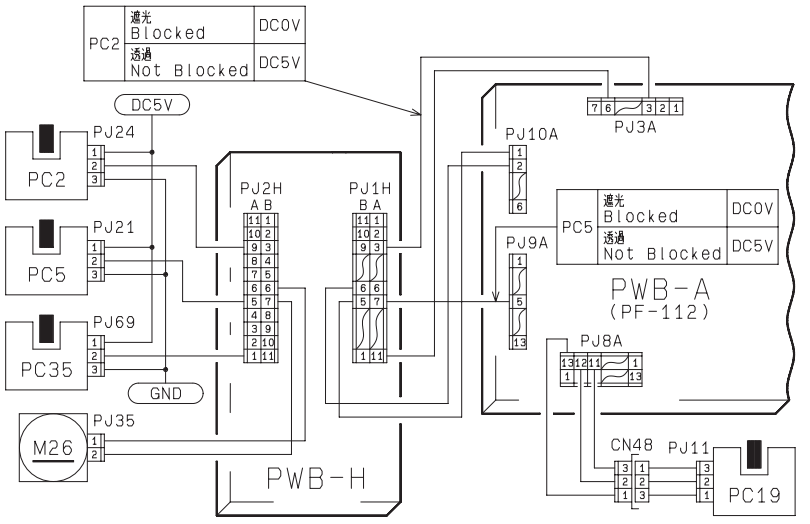

1174C17TAA

C0990, C0991

Step	Check Item	Result	Action
1	Check 3rd Drawer Paper Lift-Up Sensor PC19. See p. T-2 (PF-112) PWB-A IC1A PG3.	YES	Replace PF-112 PWB-A.
		NO	Check the Paper Pressure Releasing mechanism and PC19.

C0992, C0993

Step	Check Item	Result	Action
1	Check Lower Position Sensor PC35. See p. T-2. (PF-112) PWB-A IC2A PB3	YES	Replace PF-112 PWB-A.
		NO	Check PC35.
2	Check Main Tray Lower Position Sensor PC2. See p. T-2. (PF-112) PWB-A IC2A PC1	YES	Replace PF-112 PWB-A.
		NO	Check PC2.

C0994

Step	Check Item	Result	Action
1	Does M26 turn when the Paper Descent key is pressed?	YES	Perform step 3.
2	Does the voltage across PJ10A-1 (down) on PF-112 PWB-A and GND, and across PJ10A-2 (up) and GND, change from DC0V to DC24V when the Drawer is slid in or the Paper Descent key is pressed?	YES	Replace M26 or check PWB-H and flat cable.
		NO	Replace PF-112 PWB-A.
3	Does the voltage across PJ9A-5 on PF-112 PWB-A and GND change in the range between DC0V and DC5V while M26 is turning?	YES	Replace PF-112 PWB-A.
		NO	Check the pulse disk, Gear, and Sensor.

(10) C0998: Shifter Transfer Failure
C0999: Shifter Return Failure
C099A: Shifter Return Failure
C099b: Shifter Transfer Failure
C099c: Shifter Motor M27's Failure to Turn

Symbol	Name
PC3	Shifter Home Position Sensor
PC4	Shifter Return Position Sensor
PC6	Shift Motor Pulse Sensor
M27	Paper Shift Motor
PWB-H	Cabinet Transport Board
PWB-A	PF-112 Master Board

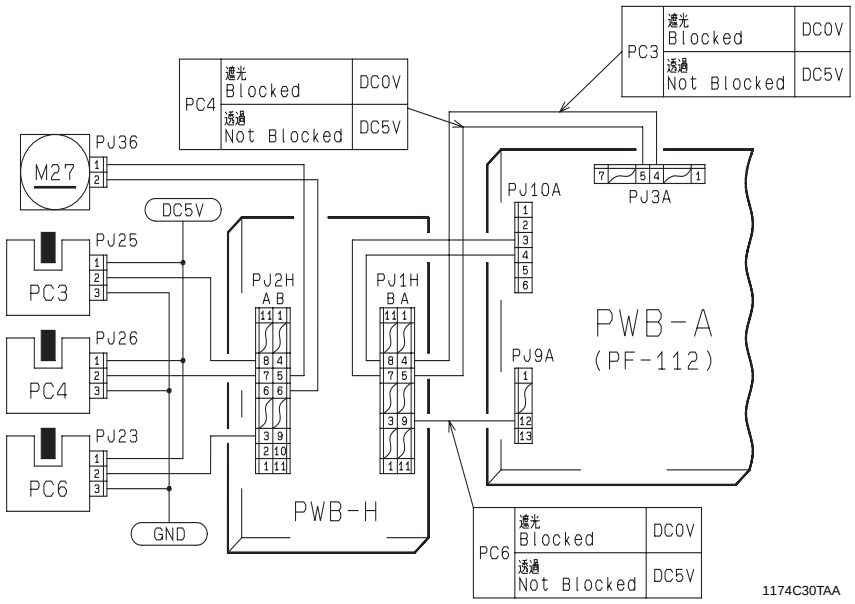

C0998, C0999

Step	Check Item	Result	Action
1	Check Shifter Return Position Sensor PC4. See p. T-2 (PF-112) PWB-A IC2A PD1.	YES	Replace PF-112 PWB-A.
		NO	Check PWB-H, flat cable and PC4.

C099A, C099b

Step	Check Item	Result	Action
1	Check Shifter Home Position Sensor PC3. See p. T-2 (PF-112) PWB-A IC2A PC0	YES	Replace PF-112 PWB-A.
		NO	Check PWB-H, flat cable and PC3.

C099C

Step	Check Item	Result	Action
1	Does M27 turn when the Drawer is slid in with a paper stack loaded in the Shift Tray?	YES	Perform step 3.
2	Does the voltage across PJ10A-4 (moving to right) on PF-112 PWB-A and GND change from DC0V to DC24V when doing step 1?	YES	Replace M27 or check PWB-H and flat cable.
		NO	Replace PF-112 PWB-A.
3	Does the voltage across PJ9A-12 on PF-112 PWB-A and GND change from DC0V to DC5V while M27 is turning?	YES	Replace PF-112 PWB-A.
		NO	Check the pulse disk, Gear, and Sensor.

(11) C099E: Shift Gate Position Detecting Failure
C099F: Shift Gate Position Detecting Failure
C0996: 3rd Drawer Lock Release Failure
C0F79: Paper Empty Sensor Failure

Symbol	Name
PC1	Shift Tray Paper Empty Sensor
PC7	3rd Drawer Set Sensor
PC20	3rd Drawer Paper Empty Sensor
PC34	Shift Gate Position Detecting Sensor
SL41	3rd Drawer Lock Solenoid
PWB-E	Main Tray Paper Empty Board
PWB-H	Cabinet Transport Board
PWB-A	PF-112 Master Board

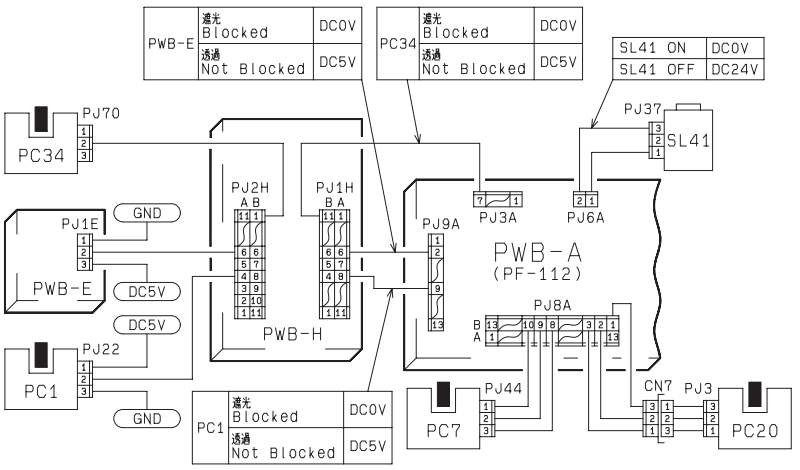

1174C31TAA

C099E, C099F

Step	Check Item	Result	Action
1	Check Shift Gate Position Detecting Sensor PC34. See p. T-2 (PF-112) PWB-A IC1A PC1.	YES	Replace PF-112 PWB-A.
		NO	Check PWB-H, flat cable and PC34.

C0996

Step	Check Item	Result	Action
1	Does the voltage across PJ6A-2 on PF-112 PWB-A and GND change from DC0V to DC24V when the Paper Descent Key is pressed and the Main Tray has completed downward motion?	YES	Replace SL41.
		NO	Replace PF-112 PWB-A.
2	Check 3rd Drawer Set Sensor PC7. See p. T-2 (PF-112) PWB-A IC1A PG2	YES	Replace PF-112 PWB-A.
		NO	Check PWB-H, flat cable and PC25.

C0F79

Step	Check Item	Result	Action
1	Check 3rd Drawer Paper Empty Sensor PC20. See p. T-2 (PF-112) PWB-A IC1A PC0.	YES	Replace PF-112 PWB-A.
		NO	Check PC20.
2	Check Main Tray Paper Empty Board PWB-E. See p. T-2 (PF-112) PWB-A IC1A PF3.	YES	Replace PF-112 PWB-A.
		NO	Check PWB-H, flat cable and PWB-E.
3	Check Shift Tray Paper Empty Sensor PC1. See p. T-2 (PF-112) PWB-A IC1A PD1	YES	Replace PF-112 PWB-A.
		NO	Check PWB-H, flat cable and PC1.

(12) C0d00: Duplex Unit Front/Rear Edge Guide Plates home position detection failure
C0d20: Duplex Unit Trailing Gate Unit home position detection failure
C0d50: Duplex Unit Drive Motor's failure to turn
C0d51: Duplex Unit Drive Motor turning at abnormal timing

Symbol	Name
PC8	Duplex Gate Home Position Sensor
PC9	Front/Rear Edge Guide Plate Home Position Sensor
M31	Duplex Unit Drive Motor
M32	Gate Motor
M33	Front/Rear Edge Guide Drive Motor
PWB-G	Duplex Unit Master Board

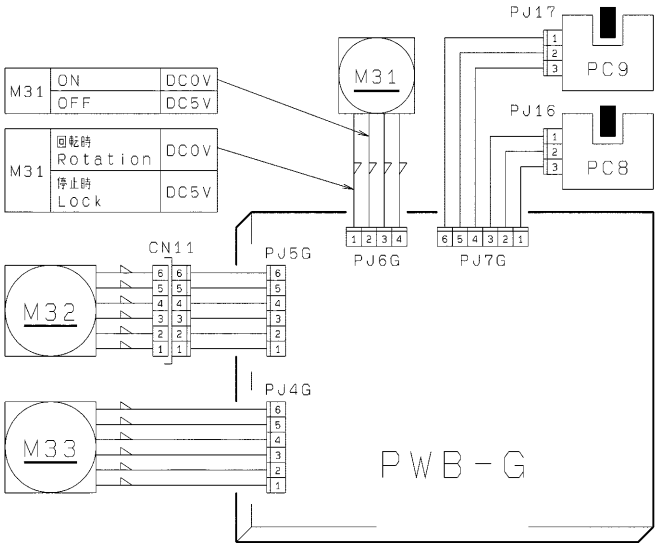

1151C11TAA

C0d00, C0d20

Step	Check Item	Result	Action
1	Is C0d20 being shown?	YES	Perform step 4.
2	Does Front/Rear Edge Guide Drive Motor M33 start turning when the Power Switch is turned ON or the Duplex Unit slid into position?	NO	Check for possible overload. Replace PWB-G, PWB-A of PF-206/PF-112/PF-6D, or M33.
3	Check Front/Rear Edge Guide plate Home position sensor PC9. See p. T-2 (AD-11) PWB-G IC1G PC3.	YES	Replace PWB-G or PWB-A of PF-206/PF-112/PF-6D.
		NO	Check PC9.
4	Does Gate Motor M32 start turning when the Power Switch is turned ON or the Duplex Unit slid into position?	NO	Check for possible overload. Replace PWB-G, PWB-A of PF-206/PF-112/PF-6D, or M32.
5	Check Duplex Gate Home Position Sensor PC8. See p. T-2 (AD-11) PWB-G IC1G PE0.	YES	Replace PWB-G or PWB-A of PF-206/PF-112/PF-6D.
		NO	Check PC8.

C0d50, C0d51

Step	Check Item	Result	Action
1	Is C0d51 being shown?	YES	Begin with step 5.
2	Does Duplex Unit Drive Motor M31 start turning when the Start Key is pressed.	NO	Check the roller, rolls, and gears for possible overload.
3	Does the voltage across PJ6G-2 on PWB-G and GND change from DC5V to DC0V when the Start Key is pressed?	NO	Replace PWB-G or PWB-A of PF-206/PF-112/PF-6D.
4	Does the voltage across PJ6G-1 on PWB-G and GND remain DC5V when the Start Key is pressed?	YES	Replace M31.
		NO	Replace PWB-G or PWB-A of PF-206/PF-112/PF-6D.
5	Does the voltage across PJ6G-2 on PWB-G and GND remain DC0V when the Power Switch is turned ON?	YES	Replace PWB-G or PWB-A of PF-206/PF-112/PF-6D.
6	Does the voltage across PJ6G-1 on PWB-G and GND remain DC0V when the Power Switch is turned ON?	YES	Replace M31.
		NO	Replace PWB-G or PWB-A of PF-206/PF-112/PF-6D.

(13) C0F10: Faulty AE Sensor level
C0F30: ATDC Sensor malfunction

Symbol	Name
PWB-A	Master Board
PWB-H	AE Sensor Board
UN3	ATDC Sensor

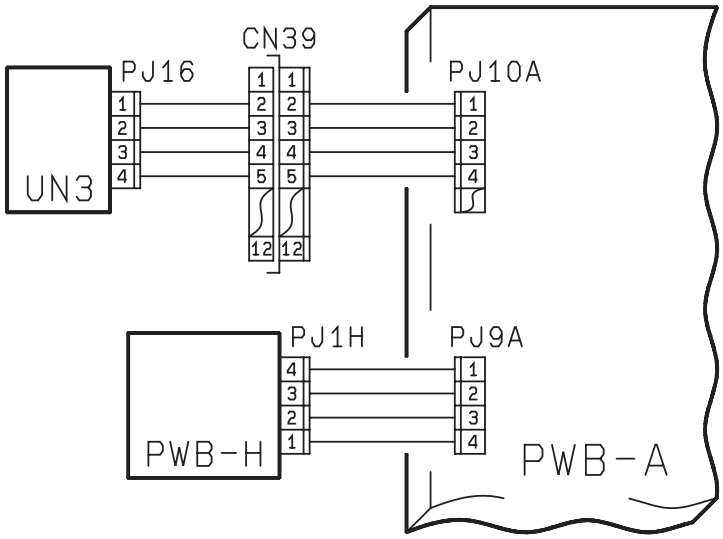

C0F10

Step	Check Item	Result	Action
1	Is the voltage across PJ9A-3 on PWB-A and GND in the range between DC2V and DC4V when the Start Key is pressed in the F3 operation?	YES	Replace PWB-A.
		NO	Check the photo receiver of the AE Sensor for contamination or replace PWB-H.

C0F30

Step	Check Item	Result	Action
1	Is the voltage across PJ10A-3 on PWB-A and GND DC0V after the Power Switch has been turned ON?	YES	Check the ATDC Sensor and the connection between the Imaging Unit and copier.
2	Is the voltage across PJ10A-3 on PWB-A and GND in the range between DC0.5V and DC4.5V after the Start Key has been pressed?	YES	Replace PWB-A.
		NO	Replace the ATDC Sensor.

(14) C0F02: Original size detection error (Defective CPU)
C0FE2 to C0FFE: Original Size Detecting Sensor failure

Symbol	Name
PC113	Original Size Detecting Sensor FD2
PC114	Original Size Detecting Sensor CD1
PC115	Original Size Detecting Sensor FD3
PC116	Original Size Detecting Sensor CD2
UN2	Original Size Detecting Board
PWB-A	Master Board

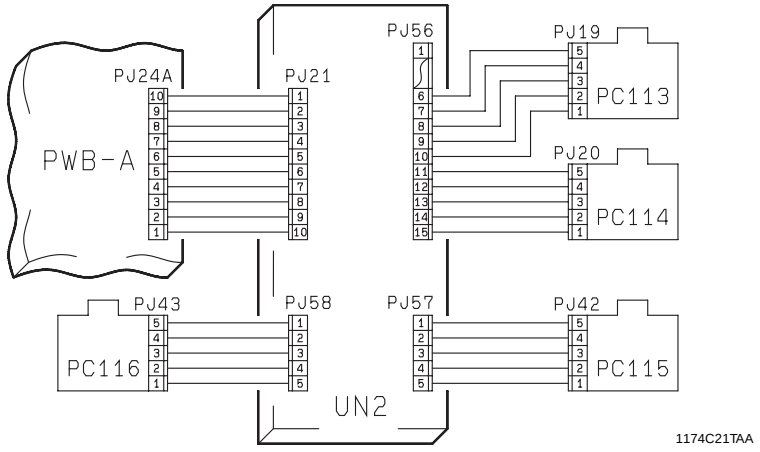

C0F02

Step	Check Item	Result	Action
1	Is the jumper connector fitted properly across J1 and J2 on UN2?	NO	• Change the position of the jumper connector.
2	Is PJ21 (CN2) plugged securely into UN2 and PJ24A into PWB-A?	NO	• Plug them in securely.
3	Does the LED of I/O port check PWB-A (IC5A) PA3 blink after the Power Switch has been turned ON?	YES	• Change PWB-A.
		NO	• Change UN2.

C0FE2 to C0FFE

Step	Check Item	Result	Action
1	Is the jumper connector fitted properly across J1 and J2 on UN2?	NO	• Change the position of the jumper connector.
2	Is each Original Size Detecting Sensor installed at the correct position?	NO	• Reinstall.
3	Is the malfunction code redisplayed after the corresponding Original Size Detecting Sensor has been changed?	YES	• Change UN2 or PWB-A.

(15) Power is not Turned ON

Symbol	Name
PWB-A	Master Board
PWB-C	Power Supply Board
PU1	Exposure Lamp Regulator
PU2	Power Supply Unit
S1	Power Switch
S2	Front Door Interlock Switch

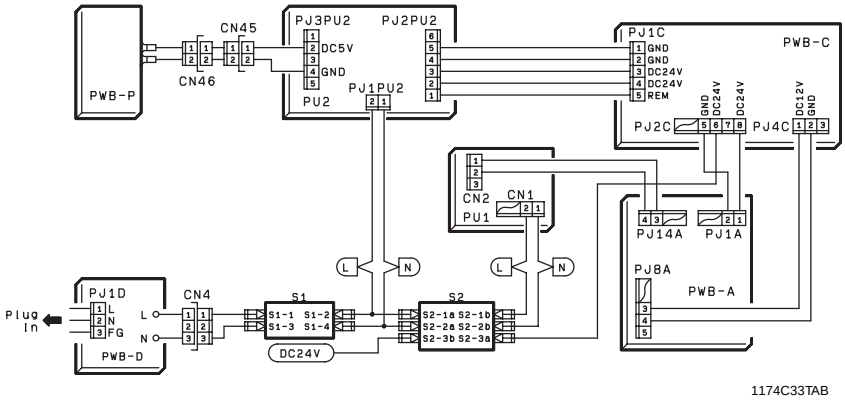

Symptom	Step	Check Item	Result	Action
Power is not supplied to the copier at all.	1	Is the source voltage being supplied to the circuit across PJ1-1 and 2 of PU2?	NO	Check Fuse or line voltage.
	2	Is the voltage across PJ2-2 of PU2 and GND, and across PJ2-3 on PU2 and GND, DC24V?	NO	Check Fuse of PU2 or replace PU2.
	3	Is the voltage across PJ2-1 of PU2 and GND DC24V?	NO	Check Fuse of PU2 or replace PU2.
	4	Is the voltage across PJ2C-6 on PWB-C and GND, and across PJ2C-8 on PWB-C and GND, DC24V?	NO	Check Fuse of PWB-C or replace PWB-C.
Only the control panel Indicators light up.	5	Only the control panel Indicators light up?	YES	Replace PWB-A.

✻ If the problem persists even after the above procedures, the harness is probably short-circuited.
Check the harnesses.

(16) E1, E2

Symbol	Name
UN3	ATDC Sensor
F4	I/U Fuse
PWB-A	Master Board

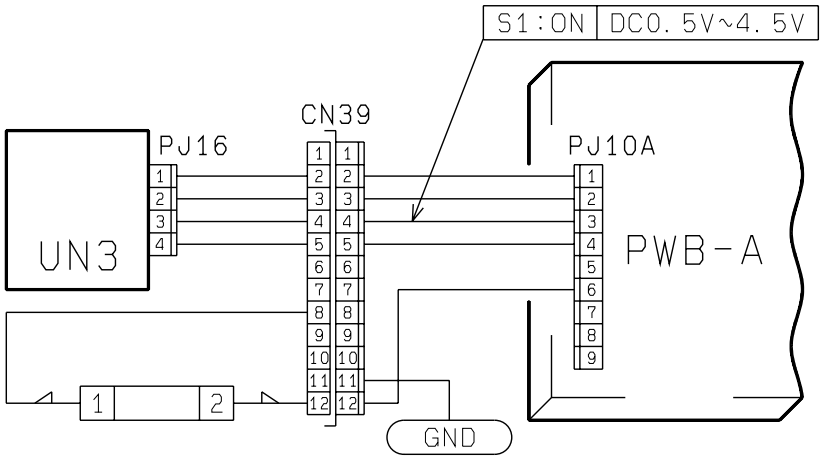

Code	Step	Check Item	Result	Action
E1	1	Is the seal peeled off the opening or starter been fully charged?	NO	Peel off the seal and turn the Power Switch OFF, then ON.
	2	Is the voltage across PJ10A-3 on PWB-A and GND in the range between DC0.5V and DC4.5V after the Start Key has been turned ON?	YES	Replace PWB-A.
			NO	Replace the ATDC Sensor.
E2	3	Is the voltage across PJ10A-6 on PWB-A and GND 0V?	YES	Replace PWB-A.
			NO	Replace F4 or PWB-A.

5 IMAGE FAILURES

5-1. Image Failure Troubleshooting

Image failures have many possible causes. For troubleshooting, it is necessary to determine whether a failure is attributable to a basic cause or any other cause.

In this chapter, troubleshooting is divided into “initial checks” and “troubleshooting procedures classified by image failure”. If an image failure has occurred, first make the initial checks, then proceed to the corresponding image failure troubleshooting procedure.

5-2. Initial Checks

1. Place of installation
- Is the source voltage normal? Does the voltage vary greatly?
- Is the copier installed in a hot, humid place or in a place where temperatures vary sharply?
- Is the copier installed in a dusty place?
- Is the copier subjected to direct sunlight?
- Is the copier level?

2. Copy paper
- Is the recommended paper used?
  ➨Load recommended paper and make copies to see if the problem persists.
- Is the paper damp?
  ➨Load new paper and make copies to see if the problem persists.

3. Original
- Does the original used have a reddish background or is it written in light pencil?
  ➨Use the Test Chart to check the image.
- Is the original transparent or are transparencies being used?
  ➨Cover with white paper and make a copy.
- Are the Original Glass and ADF Transport Belt dirty or scratched?
  ➨If dirty, clean with alcohol. If scratched, replace.

4. PM parts (supplies)
- Have the PM parts (supplies), such as the PC Drum, Cleaning Blade, and corona wires, reached the end of their cleaning/replacement cycles?

5. Adjustment items (registration, focus, AE level, etc.)
- Among the adjustment items given in DIS/REASSEMBLY, ADJUSTMENT, is there any adjustment that may remedy the image failure?

5-3. Troubleshooting Procedures Classified by Image Failures

<Image Failure Samples>

1. Blank copy

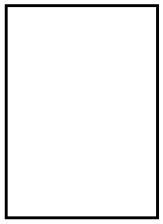

2. Black copy



3. Low image density

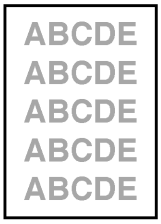

4. Foggy background

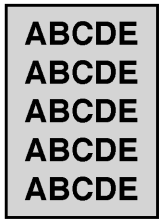

5. Black streaks or bands

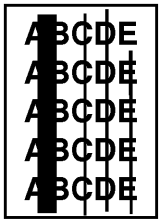

6. Black spots

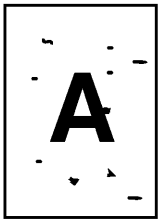

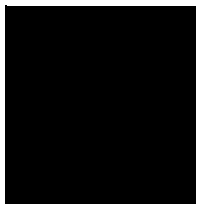

7. Blank streaks or bands

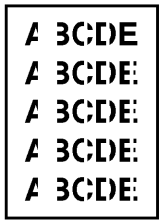

8. Void areas

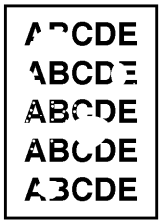

9. Smear on back

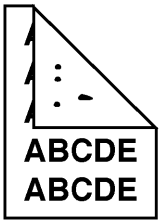

1149T012AA

(1) Blank copy

Cause	Step	Check Item	Result	Action
Charging failure	1	Is the PC Drum Charge Corona installed correctly?	NO	Install correctly.
	2	Are the PC Drum Charge Corona wire and grid mesh normal?	NO	Check and replace if necessary.
	3	Is the wiring between High Voltage Unit HV1 and corona wire normal?	YES	Replace HV1.
			NO	Correct the wiring.
Developing Unit out of position	4	Is the PC Unit inserted all the way into position?	NO	Fully tighten the knob.
	5	Are the Ds Rolls in contact with the PC Drum?	NO	Reinstall the Developing Unit.
	6	Is the Developing Unit connector plugged in?	NO	Plug it in.
	7	Is the drive transmission to the Developing Unit normal?	NO	Check and replace parts if necessary.
Image transfer failure	8	Is the Image Transfer Corona wire normal?	NO	Check and replace if necessary.
	9	Is the wiring between High Voltage Unit HV1 and corona wire normal?	YES	Replace HV1.
			NO	Correct wiring.
Paper guide shorting	10	Is the paper guide shorted to the frame?	YES	Connect the paper guide through the resistor to the frame.

(2) Black copy

Cause	Step	Check Item	Result	Action
PC Drum grounding failure	1	Is the PC Drum properly grounded?	NO	Clean or replace the PC Drum Ground Plate.
Developing bias failure	2	Is the developing bias contact normal?	NO	Clean or replace the developing bias contact.
	3	Is the developing bias harness normal?	YES	Replace the High Voltage Unit.
			NO	Replace the harness.
Light path failure	4	Has condensation formed on the mirrors, lens, or PC Drum?	YES	Clean the mirrors and lenses, and run the Drum Dehum operation.
	5	Are the mirrors installed properly?	NO	Reinstall the mirrors.
Exposure Lamp's failure to turn ON	6	Does the Exposure Lamp light up?	NO	Take the action for malfunction code C0400.

(3) Low Image Density

Cause	Step	Check Item	Result	Action
PC Drum life	1	Does the PC Drum have enough service life?	NO	Replace the PC Drum.
	2	Do the fan motors turn properly? (Ozone deterioration, temperature rise)	NO	Troubleshoot the fan motors.
PC Drum grounding failure	3	Is the PC Drum properly grounded?	NO	Clean or replace the PC Drum Ground Plate.
Drum charge failure	4	Are the PC Drum Charge Corona wire and grid mesh normal?	NO	Check and replace if necessary.
	5	Is the wiring between High Voltage Unit HV1 and corona wire normal?	YES	Replace HV1.
			NO	Correct the wiring.
Optical failure	6	Are the mirrors and lenses dirty or covered with condensation?	YES	Clean the mirrors and lenses.
Image transfer failure	7	Is the Image Transfer Corona dirty?	YES	Clean the Image Transfer Corona or replace the wire.
	8	Is the copy paper damp?	YES	Replace copy paper and instruct the user in how to store paper and to keep the copier plugged in during the night.
Developing failure	9	Is Db adjusted properly?	NO	Make Db adjustment.
	10	Are the Ds Rolls in contact with the PC Drum?	NO	Reinstall the Developing Unit.
	11	Is the developing bias contact normal?	NO	Clean or replace the developing bias contact.

(4) Foggy background

Cause	Step	Check Item	Result	Action
Cleaning failure	1	Is the Cleaning Blade dirty with foreign matter, paper dust, etc. or is it scratched?	YES	Change the Cleaning Blade.
Optical failure	2	Is the mirror or lens dirty?	YES	Clean the mirror or lens.
PC Drum failure	3	Is the PC Drum dirty with foreign matter, etc.?	YES	Clean or replace the PC Drum. Replace the Cleaning Blade if necessary.
	4	Is the PC Drum properly grounded?	NO	Clean or replace the PC Drum Ground Plate.
Developing failure	5	Is the Sleeve Roller abnormally dirty?	YES	Clean the Sleeve Roller. Check the Developer Scattering Prevention Seal to see if it is deformed or dirty.
	6	Is the developing bias contact normal?	NO	Clean or replace the developing bias contact.
Main Erase Lamp failure	7	Does the Main Erase Lamp light up properly?	NO	Replace the Main Erase Lamp.
	8	Is the Main Erase Lamp dirty?	YES	Clean the Main Erase Lamp.

(5) Black Streaks or Bands

Cause	Step	Check Item	Result	Action
Uneven charging	1	Are the PC Drum Charge Corona wire and grid mesh dirty?	YES	Clean or replace the PC Drum Charge Corona. Check the operation of the toner charging mechanism.
Cleaning failure	2	Is the Cleaning Blade dirty with foreign matter, paper dust, etc., or is it scratched?	YES	Replace the Cleaning Blade.
	3	Does the Cleaning Blade make a correct lateral motion?	NO	Check the operation of the Cleaning Blade.
PC Drum failure	4	Is the PC Drum surface dirty or scratched?	YES	Replace the PC Drum. If necessary, replace the Cleaning Blade.
PC Drum Paper Separator Fingers	5	Are the PC Drum Paper Separator Fingers dirty, deformed or faulty in operation?	YES	Clean or replace the PC Drum Paper Separator Fingers.
Fusing failure	6	Is the Upper Fusing Roller dirty or scratched?	YES	Clean or replace the Upper Fusing Roller.
	7	Are the Upper Paper Separator Fingers dirty or deformed?	YES	Clean or replace the Upper Paper Separator Fingers.
Optical failure	8	Is the mirror or lens dirty with foreign matter?	YES	Clean the mirror or lens.

(6) Black Spots

Cause	Step	Check Item	Result	Action
PC Drum failure	1	Is the PC Drum surface scratched or dirty with foreign matter?	YES	Clean or replace the PC Drum. If necessary, replace the Cleaning Blade.
Fusing failure	2	Is the Upper Fusing Roller dirty or scratched?	YES	Check the Fusing Thermistors. Clean or replace the Upper Fusing Roller.
Developing failure	3	Is the amount of toner on the Sleeve Roller proper?	YES	To step 7.
	4	Is the toner-to-carrier ratio relatively high?	YES	Change the toner-to-carrier ratio.
	5	Is the Db value normal?	NO	Make Db adjustment.
	6	Is the Developer Scattering Prevention Seal deformed or dirty?	YES	Clean or replace the Developer Scattering Prevention Seal.
Dirty PC Drum Paper Separator Fingers	7	Are the PC Drum Paper Separator Fingers dirty or deformed?	YES	Clean or replace the PC Drum Paper Separator Fingers.

(7) Blank Streaks or Bands

Cause	Step	Check Item	Result	Action
Plugged Db	1	Is the Db plugged with foreign matter, caked toner, etc.?	YES	Remove foreign matter. If the problem persists, replace the developer.
Drum charge failure	2	Are the PC Drum Charge Corona wire and grid mesh dirty?	YES	Clean or replace the PC Drum Charge Corona.
	3	Is the Drum Charge Corona Wire Cleaner at the home position?	NO	Check the corona wire cleaning mechanism.
Image transfer failure	4	Is the Image Transfer Corona wire dirty?	YES	Clean or replace the Image Transfer Corona.
	5	Is the Corona Wire Cleaner at the home position?	NO	Check the corona wire cleaning mechanism.
Defective PC Drum Paper Separator Fingers	6	Are the PC Drum Paper Separator Fingers dirty or deformed?	YES	Clean or replace the PC Drum Paper Separator Fingers.
Image Erase Lamp lit at abnormal timing	7	Does the Image Erase Lamp light up at abnormal timing?	YES	Check the Image Erase Lamp.
Fusing failure	8	Is the Upper Fusing Roller dirty or scratched?	YES	Clean or replace the Upper Fusing Roller.
	9	Are the Upper Paper Separator Fingers dirty or scratched?	YES	Clean or replace the Upper Paper Separator Fingers.

(8) Void Areas

Cause	Step	Check Item	Result	Action
Image transfer failure	1	Is the Image Transfer Corona installed correctly?	NO	Reinstall.
	2	Is the Image Transfer Corona wire dirty?	YES	Clean or replace the Image Transfer Corona wire.
Damp copy paper	3	Is the image improved by loading new paper?	YES	Change the copy paper and instruct the user in how to store paper and to keep the copier plugged in during the night.
Small amount of toner supplied	4	Is toner uniformly attracted onto the Sleeve Roller?	NO	Check the Db value and developer amount, and check the operation of the Bucket Roller.
PC Drum condensation	5	Is the image improved by running Drum Dehum?	YES	Run Drum Dehum and instruct the user to take further action.
Paper guide shorting	6	Is the paper guide shorted to the frame?	YES	Connect the paper guide through the resistor to the frame.
Fusing failure	7	Is the Lower Fusing Roller scratched or deformed?	YES	Replace the Lower Fusing Roller.

(9) Smear on Back

Cause	Step	Check Item	Result	Action
Dirty Developing Unit	1	Is the bottom part of the Developing Unit dirty?	YES	Clean and check the Developer Scattering Prevention Seal.
Dirty Image Transfer Corona	2	Is the Image Transfer Corona dirty?	YES	Clean the corona and check the Developing Unit.
	3	Is the Pre-Image Transfer Guide Plate dirty?	YES	Clean the guide plate and check the Developing Unit.
Dirty Suction Unit	4	Are the Suction Belts dirty?	YES	Clean the Suction Belts and check the Developing Unit.
Dirty Fusing Unit	5	Is the Fusing Unit Entrance Guide Plate dirty?	YES	Clean the guide plate and check the Developing Unit.
	6	Are the Upper and Lower Fusing Rollers dirty?	YES	Clean or replace the Upper and Lower Fusing Rollers and check the Fusing Roller cleaning mechanism.

COTNENTS

1. SPECIFICATIONS G-1
1-1. Specifications of EP2030 ..... G-1
1-2. Specifications of EP1085 ..... G-4
1-3. Specifications of EP1054 ..... G-7
2. PRECAUTIONS FOR INSTALLATION G-10
3. PRECAUTIONS FOR USE G-11
4. HANDLING OF THE CONSUMABLES G-12
5. SYSTEM OPTIONS G-13
5-1. System Options of EP2030 ..... G-13
5-2. System Options of EP1085 ..... G-14
5-3. System Options of EP1054 ..... G-14

1174SBG0100A

1 SPECIFICATIONS

1174SBG0101A

1-1. Specifications of MB 5815

TYPE	:	Desktop
PHOTOCONDUCTOR	:	Organic Photoconductor
COPYING SYSTEM	:	Electrostatic Indirect Image Transfer to Plain Paper
PAPER FEEDING SYSTEM	:	3-Way Feeding 1st Drawer: Universal Tray (250 sheets of paper) 2nd Drawer: Fixed Paper Size Tray (250 sheets of paper) Multi Bypass Table
EXPOSURE SYSTEM	:	Mirror Scanning, Slit Exposure
DEVELOPING SYSTEM	:	MB New Micro-Toning System
CHARGING SYSTEM	:	Comb Electrode DC Negative Corona with Scorotron System
IMAGE TRANSFER SYSTEM	:	Visible Image Transfer by means of a Single-Wire DC Negative Corona with Corotron System
PAPER SEPARATING SYSTEM	:	AC Corona with Corotron System, plus Paper Separator Finger
FUSING SYSTEM	:	Heat Roller
PAPER DISCHARGING SYSTEM	:	Charge Neutralizing Brush
MAXIMUM ORIGINAL SIZE	:	Metric-A3L; Inch-11" × 17"L (L: Lengthwise)

COPY MEDIUM

		1st Drawer (Automatic feeding)	2nd Drawer (Automatic feeding)	Multi Bypass Table
Medium	Plain paper (60 to 90 g/m²)	❍	❍	❍
	Translucent paper	–	–	❍
	Transparencies	–	–	❍
	Thick paper (91 to 157 g/m²)	–	–	❍
	Recycled paper	❍	❍	❍
Dimensions	Maximum (Width × Length)	297 × 432 mm	297 × 432 mm	297 × 432 mm
	Minimum (Width × Length)	140 × 182 mm	140 × 182 mm	100 × 140 mm

❍: Permissible –: Not permissible

MULTIPLE COPIES	:	1 to 99
WARMING-UP TIME	:	30 sec. or less with room temperature of 23°C and rated power voltage
FIRST COPY TIME	:	A4C or 8-1/2" × 11"C: 7.2 sec. or less (in Full size Mode using 1st Drawer)

CONTINUOUS COPY SPEED (copies/min.): Fed from 1st Drawer

Area	Zoom Ratio / Size	×1.00
Metric	A3L	13
	A4L	17
	A4C	23
	B4L	13

Area	Zoom Ratio / Size	×1.00
Inch	11" × 17" (L)	13
	8-1/2" × 11" (L)	17
	8-1/2" × 11" (C)	23
	5-1/2" × 8-1/2" (L)	21

L: Lengthwise; C: Crosswise

ZOOM RATIOS

	Area / Mode	Metric	Inch
Fixed	Full Size	× 1.000	× 1.000
	Reduction	× 0.816 × 0.707 × 0.500	× 0.785 × 0.647 × 0.500
	Enlargement	× 1.154 × 1.414 × 2.000	× 1.214 × 1.294 × 2.000
Variable	×0.500 to ×2.000 (in 0.001 increments)		

LENS	:	Through Lens (F = 8.0, f = 180 mm)
EXPOSURE LAMP	:	Halogen Frost Tube Lamp
FUSING TEMPERATURE	:	195°C

POWER/CURRENT CONSUMPTION (Copier Only)

Voltage	Exposure Lamp (Rating)	Fusing Heater Lamp (Rating)	Max. Power Consumption	In Standby
115V	80V 225W	115–120V 900W	1180W	935W
120V	80V 225W	115–120V 900W	1220W	965W
120–127V	80V 225W	115–120V 900W	1220–1290W	965–1070W
220–240V	160V 240W	220–240V 900W	1195–1270W	930–1060W

POWER REQUIREMENTS : 115 V, 120 V, 120–127 V, 220–240 V; 50/60 Hz

ENVIRONMENTAL CONDITIONS

Temperature	10 to 30°C with a fluctuation of 10°C or less per hour
Humidity	15 to 85% RH with a fluctuation of 10% RH or less per hour
Ambient Illumination	3,000 lux or less
Levelness	1° (1.75 mm/100 mm)

DIMENSIONS (Copier Only) : Width .... 650 mm (25-1/2”)
Depth .... 658 mm (26”)
Height ... 481 mm (19”)(including Original Cover)

WEIGHT : 57 kg (125-3/4 lbs)

1174SBG0102A

1-2. Specifications of EP1085

TYPE	:	Desktop (with Stationary Platen)
PHOTOCONDUCTOR	:	Organic Photoconductor
COPYING SYSTEM	:	Electrostatic Indirect Image Transfer to Plain Paper
PAPER FEEDING SYSTEM	:	2-Way Feeding Paper Drawer: Universal Tray (250 sheets of paper) Manual Bypass Table
EXPOSURE SYSTEM	:	Mirror Scanning, Slit Exposure
DEVELOPING SYSTEM	:	Minolta New Micro-Toning System
CHARGING SYSTEM	:	Comb Electrode DC Negative Corona with Scorotron System
IMAGE TRANSFER SYSTEM	:	Visible Image Transfer by means of a Single-Wire DC Negative Corona with Corotron System
PAPER SEPARATING SYSTEM	:	AC Corona with Corotron System, plus Paper Separator Finger
FUSING SYSTEM	:	Heat Roller
PAPER DISCHARGING SYSTEM	:	Charge Neutralizing Brush
MAXIMUM ORIGINAL SIZE	:	Metric-A3L; Inch-11" × 17"L (L: Lengthwise)

COPY MEDIUM

		Paper Drawer (Automatic feeding)	Manual Bypass (Single-sheet feeding)
Medium	Plain paper (60 to 90 g/m²)	❍	❍
	Translucent paper	–	❍
	Transparencies	–	❍
	Thick paper (91 to 157 g/m²)	–	❍
	Recycled paper	❍	❍
Dimensions	Maximum (Width × Length)	297 × 432 mm	297 × 432 mm
	Minimum (Width × Length)	140 × 182 mm	100 × 140 mm

❍: Permissible –: Not permissible

MULTIPLE COPIES	:	1 to 99
WARMING-UP TIME	:	30 sec. or less with room temperature of 23°C and rated power voltage
FIRST COPY TIME	:	A4C or 8-1/2" ×11"C: 7.2 sec. or less (in Full size Mode using 1st Drawer)

CONTINUOUS COPY SPEED (copies/min.): Fed from 1st Drawer

Area	Zoom Ratio / Size	×1.00
Metric	A3L	12
	A4L	16
	A4C	18
	B4L	13

Area	Zoom Ratio / Size	×1.00
Inch	11" × 17" (L)	11
	8-1/2" × 11" (L)	16
	8-1/2" × 11" (C)	18
	5-1/2" × 8-1/2" (L)	18

L: Lengthwise; C: Crosswise

ZOOM RATIOS

	Mode / Area	Metric	Inch
Fixed	Full Size	100%	100%
	Reduction	81% 70% 50%	78% 64% 50%
	Enlargement	115% 141% 200%	121% 129% 200%
Variable	50% to 200% (in 1% increments)		

LENS	:	Through Lens (F = 8.0, f = 180 mm)
EXPOSURE LAMP	:	Halogen Frost Tube Lamp
FUSING TEMPERATURE	:	195°C

POWER/CURRENT CONSUMPTION (Copier Only)

Voltage	Exposure Lamp (Rating)	Fusing Heater Lamp (Rating)	Max. Power Consumption	In Standby
115V	80V 225W	115–120V 900W	1180W	935W
120V	80V 225W	115–120V 900W	1220W	965W
120–127V	80V 225W	115–120V 900W	1220–1290W	965–1070W
220–240V	160V 240W	220–240V 900W	1195–1270W	930–1060W

POWER REQUIREMENTS : 115 V, 120 V, 120–127 V, 220–240 V; 50/60 Hz

ENVIRONMENTAL CONDITIONS

Temperature	10 to 30°C with a fluctuation of 10°C or less per hour
Humidity	15 to 85% RH with a fluctuation of 10% RH or less per hour
Ambient Illumination	3,000 lux or less
Levelness	1° (1.75 mm/100 mm)

DIMENSIONS (Copier Only) : Width .... 610 mm (24”)
Depth .... 637 mm (25”)
Height ... 401 mm (15-3/4”) (including Original Cover)

WEIGHT : 50 kg (110-1/4 lbs)

1174SBG0103A

1-3. Specifications of EP1054

✻ Except the U.S.A., Canada

TYPE	:	Desktop (with Stationary Platen)
PHOTOCONDUCTOR	:	Organic Photoconductor
COPYING SYSTEM	:	Electrostatic Indirect Image Transfer to Plain Paper
PAPER FEEDING SYSTEM	:	2-Way Feeding Paper Drawer: Universal Tray (250 sheets of paper) Manual Bypass Table
EXPOSURE SYSTEM	:	Mirror Scanning, Slit Exposure
DEVELOPING SYSTEM	:	Minolta New Micro-Toning System
CHARGING SYSTEM	:	Comb Electrode DC Negative Corona with Scorotron System
IMAGE TRANSFER SYSTEM	:	Visible Image Transfer by means of a Single-Wire DC Negative Corona with Corotron System
PAPER SEPARATING SYSTEM	:	AC Corona with Corotron System, plus Paper Separator Finger
FUSING SYSTEM	:	Heat Roller
PAPER DISCHARGING SYSTEM	:	Charge Neutralizing Brush
MAXIMUM ORIGINAL SIZE	:	Metric-A3L; Inch-11" × 17"L (L: Lengthwise)

COPY MEDIUM

		Paper Drawer (Automatic feeding)	Manual Bypass (Single-sheet feeding)
Medium	Plain paper (60 to 90 g/m²)	❍	❍
	Translucent paper	–	❍
	Transparencies	–	❍
	Thick paper (91 to 157 g/m²)	–	❍
	Recycled paper	❍	❍
Dimensions	Maximum (Width × Length)	297 × 432 mm	297 × 432 mm
	Minimum (Width × Length)	140 × 182 mm	100 × 140 mm

❍: Permissible –: Not permissible

MULTIPLE COPIES	:	1 to 99
WARMING-UP TIME	:	30 sec. or less with room temperature of 23°C and rated power voltage
FIRST COPY TIME	:	A4C or 8-1/2" ×11"C: 7.2 sec. or less (in Full size Mode using 1st Drawer)

CONTINUOUS COPY SPEED (copies/min.): Fed from 1st Drawer

Area	Zoom Ratio / Size	×1.00
Metric	A3L	12
	A4L	15
	A4C	15
	B4L	13

Area	Zoom Ratio / Size	×1.00
Inch	11" × 17" (L)	11
	8-1/2" × 11" (L)	15
	8-1/2" × 11" (C)	15
	5-1/2" × 8-1/2" (L)	15

L: Lengthwise; C: Crosswise

ZOOM RATIOS

	Mode / Area	Metric	Inch
Fixed	Full Size	100%	100%
	Reduction	81%	78%
		70%	64%
		50%	50%
	Enlargement	115%	121%
		141%	129%
		200%	200%
Variable	50% to 200% (in 1% increments)		

LENS	:	Through Lens (F = 8.0, f = 180 mm)
EXPOSURE LAMP	:	Halogen Frost Tube Lamp
FUSING TEMPERATURE	:	195°C

POWER/CURRENT CONSUMPTION (Copier Only)

Voltage	Exposure Lamp (Rating)	Fusing Heater Lamp (Rating)	Max. Power Consumption	In Standby
115V	80V 225W	115–120V 900W	1180W	935W
120V	80V 225W	115–120V 900W	1220W	965W
120–127V	80V 225W	115–120V 900W	1220–1290W	965–1070W
220–240V	160V 240W	220–240V 900W	1195–1270W	930–1060W

POWER REQUIREMENTS : 115 V, 120 V, 120–127 V, 220–240 V; 50/60 Hz

ENVIRONMENTAL CONDITIONS

Temperature	10 to 30°C with a fluctuation of 10°C or less per hour
Humidity	15 to 85% RH with a fluctuation of 10% RH or less per hour
Ambient Illumination	3,000 lux or less
Levelness	1° (1.75 mm/100 mm)

DIMENSIONS (Copier Only) : Width .... 610 mm (24”)
Depth .... 637 mm (25”)
Height ... 401 mm (15-3/4”)(including Original Cover)

WEIGHT : 50 kg (110-1/4 lbs)

1174SBG0200A

2 PRECAUTIONS FOR INSTALLATION

Installation Site

To ensure safety and utmost performance of the copier, the copier should NOT be used in a place:

- Where it will be subject to extremely high or low temperature or humidity.
- Which is exposed to direct sunlight.
- Which is in the direct air stream of an air conditioner, heater or ventilator.
- Which puts the operator in the direct stream of exhaust from the copier.
- Which has poor ventilation.
- Where ammonia gas might be generated.
- Which does not have a stable, level floor.
- Where it will be subject to sudden fluctuations in either temperature or humidity. If a cold room is quickly heated, condensation forms inside the copier, resulting in blank spots in the copy.
- Which is near any kind of heating device.
- Where it may be splashed with water.
- Which is dirty or where it will receive undue vibration.
- Which is near volatile flammables or curtains.

Power Source

Use an outlet with a capacity of 115V, 1.18KW or more, or 120V, 1.22KW or more, or 120-127V, 1.29KW or more, or 220–240V, 1.27KW or more.

- If any other electrical equipment is sourced from the same power outlet, make sure that the capacity of the outlet is not exceeded.
- Use a power source with little voltage fluctuation.
- Never connect by means of a multiple socket any other appliances or machines to the outlet being used for the copier.
- Make the following checks at frequent intervals:

✻ Is the power plug abnormally hot?
✻ Are there any cracks or scrapes in the cord?
✻ Has the power plug been inserted fully into the outlet?
✻ Does something, including the copier itself, ride on the power cord?

- Ensure that the copier does not ride on the power cord or communications cable of other electrical equipment, and that it does not become wedged into or underneath the mechanism.

Grounding

To prevent receiving electrical shocks in the case of electrical leakage, always ground the copier.

- Connect the grounding wire to:

✻ The ground terminal of the outlet.
✻ A grounding contact which complies with the local electrical standards.

- Never connect the grounding wire to a gas pipe, the grounding wire for a telephone, or a water pipe.

1174SBG0300A

3 PRECAUTIONS FOR USE

To ensure that the copier is used in an optimum condition, observe the following precautions.

- Never place a heavy object on the copier or subject the copier to shocks.
- Insert the power plug all the way into the outlet.
- Do not attempt to remove any panel or cover which is secured while the copier is making copies.
- Do not turn OFF the Power Switch while the copier is making copies.
- Provide good ventilation when making a large number of copies continuously.
- Never use flammable sprays near the copier.
- If the copier becomes inordinately hot or produces abnormal noise, turn it OFF and unplug it.
- Do not turn ON the Power Switch at the same time when you plug the power cord into the outlet.
- When unplugging the power cord, do not pull on the cord; hold the plug and pull it out.
- Do not bring any magnetized object near the copier.
- Do not place a vase or vessel containing water on the copier.
- Be sure to turn OFF the Power Switch at the end of the workday or upon power failure.
- Use care not to drop paper clips, staples, or other small pieces of metal into the copier.

Operating Environment

The operating environmental requirements of the copier are as follows.

✻ Temperature: 10°C to 30°C with a fluctuation of 10°C per hour
✻ Humidity: 15% to 85% RH with a fluctuation of 10% RH per hour

Power Requirements

The power source voltage requirements are as follows.

✻ Voltage Fluctuation:	AC115/120/127/220/240V ±10% (Copying performance assured) +6%, –10% (Only AC127V) –15% (Paper feeding performance assured)
✻ Frequency Fluctuation:	50/60 Hz ±0.3%

1174SBG0400A

4 HANDLING OF THE CONSUMABLES

Before using any consumables, always read the label on its container carefully.

- Use the right toner. The applicable copier model name is indicated on the Toner Bottle.
- Paper is apt to be easily damaged by dampness. To prevent absorption of moisture, store paper, which has been removed from its wrapper but not loaded into the Drawer, in a sealed plastic bag in a cool, dark place.
- Keep consumables out of the reach of children.
- Do not touch the PC Drum with bare hands.
- Store the paper, toner, and other consumables in a place free from direct sunlight and away from any heating apparatus.
- The same sized paper is of two kinds, short grain and long grain. Short grain paper should only be fed through the copier crosswise, long grain paper should only be fed lengthwise.
- If your hands become soiled with toner, wash them with soap and water immediately.
- Do not throw away any used consumables (PC Drum, starter, toner, etc.). They are to be collected.

NOTE

Do not burn, bury in the ground, or throw into the water any consumables (PC Drum, starter, toner, etc.).

1174SBG0500A

5 SYSTEM OPTIONS

1174SBG0501A

5-1. System Options of EP2030

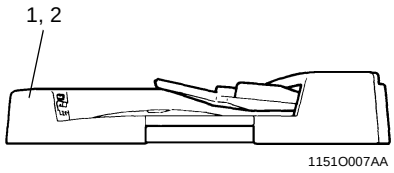

1151O007AA

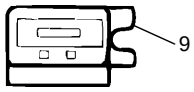

1138O525AA

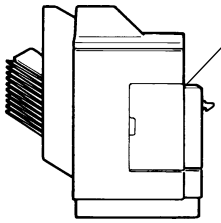

1139O0020A

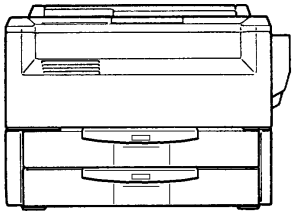
1174G001AA

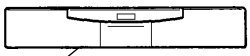
1174G002AA



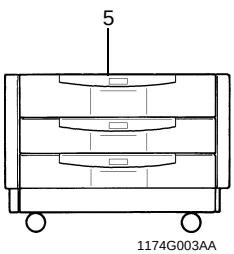

1174G003AA

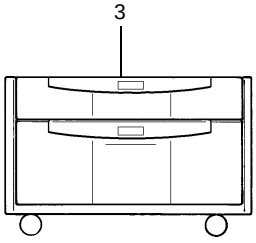

1174G004AA

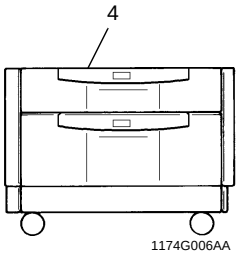

1174G006AA

1. Automatic Document Feeder AF-5
2. Duplexing Document Feeder AFR-12
3. Paper Feed Cabinet PF-112
4. Duplex Cabinet PF-6D
5. Paper Feed Cabinet PF-206
6. Duplex Unit AD-11
7. 10-Bin Sorter S-106
8. Staple Sorter ST-104
9. Data Controller D-102

1174SBG0502A
5-2. System Options of EP1085

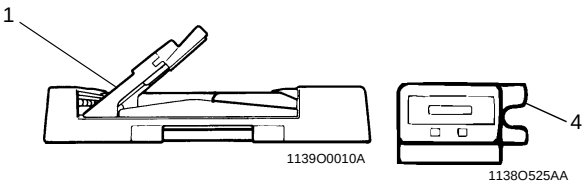

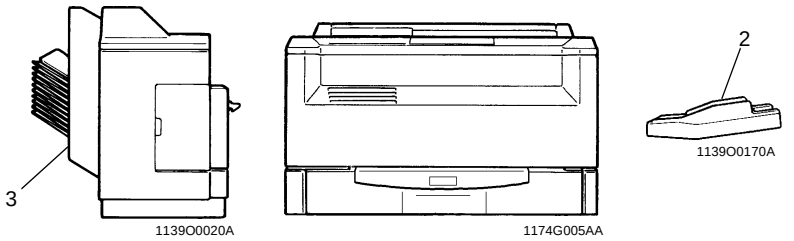

1. Automatic Document Feeder AF-5
2. Multi Bypass Table MB-4
3. 10-Bin Sorter S-106
4. Data Controller D-102

1174SBG0503A
5-3. System Options of EP1054

✻ Except the U.S.A., Canada

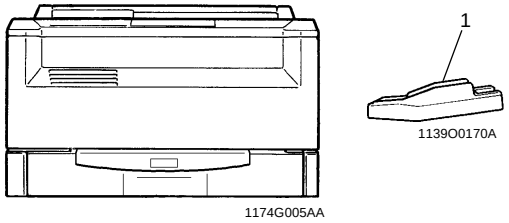

1. Multi Bypass Table MB-4

COTNENTS

1. CROSS-SECTIONAL VIEW M-1
1-1. Cross-Sectional View of 23 cpm Copier M-1
1-2. Cross-Sectional View of 18 cpm Copier M-2
1-3. Cross-Sectional View of 15 cpm Copier M-3
2. COPY PROCESS M-4
3. DRIVE SYSTEM M-6
4. SEQUENTIAL EXPLANATION M-7
5. IMAGING UNIT M-12
5-1. Imaging Unit Drive M-13
5-2. Imaging Unit Toner Recycling M-14
5-3. Imaging Unit Fuse M-14
6. PC DRUM M-15
7. DRUM CHARGING M-16
8. IMAGE ERASE LAMP M-17
9. OPTICAL SECTION M-20
9-1. Exposure Lamp M-21
9-2. AE Sensor M-22
9-3. Lamp Reflectors M-23
9-4. Aperture Plates M-23
9-5. Scanner and 2nd/3rd Mirror Carriage Movement M-24
9-6. 4th Mirror Movement M-26
9-7. Lens Movement M-27
10. ORIGINAL SIZE DETECTING SENSORS (23 cpm COPIER ONLY) M-28
10-1. Original Size Detecting Sensors M-28
10-2. Original Size Detecting Operation M-28
10-3. Sensor Locations M-29
10-4. Size Detection M-30
10-5. Original Size Detection Timing M-31
10-6. Original Cover Angle Detection (23 cpm Copier Only) M-32
11. DEVELOPMENT M-33
11-1. ATDC Sensor M-34
11-2. Magnet Roller M-36
11-3. Developing Bias M-37
11-4. Doctor Blade M-38
11-5. Sleeve/Magnet Roller Lower Filter M-38
12. TONER HOPPER M-39
12-1. Toner Hopper Locking/Unlocking M-39
12-2. Toner Replenishing M-39
12-3. Shutter M-40
12-4. Toner Hopper Home Position Detection M-40
12-5. Toner Bottle Vibration M-41
12-6. Toner Replenishing Control M-42
13. PAPER TAKE-UP/FEED SECTION (2ND DRAWER: 23 cpm COPIER ONLY) M-43
13-1.Edge Guide and Trailing Edge Stop M-44
13-2.Drawer Positioning M-45

13-3.Paper Lifting Plate M-45
13-4.Drawer-in-Position Detection M-46
13-5.Universal Tray (1st Drawer) Paper Size Detection M-47
13-6.Paper Empty Detection M-48
13-7.Paper Separating Mechanism M-49
13-8.Paper Take-Up Roll M-50
13-9.Paper Take-Up Retry Control M-51
13-10.VERTICAL PAPER TRANSPORT M-52
14. MULTI BYPASS TABLE M-53
14-1.Paper Take-Up Mechanism M-54
14-2.Paper Take-Up Retry Control M-55
14-3.Paper Separating Mechanism M-56
14-4.Paper Empty Detection M-56
15. SYNCHRONIZING ROLLERS M-57
15-1.Upper Synchronizing Roller Positioning M-58
15-2.Paper Dust Remover M-58
15-3.Synchronizing Roller Control M-59
16. IMAGE TRANSFER AND PAPER SEPARATION M-60
17. MAIN ERASE LAMP M-62
18. PAPER SEPARATOR FINGERS M-63
19. CLEANING UNIT M-64
19-1.Cleaning Bias M-65
20. PAPER TRANSPORT M-66
21. FUSING UNIT M-67
21-1. Fusing Temperature Control M-68
21-2.Fusing Rollers Pressure Mechanism M-69
21-3.Cleaning Roller M-69
22. EXIT UNIT M-70
22-1.Upper/Lower Separator Fingers M-70
22-2.Paper Exit Sensor M-71
23. EXIT/DUPLEX SWITCHING UNIT (OPTION) M-72
24. DEHUMIDIFYING SWITCH (OPTION) M-73
25. COOLING FAN M-74
26. OPTICAL SECTION COOLING FAN M-75
27. MEMORY BACKUP M-76

1174SBM0100A

1 CROSS-SECTIONAL VIEW

1174SBM0101A

1-1. Cross-Sectional View of 23 cpm Copier

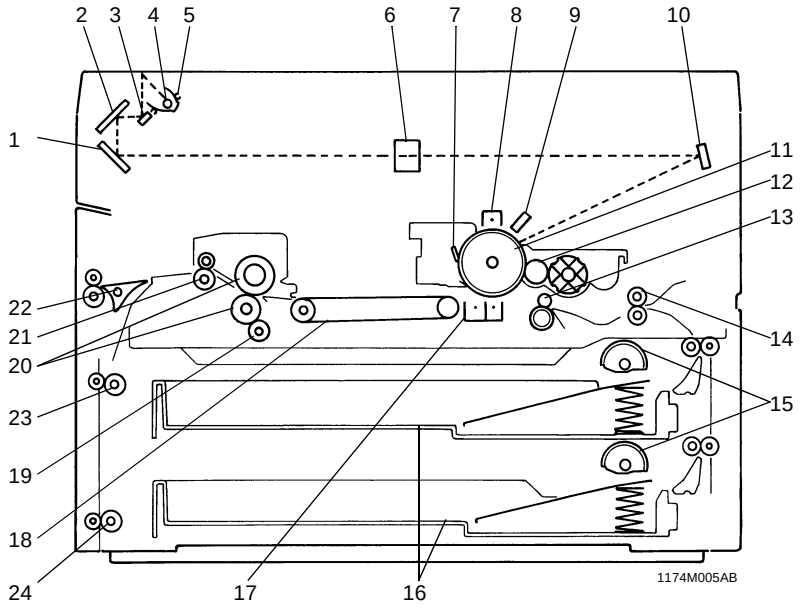

1. 3rd Mirror
2. 2nd Mirror
3. 1st Mirror
4. Exposure Lamp
5. Lamp Reflector
6. Lens
7. Cleaning Blade
8. PC Drum Charge Corona
9. Image Erase Lamp
10. 4th Mirror
11. PC Drum
12. Sleeve/Magnet Roller
13. Synchronizing Roller
14. Transport Roller
15. 1st/2nd Drawer Paper Take-Up Roll
16. 1st/2nd Drawer
17. Image Transfer/Paper Separator Coronas
18. Suction Unit
19. Cleaning Roller
20. Upper/Lower Fusing Roller
21. Paper Exit Roller
22. Exit/Duplex Switching Guide (for optional Duplex Unit and Sorter)
23. Duplex Unit Vertical Transport Roller 1 (for optional Duplex Unit)
24. Duplex Unit Vertical Transport Roller 2 (for optional Duplex Unit)

1174SBM0102A

1-2. Cross-Sectional View of 18 cpm Copier

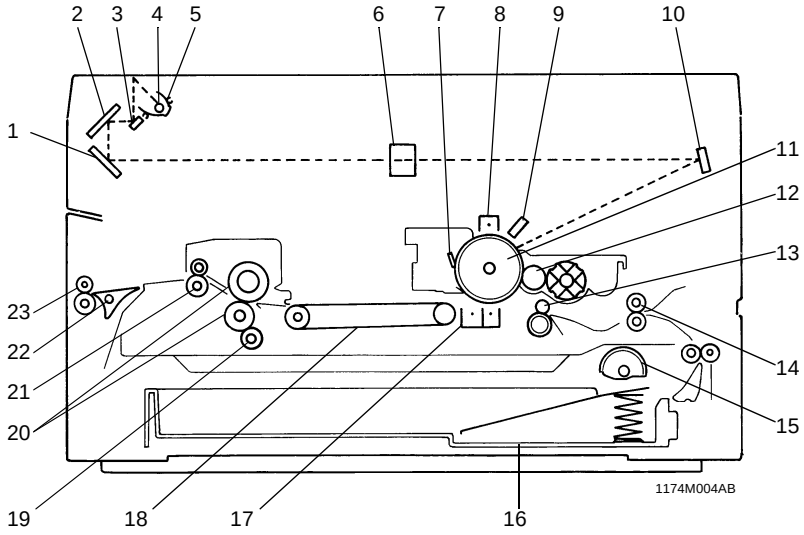

1. 3rd Mirror
2. 2nd Mirror
3. 1st Mirror
4. Exposure Lamp
5. Lamp Reflector
6. Lens
7. Cleaning Blade
8. PC Drum Charge Corona
9. Image Erase Lamp
10. 4th Mirror
11. PC Drum
12. Sleeve/Magnet Roller
13. Synchronizing Roller
14. Transport Roller
15. Paper Take-Up Roll
16. Drawe
17. Image Transfer/Paper Separator Coronas
18. Suction Unit
19. Cleaning Roller
20. Upper/Lower Fusing Roller
21. Paper Exit Roller
22. Exit/Duplex Switching Guide (for optional Sorter)
23. Paper Exit Roller in Exit/Duplex Switching Guide Unit (for optional Sorter)

1174SBM0103A

1-3. Cross-Sectional View of 15 cpm Copier

✻ Except U.S.A., Canada

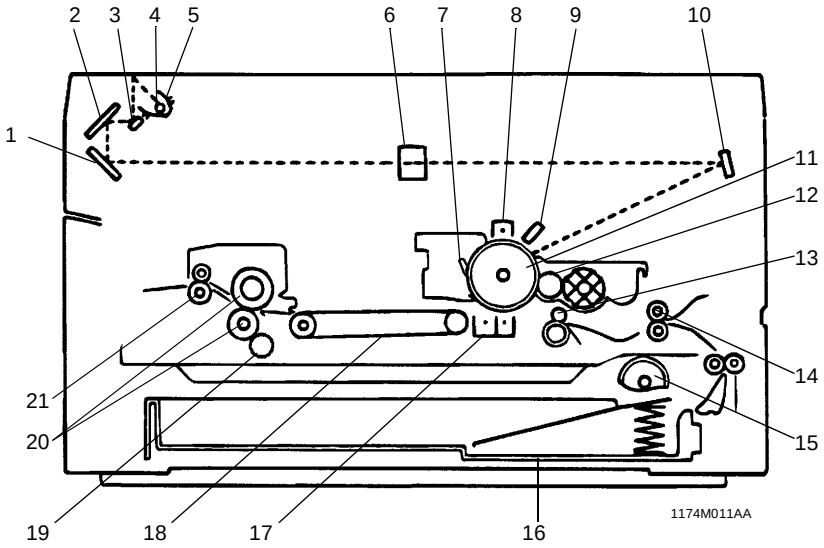

1. 3rd Mirror
2. 2nd Mirror
3. 1st Mirror
4. Exposure Lamp
5. Lamp Reflector
6. Lens
7. Cleaning Blade
8. PC Drum Charge Corona
9. Image Erase Lamp
10. 4th Mirror
11. PC Drum
12. Sleeve/Magnet Roller
13. Synchronizing Roller
14. Transport Roller
15. Paper Take-Up Roll
16. Drawer
17. Image Transfer/Paper Separator Coronas
18. Suction Unit
19. Cleaning Roller
20. Upper/Lower Fusing Roller
21. Paper Exit Roller

1174SBM0200A

2 COPY PROCESS

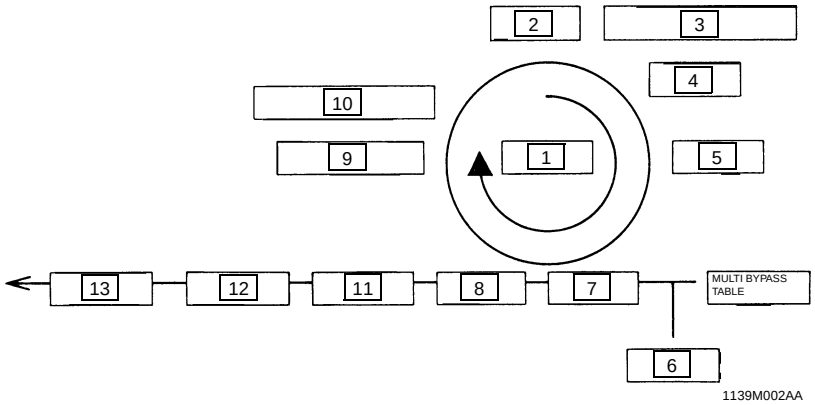

1139M002AA

1. PC DRUM
2. DRUM CHARGING
3. IMAGE ERASE
4. EXPOSURE
5. DEVELOPING
6. PAPER FEEDING
7. IMAGE TRANSFER
8. PAPER SEPARATION
9. CLEANING
10. MAIN ERASE
11. TRANSPORT
12. FUSING
13. PAPER EXIT

1. PC Drum The PC Drum is an aluminum cylinder coated with a photosensitive semiconductor. It is used as the medium on which a visible developed image of the original is formed. (For more details, see “6. PC DRUM”.)
2. Drum Charging The PC Drum Charge Corona Unit is equipped with a Comb Electrode and a Scorotron Grid to deposit a uniform negative charge across the entire surface of the PC Drum. (For more details, see “7. DRUM CHARGING”.)
3. Image Erase Any areas of charge which are not to be developed are neutralized by lighting up LEDs. (For more details, see “8. IMAGE ERASE LAMP”.)
4. Exposure Light from the Exposure Lamp reflected off the original is guided to the surface of the PC Drum and reduces the level of the negative charges, thereby forming an electrostatic latent image. (For more details, see “9. OPTICAL SECTION”.)
5. Developing Toner positively charged in the Developer Mixing Chamber is attracted onto the electrostatic latent image changing it to a visible, developed image. A DC negative bias voltage is applied to the Sleeve/Magnet Roller to prevent toner from being attracted onto those areas of the PC Drum which correspond to the background areas of the original. (For more details, see “11. DEVELOPMENT”.)

6. Paper Feeding Paper is fed either automatically from the 1st or 2nd Drawer, or manually via the Multi Bypass Table or Manual Bypass Table. Each Drawer has fingers that function to separate the top sheet of paper from the rest at take-up. (2nd Drawer: 23 cpm Copier Only) (For more details, see “13. PAPER TAKE-UP/FEED SECTION”.)
7. Image Transfer The single-wire Image Transfer Corona Unit applies a DC negative corona emission to the underside of the paper, thereby attracting toner onto the surface of the paper. (For more details, see “16. IMAGE TRANSFER AND PAPER SEPARATION”.)
8. Paper Separation The single-wire Paper Separator Corona Unit applies an AC corona emission to the underside of the paper to neutralize the paper. In addition, mechanical paper separation is provided by the two PC Drum Paper Separator Fingers fitted to the Imaging Unit. (For more details, see “16. IMAGE TRANSFER AND PAPER SEPARATION”.)
9. Cleaning Residual toner on the surface of the PC Drum is scraped off by the Cleaning Blade. (For more details, see “19. CLEANING UNIT”.)
10. Main Erase Light from the Main Erase Lamp neutralizes any surface potential remaining on the surface of the PC Drum after cleaning. (For more details, see “17. MAIN ERASE LAMP”.)
11. Transport The paper is fed to the Fusing Unit by the Suction Belts. (For more details, see “20. PAPER TRANSPORT”.)
12. Fusing The developed image is permanently fused to the paper by a combination of heat and pressure applied by the Upper and Lower Fusing Rollers. (For more details, see “21. FUSING UNIT”.)
13. Paper Exit After the fusing process the paper is fed out by the Paper Exit Roller onto the Copy Tray. (For more details, see “22. EXIT UNIT”.)

1174SBM0300A

3 DRIVE SYSTEM

This copier is equipped with two main drive motors, the PC Drive Motor that drives the upper half of the copier (Imaging Unit) and the Main Drive Motor which gives drive for the lower half of the copier (paper take-up/feeding, transport mechanism and Fusing Unit). Each has its own drive transmitting gears and timing belts as illustrated below.

Drive Train for Lower Half of Copier

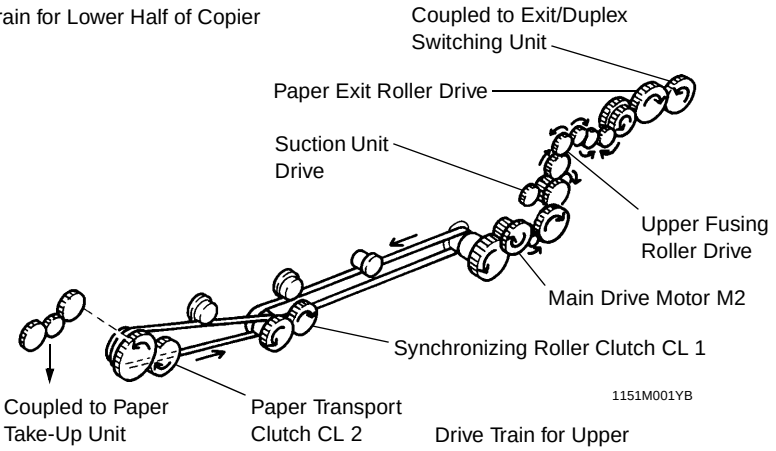

Drive Train for Upper Half of Copier

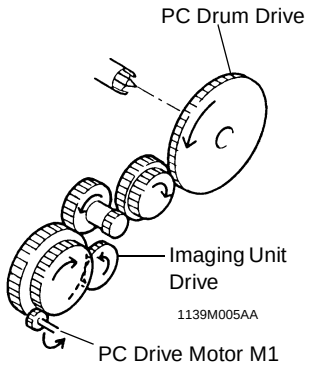

Drive Train for Paper Take-Up Unit <23 cpm Copier>

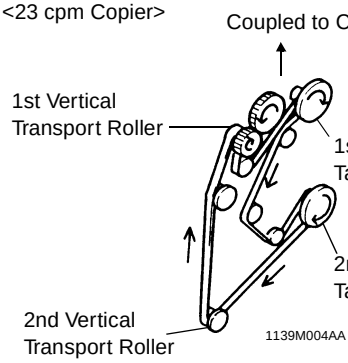

<15/18 cpm Copier>

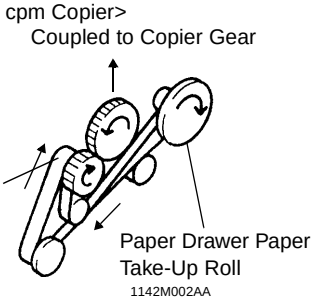

1174SBM0400A

4 SEQUENTIAL EXPLANATION

✻ Numbers given in rectangles ☐ in the following flowchart are timer values in seconds.

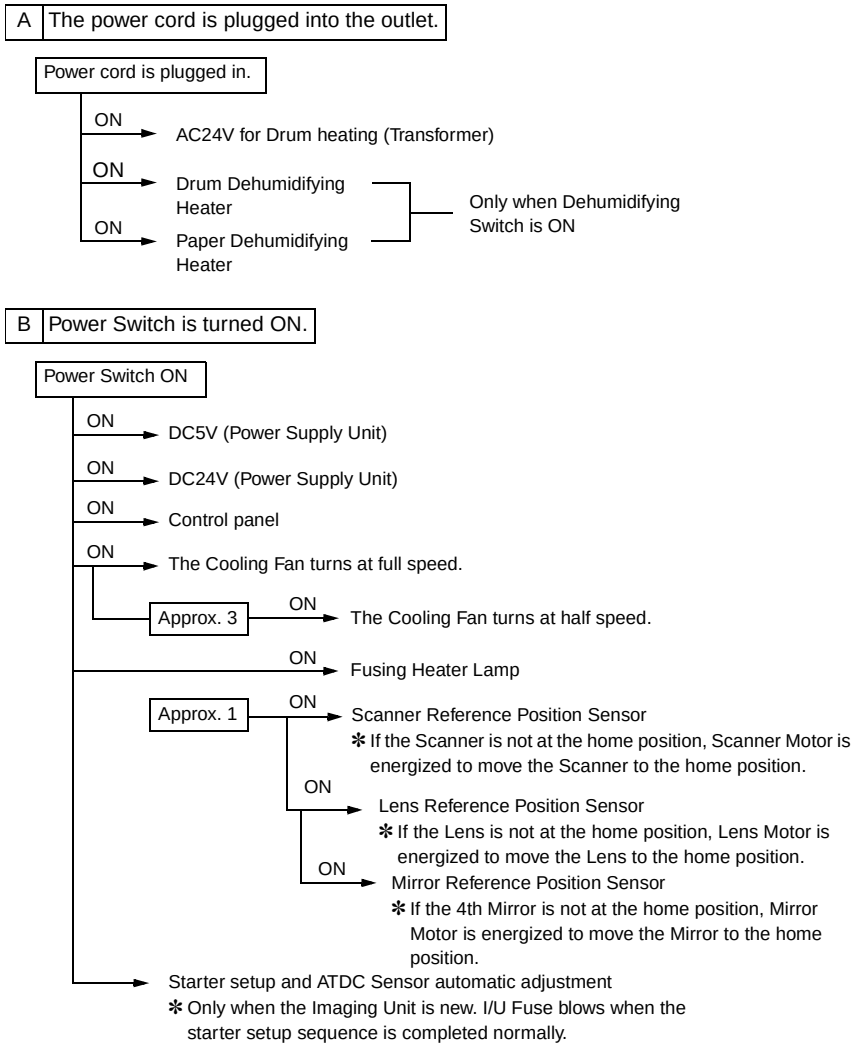

C	The Fusing Unit temperature reaches 205°C.

Fusing Thermistor detects 205°C.

ON/OFF → Fusing Heater Lamp

✻ The Fusing Unit temperature control is started.

D The Start Key is pressed.

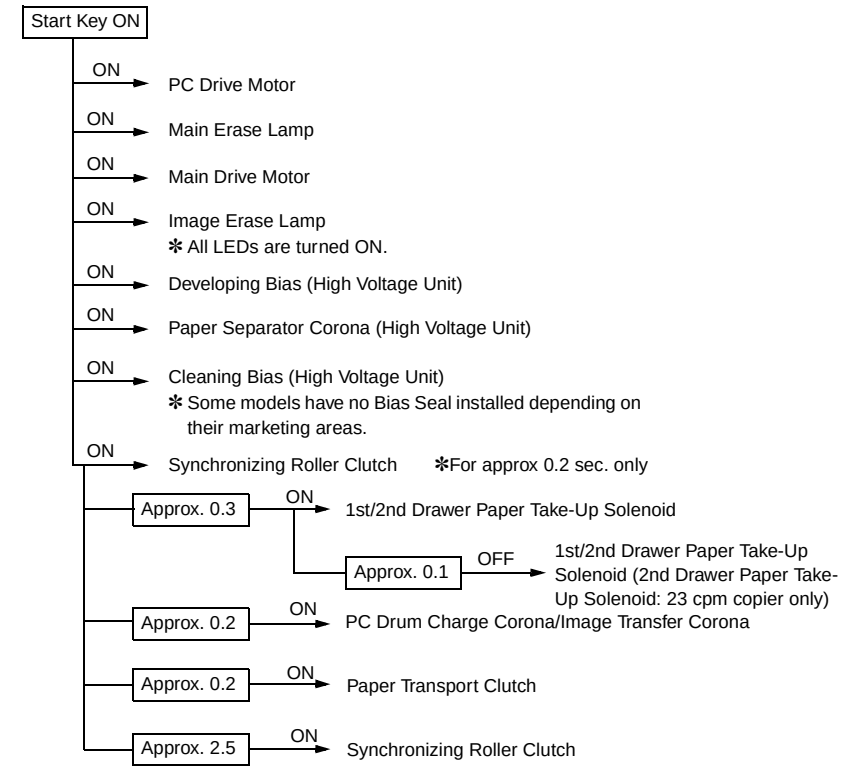

E Paper is taken up.

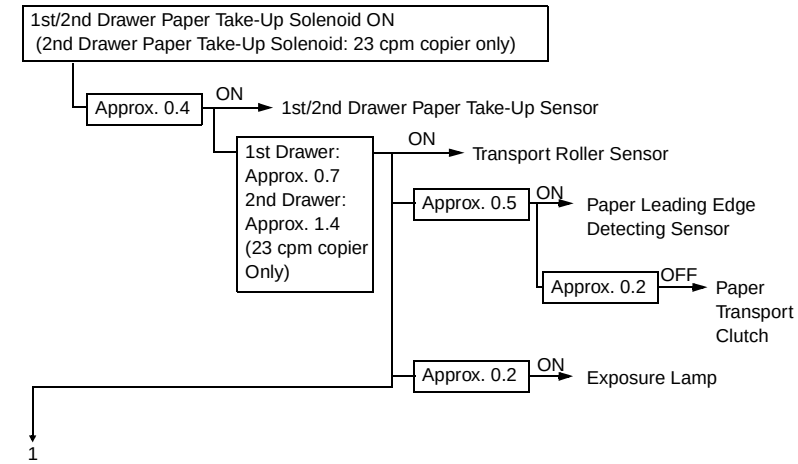

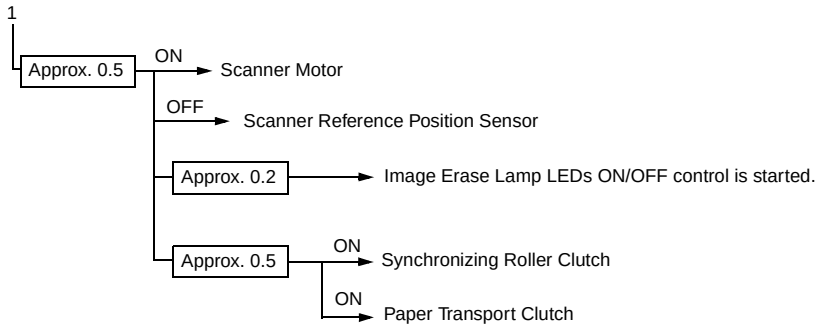
1
Approx. 0.5
ON
Scanner Motor
OFF
Scanner Reference Position Sensor
Approx. 0.2
Image Erase Lamp LEDs ON/OFF control is started.
Approx. 0.5
ON
Synchronizing Roller Clutch
ON
Paper Transport Clutch

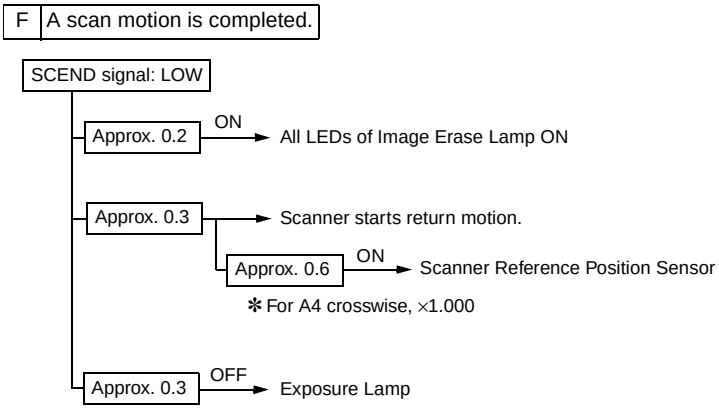
F
A scan motion is completed.
SCEND signal: LOW
Approx. 0.2
ON
All LEDs of Image Erase Lamp ON
Approx. 0.3
Scanner starts return motion.
Approx. 0.6
ON
Scanner Reference Position Sensor
✻For A4 crosswise, ×1.000
Approx. 0.3
OFF
Exposure Lamp

G The last paper moves past Transport Roller Sensor.

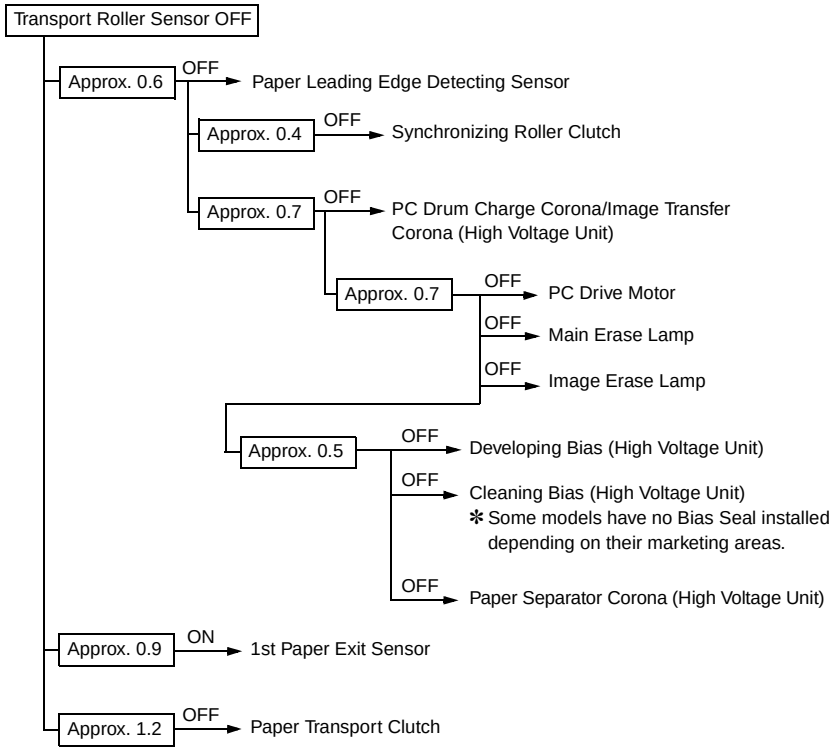

H The paper moves past 1st Paper Exit Sensor.

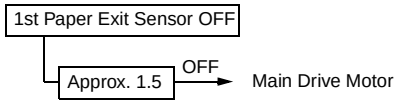

1174SBM0500A

5 IMAGING UNIT

This copier is equipped with an Imaging Unit, or IU, which integrates a PC Drum, PC Drum Charge Corona, Developing Unit, Cleaning Unit, and Toner Recycling mechanism into one assembly. The Unit also includes the Upper Synchronizing Roller which facilitates clearing of a paper misfeed.

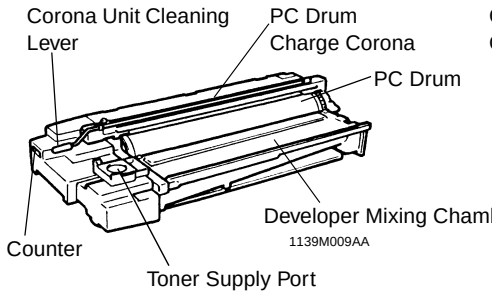

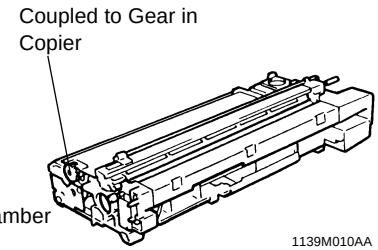

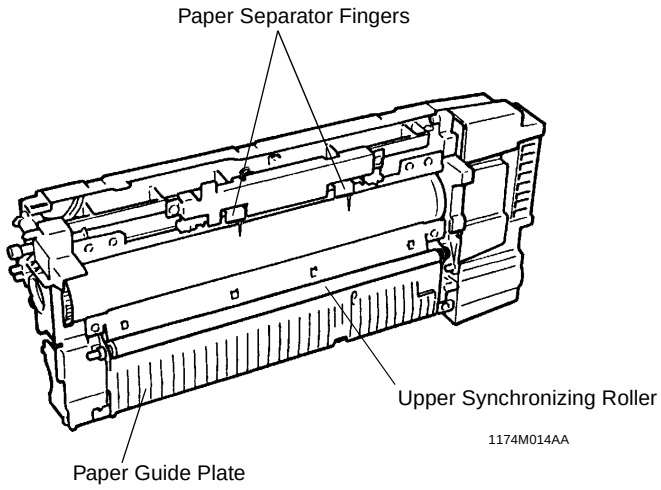

1174SBM0501A

5-1. Imaging Unit Drive

Drive for the Imaging Unit is transmitted by one of the gears on the Unit.
This particular gear is in mesh with the Imaging Unit Drive Gear in the copier.

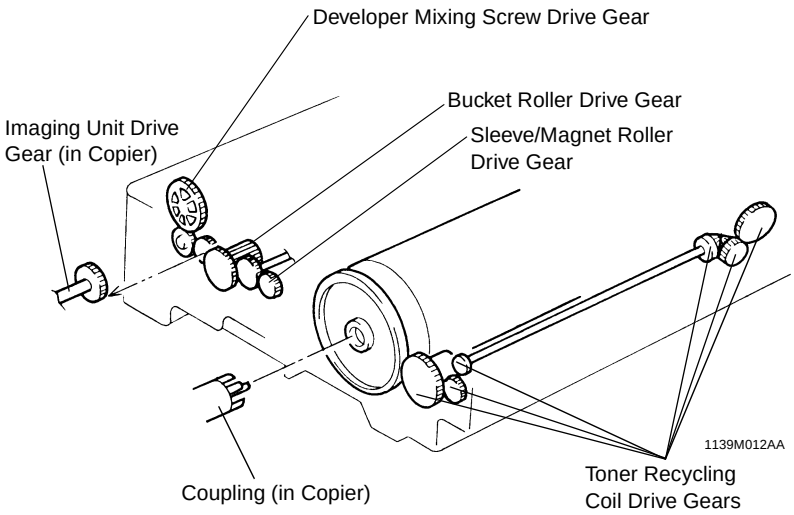

1174SBM0502A

5-2. Imaging Unit Toner Recycling

The copier is provided with a toner recycling mechanism. The toner, which has been scraped off the surface of the PC Drum by the Cleaning Blade and collected in the Cleaning Unit, is conveyed by the two Toner Recycling Coils to the Toner Supply Port and, from there, it is returned back to the Developer Mixing Chamber of the Developing Unit.

One of the gears of the Toner Recycling mechanism receives drive through a gear at the rear end of the PC Drum.

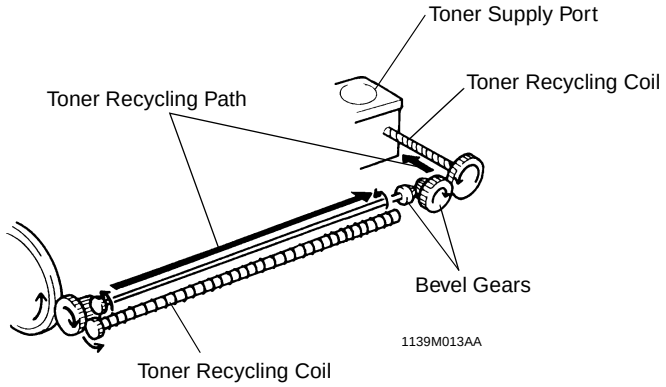

1174SBM0503A

5-3. Imaging Unit Fuse

The Imaging Unit is provided with a fuse called the I/U Fuse. When a new Imaging Unit is installed in the copier and the Power Switch turned ON, an I/U Set signal is output causing the copier to start the starter setup sequence and ATDC Sensor automatic adjustment.

When the starter setup sequence is completed normally, an I/U Fuse Blow signal is output to blow the I/U Fuse. Once the I/U Fuse is blown, the I/U Set signals are no longer output. This means that the starter setup sequence and ATDC Sensor automatic adjustment will not be carried out when the Power Switch is thereafter turned ON.

	Control Signal	When Fuse is not Blown	When Fuse is Blown	WIRING DIAGRAM
Fuse	PWB-A PJ10A-6	H	L	2-I

1174SBM0600A

6 PC DRUM

The photoconductive drum used in this copier is the organic photoconductor (OPC) type. The drum is made up of two distinct, semiconductive materials on an aluminum alloy base. The outer of the two layers is called the Charge Transport Layer (CTL), while the inner layer is called the Charge Generating Layer (CGL).

The PC Drum has its grounding point inside at its rear end. When the Imaging Unit is installed in the copier, the shaft on which the PC Drum Drive Coupling Gear is mounted contacts this grounding point.

Handling Precautions
This photoconductor exhibits greatest light fatigue after being exposed to light over an extended period of time. It must therefore be protected from light by a clean, soft cloth whenever the Imaging Unit has been removed from the copier. Further, use utmost care when handling the PC Drum to prevent it from being contaminated.

PC Drum Cross-Sectional View

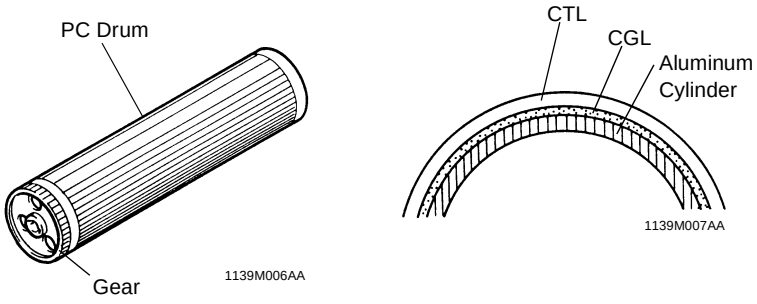

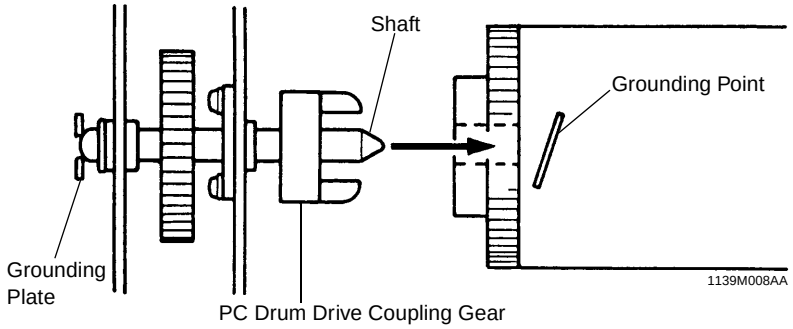

1174SBM0700A

7 DRUM CHARGING

The PC Drum Charge Corona has a Scorotron grid to deposit a negative DC charge evenly across the surface of the PC Drum. The grid voltage (VG) applied to the grid mesh is selected between -650V in the normal mode and -520V in the Photo mode by the Constant-Voltage Circuit in the High Voltage Unit.

The Corona Unit has a Comb Electrode which minimizes the amount of ozone produced. The conventional wire type corona unit produces a large amount of ozone due to corona discharge in radial directions. The comb electrode type, on the other hand, discharges only toward the Grid Mesh, meaning a reduced amount of ozone is produced.

The Comb Electrode can be cleaned by the user who pulls out to the front the shaft on which a Cleaning Roller is mounted.

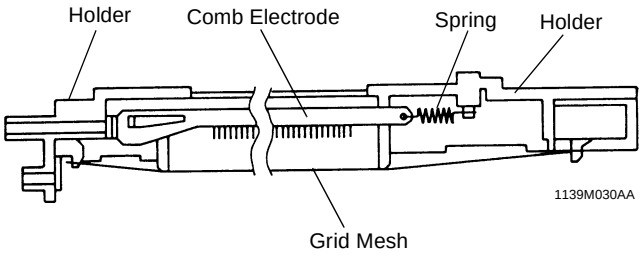

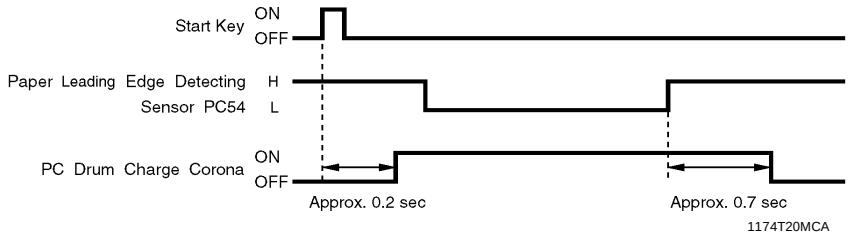

	Control Signal	ON	OFF	WIRING DIAGRAM
PC Drum Charge Corona	PWB-A PJ11A-9A	L	H	4-C

	Control Signal	Normal Mode	Photo Mode	WIRING DIAGRAM
Grid Voltage (VG)	PWB-A PJ11A-10A	L	H	4-C

1174SBM0800A

8 IMAGE ERASE LAMP

To prevent a black band from occurring across both the leading and trailing edges, and along the front and rear edges, of the electrostatic latent image, 31 LEDs of the Image Erase Lamp are turned ON before development takes place, thereby reducing to a minimum the unnecessary potential on the surface of the PC Drum. Because of the light path involved, this copier has the edge erasing cycle between drum charging and exposure.

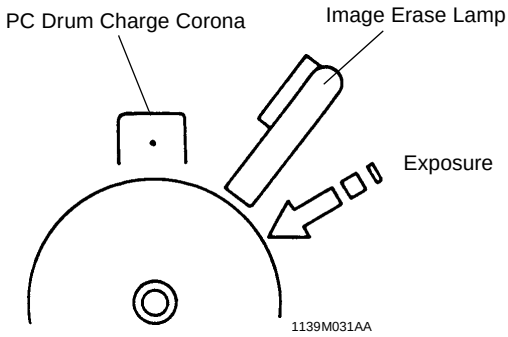

The position of the Image Erase Lamp can be adjusted using the adjusting screw on the front of the copier.

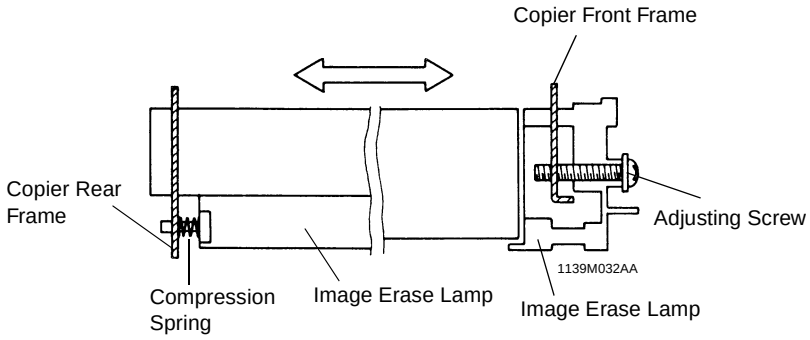

The 31 LEDs of the Image Erase Lamp are grouped as shown below. The table at the bottom of this page shows which LEDs turn ON and OFF for different paper sizes and different zoom ratios.

LED Group No.	LED No.	LED Group No.	LED No.
00	LED 1	10	LED 23
01	LED 2 to 6	11	LED 24
02	LED 7 to 11	12	LED 25
03	LED 12 to 16	13	LED 26
04	LED 17	14	LED 27
05	LED 18	15	LED 28
06	LED 19	16	LED 29
07	LED 20	17	LED 30
08	LED 21	18	LED 31
09	LED 22		

✻ The smaller the number, the nearer the LED is to the front side of the copier.

LED ON/OFF Pattern

Zoom Ratio	Paper Width	LED Group No.																		
From - To Less Than (%)	From - To Less Than (mm)	00	01	02	03	04	05	06	07	08	09	10	11	12	13	14	15	16	17	18
50~53	to 152	❍	–	–	–	❍	❍	❍	❍	❍	❍	❍	❍	❍	❍	❍	❍	❍	❍	❍
53~57	152 to 163	❍	–	–	–	–	❍	❍	❍	❍	❍	❍	❍	❍	❍	❍	❍	❍	❍	❍
57~61	163 to 173	❍	–	–	–	–	–	❍	❍	❍	❍	❍	❍	❍	❍	❍	❍	❍	❍	❍
61~64	173 to 183	❍	–	–	–	–	–	–	❍	❍	❍	❍	❍	❍	❍	❍	❍	❍	❍	❍
64~67	183 to 192	❍	–	–	–	–	–	–	–	❍	❍	❍	❍	❍	❍	❍	❍	❍	❍	❍
67~70	192 to 201	❍	–	–	–	–	–	–	–	–	❍	❍	❍	❍	❍	❍	❍	❍	❍	❍
70~74	201 to 212	❍	–	–	–	–	–	–	–	–	–	❍	❍	❍	❍	❍	❍	❍	❍	❍
74~78	212 to 223	❍	–	–	–	–	–	–	–	–	–	–	❍	❍	❍	❍	❍	❍	❍	❍
78~82	223 to 235	❍	–	–	–	–	–	–	–	–	–	–	–	❍	❍	❍	❍	❍	❍	❍
82~86	235 to 247	❍	–	–	–	–	–	–	–	–	–	–	–	–	❍	❍	❍	❍	❍	❍
86~90	247 to 259	❍	–	–	–	–	–	–	–	–	–	–	–	–	–	❍	❍	❍	❍	❍
90~93	259 to 270	❍	–	–	–	–	–	–	–	–	–	–	–	–	–	–	❍	❍	❍	❍
93~96	270 to 281	❍	–	–	–	–	–	–	–	–	–	–	–	–	–	–	–	❍	❍	❍
96~99	281 to 291	❍	–	–	–	–	–	–	–	–	–	–	–	–	–	–	–	–	❍	❍
99~	291 to	❍	–	–	–	–	–	–	–	–	–	–	–	–	–	–	–	–	–	❍

❍: ON; –: OFF

✻ Max. width (291 mm or more) applies to manual bypass copying in which the copier is unable to detect paper width.

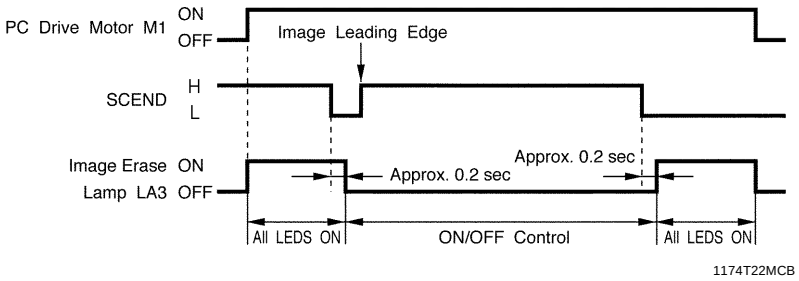

	Control Signal	ON	OFF	WIRING DIAGRAM
LA3	PWB-A PJ16A-4A ~ 9A	L	H	1-G

1174SBM0900A

9 OPTICAL SECTION

As the Scanner is moved by the Scanner Motor, the light from the Exposure Lamp is reflected off the original and guided through the four Mirrors onto the surface of the PC Drum to form the electrostatic latent image.

The image is enlarged or reduced as necessary by changing the position of the Lens and 4th Mirror and varying the angle of the 4th Mirror.

- 23 cpm Copier

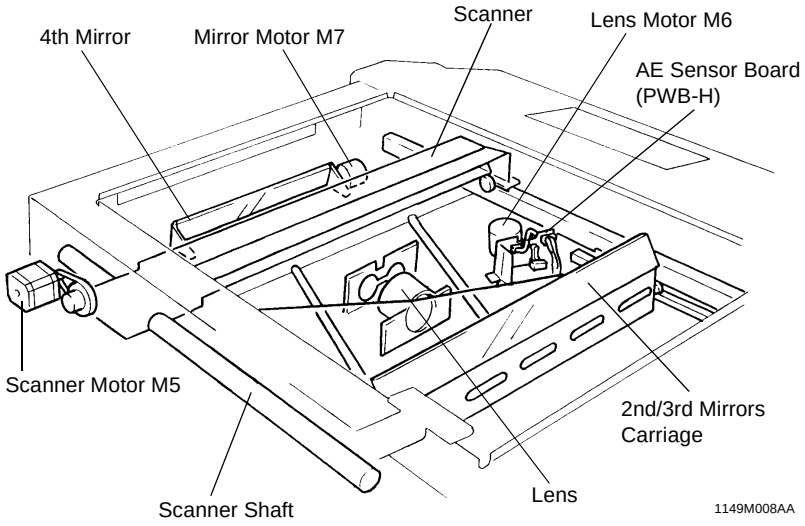

- 15/18 cpm Copier

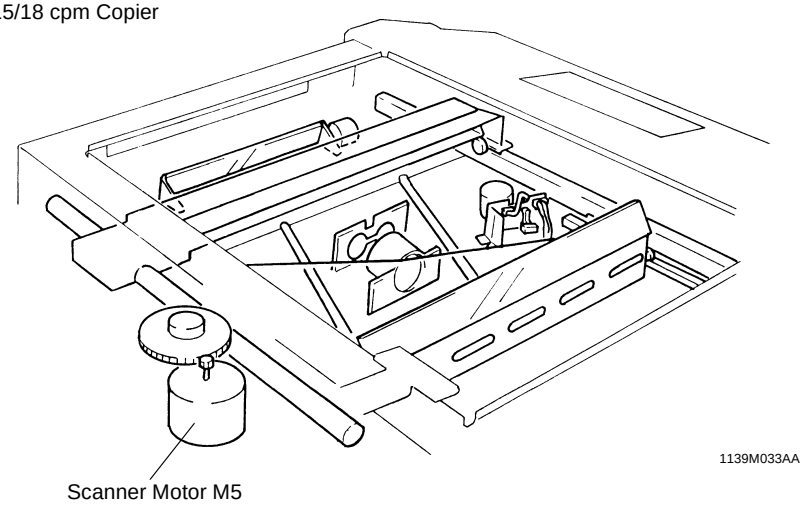

1174SBM0901A

9-1. Exposure Lamp

An AC halogen lamp is used as the Exposure Lamp.

As the exposure level is adjusted on the control panel, the duty ratio of the pulse of AVR Remote from the Master Board changes to increase or decrease the Exposure Lamp voltage, thereby changing the image density.

In Photo mode, the voltages are varied on a level 5V lower than the manual Exposure Lamp voltages.

Manual EXP Setting	9	8	7	6	5	4	3	2	✻ 1
Lamp Voltage Difference (V)	–8	–4	–2	–1	Reference	+1	+2	+4	+4

✻ At Manual Exposure Setting 1 only VG is reduced, thereby giving a lamp Voltage difference equivalent to +8V.

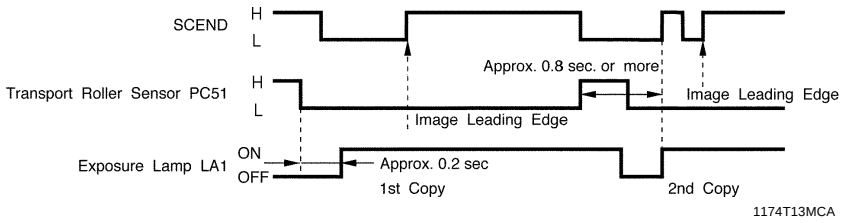

	Control Signal	ON	OFF	WIRING DIAGRAM
AVR Remote Signal (LA1)	PWB-A PJ14A-3	L	H	6-D

✻ If reduction copies are made using large size paper, the trailing edge of the first copy moves past the Transport Roller Sensor after the SCEND signal for the second copy has been generated. If the Exposure Lamp is turned ON for the second copy at the same timing as the first one, therefore, the image for the second copy is produced on the trailing edge of the first copy. To prevent this from occurring, the Exposure Lamp is turned ON for the second and subsequent copies when all of the following conditions are met:

- Approx. 0.8 sec. or more have elapsed after the first copy deactivated the Transport Roller Sensor.
- The Transport Roller Sensor output is HIGH.
- The SCEND signal for the second copy is output.

1174SBM0902A

9-2. AE Sensor

In the Auto Exposure Mode, the AE Sensor on the AE Sensor Board measures the intensity of the light reflected off the original, which results in the black/white ratio of a 210-mm-wide area from the reference position of the original being measured. According to this measurement, the Exposure Lamp voltage is automatically increased or decreased so that copies of consistent quality are produced.

The output from the AE Sensor is applied to the Master Board which, in turn, varies the duty ratio of the AVR Remote from it to vary accordingly the Exposure Lamp voltage.

Original Density (B/W Ratio)	High	Low
Intensity of Reflected Light	Low	High
AE Sensor Board Output	High	Low
AVR Duty	Increased	Decreased
Exposure Lamp Voltage	Increased	Decreased

	Control Signal	ON	OFF	WIRING DIAGRAM
PWB-H (AE Sensor)	PWB-A PJ9A-3	L	H	4-F
AVR Remote Signal (LA1)	PWB-A PJ14A-3	L	H	6-D

1174SBM0903A

9-3. Lamp Reflectors

The Main Reflector ensures that light from the Exposure Lamp exposes all areas of the original. The Auxiliary Reflector reflects light onto the areas that the Exposure Lamp cannot illuminate when an original that does not lie flat on the Original Glass (such as a book) is being used. This reduces shadows which would otherwise be transferred to the copy.

The Main Reflector is of aluminum, while the Auxiliary Reflector is aluminum to which film has been deposited. The same film as that used on the Auxiliary Reflector is affixed to both ends of the frame to compensate for the reduced intensity of light around both ends of the Exposure Lamp.

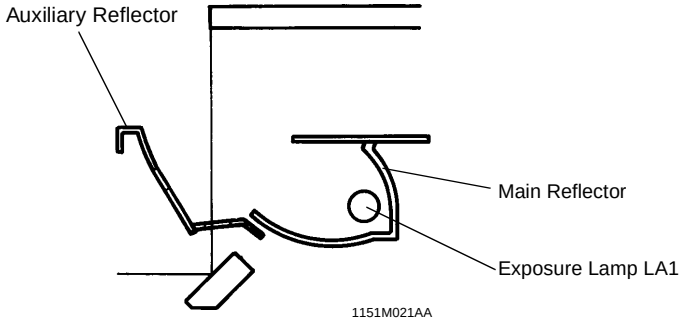

1174SBM0904A

9-4. Aperture Plates

Four Aperture Plates are moved to the right or left to ensure even light distribution.

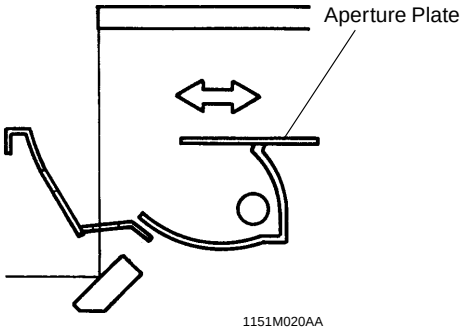

1174SBM0905A

9-5. Scanner and 2nd/3rd Mirror Carriage Movement

The Scanner and 2nd/3rd Mirrors Carriage are moved by the Scanner Drive Cable fitted in the rear side of the copier. The Cable is driven by the Scanner Motor.

Both the Scanner and 2nd/3rd Mirrors Carriage slide along the Scanner Shaft at the rear side. At the front side, there is a Slide Bushing attached to the underside of each of the bodies and that Bushing slides over the Slide Rail. The speed of the Scanner and 2nd/3rd Mirrors Carriage varies with different zoom ratios.

The Scanner Reference Position Sensor detects the home position of the Scanner and 2nd/3rd Mirrors Carriage. If they are not at the home position when the copier is turned ON, the Scanner Motor is energized to move them to the home position.

- 23 cpm Copier

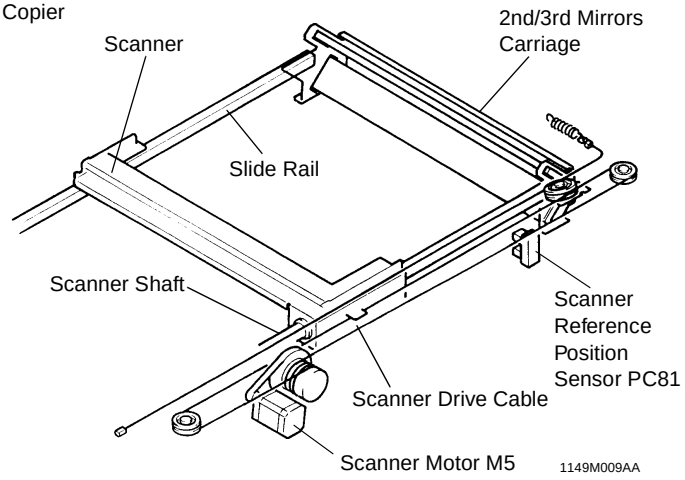

1149M009AA

- 15/18 cpm Copier

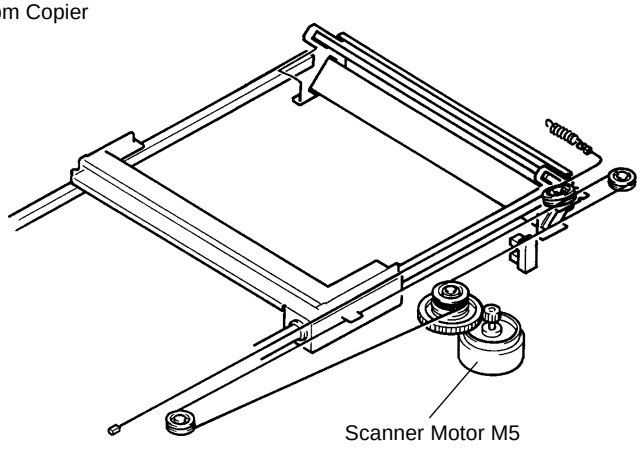

1151M022YA

The Scanner starts the scan motion as a Scan signal is output from the Master Board. At the start of a scan motion and other heavy load conditions, the Scanner Motor requires a large amount of current. The Current 1 or 2 signal from the Motor Drive Board is selected accordingly to vary the amount of current supplied to the Scanner Motor.

✻ The Current signal selection timing is controlled by software.

Current 1	H	H	L
Current 2	H	L	H
Operation	When the scan speed reaches a given level.	At scan start and during scan deceleration.	At return start and during return motion.

On receiving the Scan signal, the Motor Drive Board applies motor drive pulses, which are out-of-phase with each other, to the Scanner Motor. The motor speed is varied by changing the width of the pulses applied to the Scanner Motor.

	Control Signal	Energized	Deenergized	WIRING DIAGRAM
M5 Scan Signal	PWB-F (23 cpm Copier) PWB-E (15/18 cpm Copier)	L	H	8-D/8-H
M5 Current Switching Signal 1	PWB-F (23 cpm Copier) PWB-E (15/18 cpm Copier)	L	H	
M5 Current Switching Signal 2	PWB-F (23 cpm Copier) PWB-E (15/18 cpm Copier)	L	H	

	Control Signal	Blocked	Unblocked	WIRING DIAGRAM
PC81	PWB-A PJ17A-7B	L	H	11-A

1174SBM0906A

9-6. 4th Mirror Movement

The 4th Mirror is moved to vary the conjugate distance for a particular zoom ratio by driving the rack-and-pinion gears at the front and rear ends of the mirror using the Mirror Motor (stepping motor). The Levers of the Holder to which the Mirror is mounted slide along a tilted rail to change the Mirror angle. This ensures that the light strikes the surface of the PC Drum in the direction of the normal, thereby preventing resolution from being degraded.

The Mirror Reference Position Sensor is used to control the position of the 4th Mirror. It ensures that the Mirror is located at the home position when the copier is turned ON.

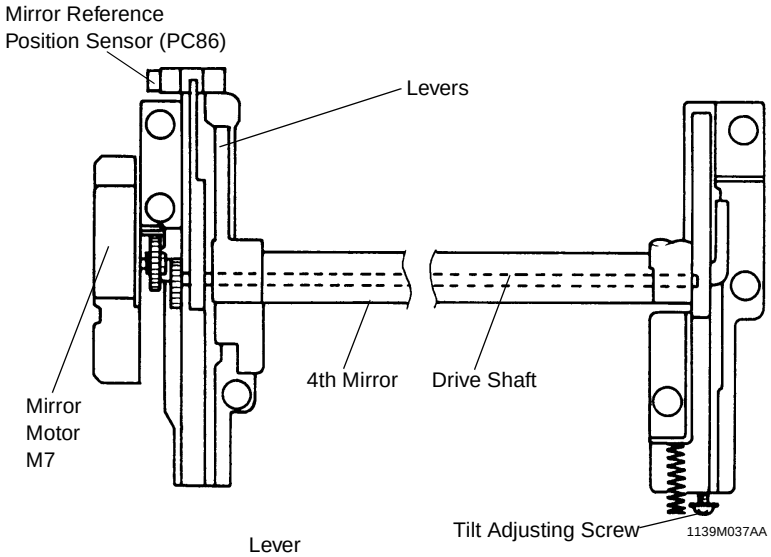

	Control Signal	Energized	Deenergized	WIRING DIAGRAM
M7	PWB-A PJ16A-2B	L	H	8-B/8-F

	Control Signal	Blocked	Unblocked	WIRING DIAGRAM
PC86	PWB-A PJ22A-5	L	H	12-A

1174SBM0907A

9-7. Lens Movement

The Lens is moved by the Lens Drive Cable which is driven by the Lens Motor (stepping motor). The motor drive pulses sent from the Motor Drive Board drive the Lens Motor to move the Lens a given distance, corresponding to the zoom ratio, from the reference position determined by the Lens Reference Position Sensor.

There is a fixed-type Lens Aperture Cover provided at the rear of the Lens (on the 4th Mirror end). It limits the amount of light striking the surface of the PC Drum.

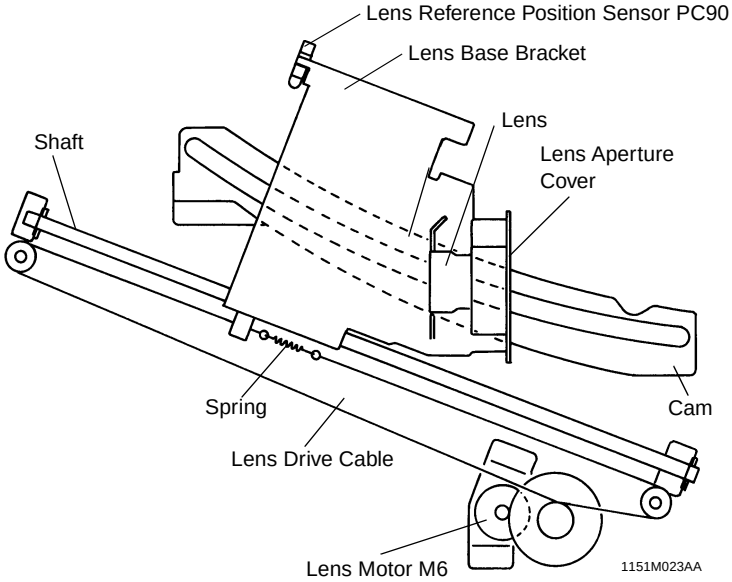

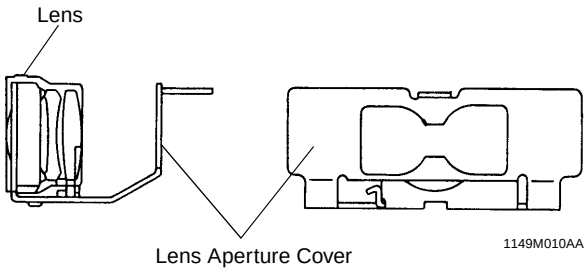

	Control Signal	Energized	Deenergized	WIRING DIAGRAM
M6	PWB-A PJ16A-1B	L	H	8-B/8-F

	Control Signal	Blocked	Unblocked	WIRING DIAGRAM
PC90	PWB-A PJ22A-8	L	H	12-B

1174SBM1000A

10 ORIGINAL SIZE DETECTING SENSORS (23 cpm COPIER ONLY)

The four sensors fixed in the optical section receive the light reflected off the original to determine the size of the original in the Auto Paper and Auto Size mode. (The image density of the original, or OD, that can be detected is 0.6 or less.)

1174SBM1001A

10-1. Original Size Detecting Sensors

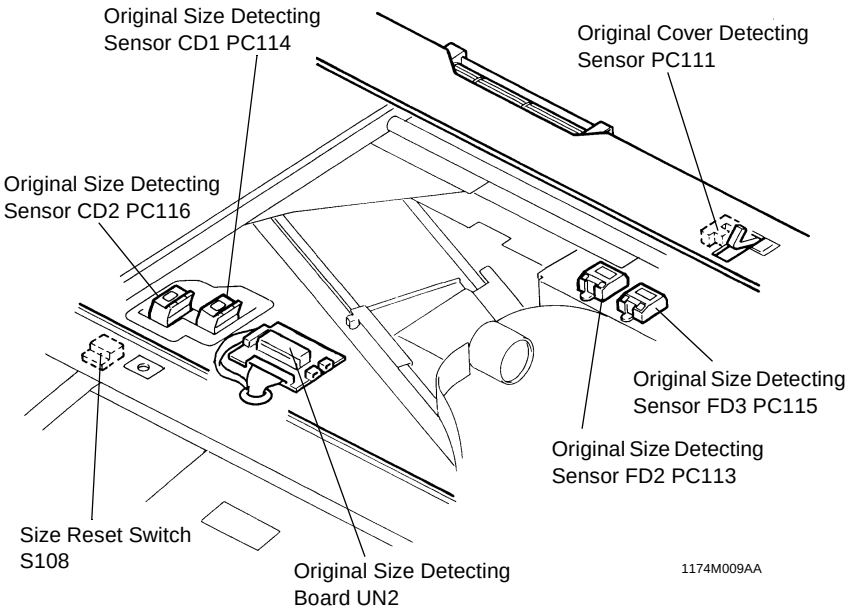

1174SBM1002A

10-2. Original Size Detecting Operation

Each photo receiver of the original size detecting sensors responds to reflected light of a given intensity with reference to the intensity of the light emitted by each LED. This allows the Original Size Detecting Board to determine whether or not there is an original within a set distance.

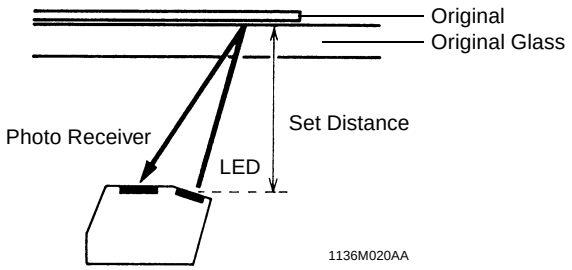

1174SBM1003A

10-3. Sensor Locations

- The number and location of the Original Size Detecting Sensors vary depending on the marketing area as shown below.

Areas \ Sensors	CD1 (PC114)	CD2 (PC116)	FD2 (PC113)	FD3 (PC115)
Metric Areas	❍	●	❍	●
Inch Areas	❍	●	❍	●
Mixed inch/metric Areas	❍	❍	❍	❍
U.S.A and Canada Areas	●	●	●	●

❍: Standard ●: Optional

NOTE

If the optional sensors are installed, set Jumper Connector JP2 on the Original Size Detecting Board as illustrated below and run the F7 operation.

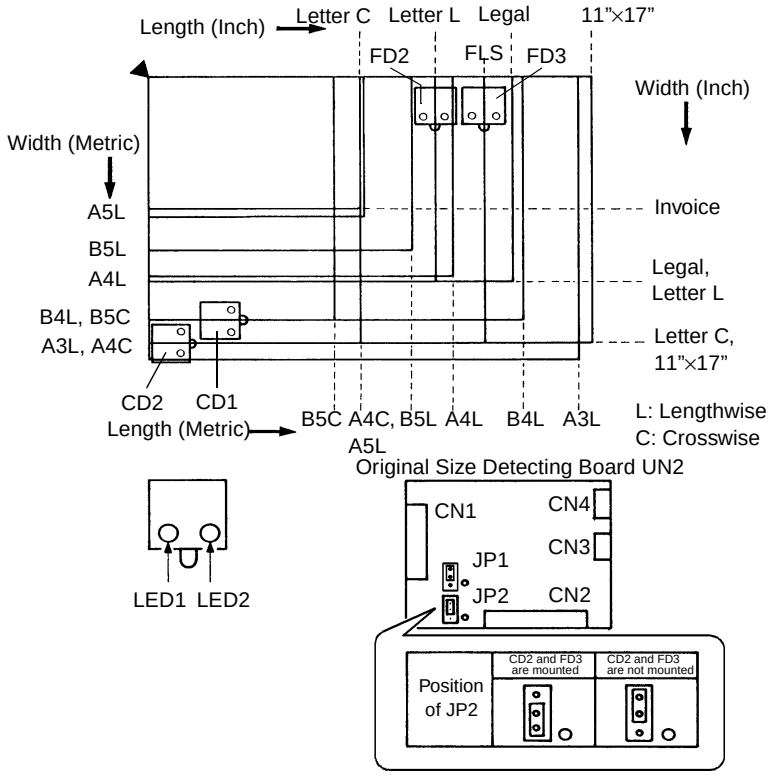

1174M012AB

1174SBM1004A

10-4. Size Detection

- The Original Size Detecting Board reads the output data provided by the original size detecting sensors. By comparing the data from each sensor with the threshold level, it determines whether there is an original placed on the Original Glass. The Original Size Detecting Board then determines the size of the original according to the combination of the data.

Metric Area

		FD2		FD3		CD1		CD2
Original Size	Size Determined by UN2	LED1	LED2	LED1	LED2	LED1	LED2	LED1
A3L	A3L (A3L)	❍	❍	❍(❍)	❍(●)	❍	❍	❍(❍)
B4L	B4L (B4L)	❍	❍	❍(❍)	❍(●)	●	❍	●(●)
A4L	A4L (A4L)	❍	❍	●(●)	●(●)	●	●	●(●)
A5L	A5L (A5L)	●	●	●(●)	●(●)	●	●	●(●)
A4C	A4C (A4C)	●	●	●(●)	●(●)	❍	❍	❍(❍)
Letter L: 8-1/2"×11"	Letter L (Letter L)	❍	●	●(●)	●(●)	●	●	●(●)
11"×17"	11"×17" (A3L)	❍	❍	❍(❍)	❍(●)	❍	❍	●(❍)
Legal: 8-1/2"×14"	Legal (A4L)	❍	❍	❍(●)	❍(●)	●	●	●(●)
FLS: 8-1/2"×13"	FLS (A4L)	❍	❍	❍(●)	●(●)	●	●	●(●)
Letter C: 11"×8-1/2"	Letter C (A4C)	●	●	●(●)	●(●)	❍	❍	●(❍)
No Original	A5L	●	●	●(●)	●(●)	●	●	●(●)

Inch Area

		FD2		FD3		CD1	
Original Size	Size Determined by UN2	LED1	LED2	LED1	LED2	LED1	LED2
11"×17"	11"×17" (11"×17")	❍	❍	❍(❍)	❍(❍)	❍	❍
Legal: 8-1/2"×14"	Legal (Legal)	❍	❍	❍(❍)	❍(❍)	●	●
Letter L: 8-1/2"×11"	Letter L (Letter L)	❍	●	●(●)	●(●)	●	●
Letter C: 11"×8-1/2"	Letter C (Letter C)	●	●	●(●)	●(●)	❍	❍
FLS: 8-1/2"×13"	FLS (Legal)	❍	❍	❍(❍)	●(❍)	●	●
Invoice: 5-1/2"×8-1/2"	Invoice	●	●	●(●)	●(●)	●	●
No Original	Invoice	●	●	●(●)	●(●)	●	●

✻ ❍: Original Present ●: Original Not Present

✻ If no optional sensors are mounted, data is processed as indicated in ( ) and the original sizes determined by the Size Detecting Board are as indicated in ( ).

✻ The Original Size Detecting Board does not use the data provided by LED2 of Original Size Detecting Sensor CD2 for the determination of the original size.

✻ Any non-standard size is rounded off to the nearest standard size.

✻ When all sensors detect no original, the Original Size Detecting Board determines that A5L or Invoice size is present.

1174SBM1005A

10-5. Original Size Detection Timing

Master CPU on the Master Board affirms and resets the readings of the original size at the following timings.

- Takes size readings: When the Original Cover is raised to an angle of 15° or more (Original Cover Detecting Sensor is deactivated).
- Affirms size readings: When the Original Cover is lowered to an angle of 15° or less (Original Cover Detecting Sensor is just activated); or, when the Start key is pressed with the Original Cover Detecting Sensor in the deactivated state.
- Resets size readings: When the Original Cover is raised (Size Reset Switch is deactuated).

1174SBM1006A

10-6. Original Cover Angle Detection (23 cpm Copier Only)

The Original Cover Detecting Sensor detects the angle of the Original Cover as it is raised. The following control is provided.

Original Cover raised to an angle of 15° or more:
The size of the original is read by the Original Size Detecting Sensors.

Original Cover raised to an angle of less than 15°:
When the Original Cover Detecting Sensor is activated, the original size data is latched and Original Size Detecting Board UN2 transmits the size data to the Master Board. As soon as the Size Reset Switch is turned ON, the size data is validated and the paper size is shown on the control panel.

The paper size selected is reset when the Size Reset Switch is turned OFF.

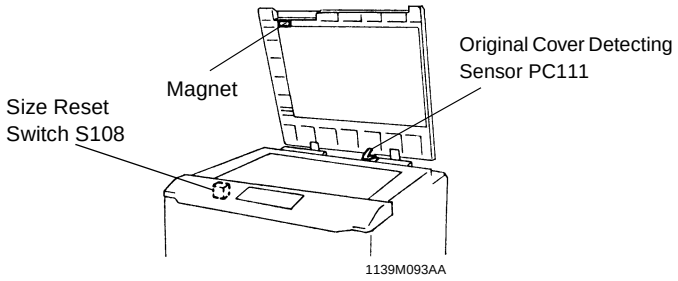

	Control Signal	Blocked	Unblocked	WIRING DIAGRAM
PC111	PWB-A PJ18A-2	L	H	12-B

	Control Signal	ON	OFF	WIRING DIAGRAM
S108	PWB-A PJ23A-11B	L	H	6-C

1174SBM1100A

11 DEVELOPMENT

The Developing Unit built into the Imaging Unit performs the following functions:

- Mixes the toner and carrier well to ensure that a sufficient amount of toner is positively charged.
- Detects the toner-to-carrier ratio of the developer by means of the ATDC Sensor and replenishes the supply of toner as necessary.
- Detects a toner empty condition by means of the ATDC Sensor.
- Ensures that a proper amount of toner is attracted to the PC Drum by means of its Sleeve/Magnet Roller, Developing Bias, and Doctor Blade.

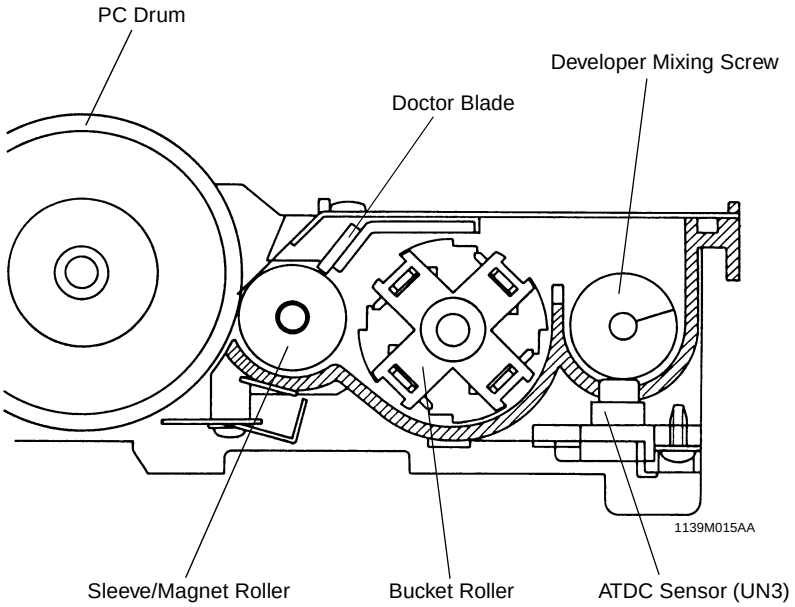

1174SBM1101A

11-1. ATDC Sensor

The ATDC Sensor installed on the underside of the Developer Mixing Chamber detects the varying toner-to-carrier ratio of the developer which flows over it in the Chamber. The copier CPU compares the detected ratio with the ratio set by the ATDC Detection Level Mode (Tech. Rep. Choice C-90) to control toner replenishment.

Set T/C (%)	ATDC Output Voltage (V)
6.0	2.5 (Standard)

Toner is replenished for 5 seconds (the Toner Bottle is turned one turn, which is equivalent to a run of 2 copy cycles) for each Toner Replenishing signal.
If the toner-to-carrier ratio becomes lower than 3.5% in a toner-empty condition, the copier inhibits the initiation of a new copy cycle (this feature can be enabled or disabled by a Tech. Rep. Choice mode). When a ratio of 4% or more is recovered as a result of Auxiliary Toner Replenishing, the copier permits the initiation of a new copy cycle.
If the Front Door is swung open and closed with a T/C ratio of less than 4%, the copier initiates an Auxiliary Toner Replenishing sequence. (It stops the sequence as soon as a T/C ratio of 4.5% is reached.)

ATDC Sensor Automatic Adjustment
An automatic adjustment of the ATDC Sensor is made in the F8 Test Mode operation and when a new Imaging Unit is installed in the copier.

✻ When a New Imaging Unit is Installed in the Copier:
Following the execution of the starter setup mode upon power-up, the copier CPU reads the output value of the ATDC Sensor and establishes the reading as the reference value.

✻ When F8 is Run after Starter Has Been Changed:
Following the execution of the starter setup mode upon pressing of the Start Key, the copier CPU reads the output value of the ATDC Sensor and establishes the reading as the reference value.

NOTE
If an F8 operation is run at a time when the starter has not been changed, it can result in a wrong T/C reference value being set by the copier. Avoid casual use of F8.
If the setting value has been cleared because of the RAM Board being replaced, however, enter the ATDC control value before the replacement using the Zoom Up/Down Keys in the F8 operation (without pressing the Start Key).

Toner Empty Detection

The copier has no toner empty detecting sensor and, instead, the ATDC Sensor performs that function. The ATDC Sensor checks the toner-to-carrier ratio and, if it reads a T/C ratio lower than the set level for 37 copies and, further, if it next reads a ratio 1% lower than the setting, this is a toner-empty condition. The toner-empty condition is canceled after detection under any of the following conditions when the Front Door is swung open and closed:

- T/C is 4% or more: The toner-empty condition is canceled.
- T/C is less than 4%: The copier initiates an Auxiliary Toner Replenishing sequence and cancels the toner-empty condition as soon as T/C reaches 4.5%.

	Control Signal	Set T/C	Standard Output Voltage	WIRING DIAGRAM
UN3	PWB-A PJ10A-3	6.0%	2.5	2-H

1174SBM1102A

11-2. Magnet Roller

The Magnet Roller of the Sleeve/Magnet Roller of this copier has the following magnetic characteristics. Part of pole S2 before the principal N1 pole (i.e., the area marked as S2b in the Fig. below) provides a very weak magnetic force. If developer is compacted and clogs at the Doctor Blade and, as a result, part of the surface of the Sleeve/Magnet Roller is not covered with developer, the nearby developer around S2b goes to those uncovered areas because of its weak magnetic force. This helps prevent blank lines from occurring on the copy.

The Sleeve Roller, onto which developer is attracted by the magnetic fields of force set up by the poles of the Magnet Roller, turns to convey the developer toward the point of development.This also means that developer fresh from the Developer Mixing Chamber is always brought to the point of development.

As noted earlier, the Imaging Unit integrates the Developing Unit with the PC Drum into one body. Because of that, it is impossible to move the Developing Unit against the PC Drum, thereby providing a certain distance between the PC Drum and Sleeve/Magnet Roller. The Sleeve/Magnet Roller has therefore been made movable: the Bushing is pressed by compression springs thereby pressing the Positioning Collars on both ends of the Sleeve/Magnet Roller against the PC Drum. This ensures a given distance between the PC Drum and the Sleeve/Magnet Roller.

Magnetic Pole Positioning

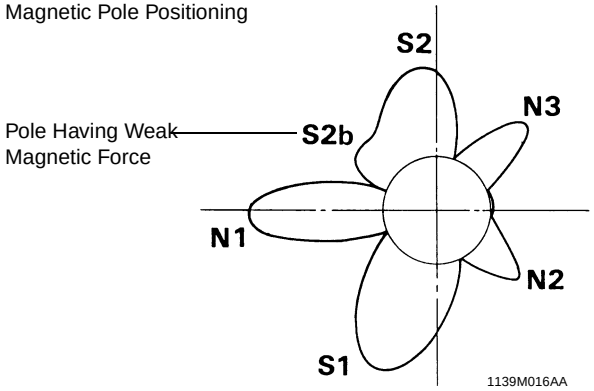

1139M016AA

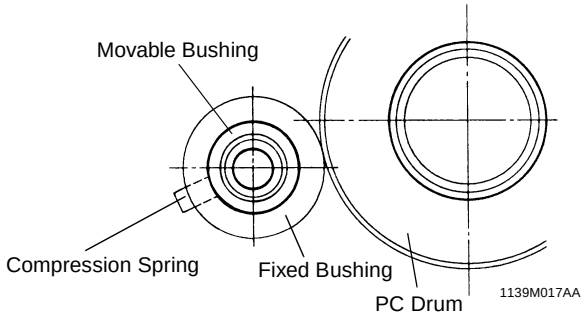

1139M017AA

1174SBM1103A

11-3. Developing Bias

A negative voltage (Vb = Developing Bias voltage) is applied to the Sleeve Roller to prevent a foggy background on the copy. The amount of toner attracted onto the surface of the PC Drum depends on how much lower the PC Drum surface potential (Vi) is than Vb (i.e., the potential difference).

- When the potential difference is large, a greater amount of toner is attracted.
- When the potential difference is small, a smaller amount of toner is attracted.

Because the Sleeve/Magnet Roller of this copier is movable, a flat spring is used as the Bias Terminal which follows the movement of the Sleeve/Magnet Roller.

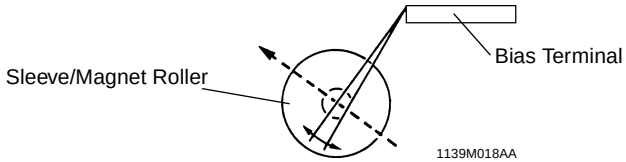

1139M018AA

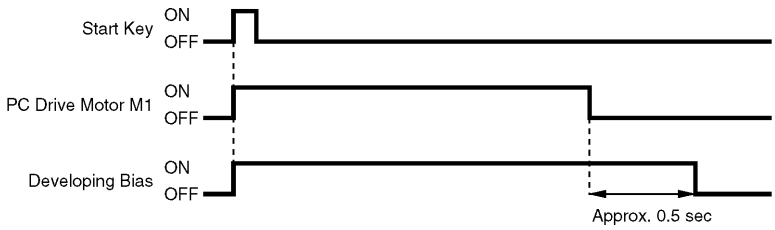

1151T01MCA

	Control Signal	ON	OFF	WIRING DIAGRAM
Developing Bias	PWB-A PJ11A-8A	L	H	2-H

1174SBM1104A

11-4. Doctor Blade

The Doctor Blade installed over the Sleeve/Magnet Roller regulates the height of the developer brush on the surface of the Sleeve Roller. The Blade is perpendicular to the direction of movement of the Sleeve/Magnet Roller to minimize variations in the distance between the Doctor Blade and Sleeve/Magnet Roller as the Sleeve/Magnet Roller moves.

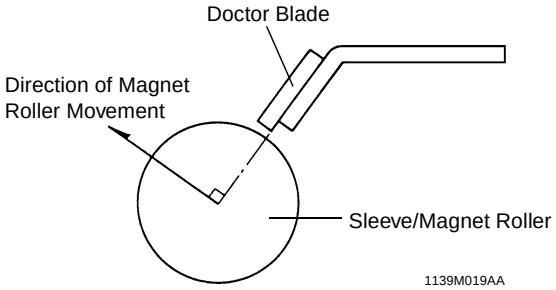

1174SBM1105A

11-5. Sleeve/Magnet Roller Lower Filter

✻ Except the U.S.A., Canada, and Europe

There is a slit provided under the Sleeve/Magnet Roller to collect insufficiently charged toner in the grounded Toner Antispill Trap. This effectively prevents the toner from spilling onto the mechanisms inside the copier.

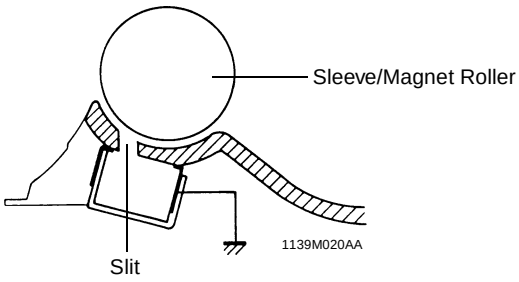

1174SBM1200A

12 TONER HOPPER

1174SBM1201A

12-1. Toner Hopper Locking/Unlocking

The Toner Hopper is not integrated into the Imaging Unit; instead, it is secured to the copier. To replace an empty Toner Bottle, the user first needs to swing the Toner Bottle Holder out 40° to the front. The Holder pivots about the Toner Supply Port as it is swung out or in, which effectively prevents toner from spilling when the Holder is swung out or in.

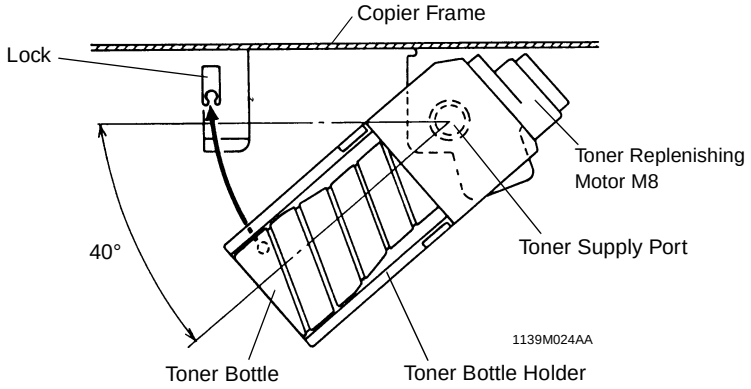

1174SBM1202A

12-2. Toner Replenishing

- Drive from the Toner Replenishing Motor is transmitted via the motor shaft to the Bottle Cap Claw, which turns the Toner Bottle. As the Toner Bottle is fitted to the Coupling, both turn together during toner replenishing.
- A Metering Chamber provided at the toner supply port of the Coupling regulates the amount of toner that falls through the port.
- There is a supply port for the exclusive use of the starter. The starter does not pass through the Metering Chamber, which means that it takes a shorter time to load the starter.

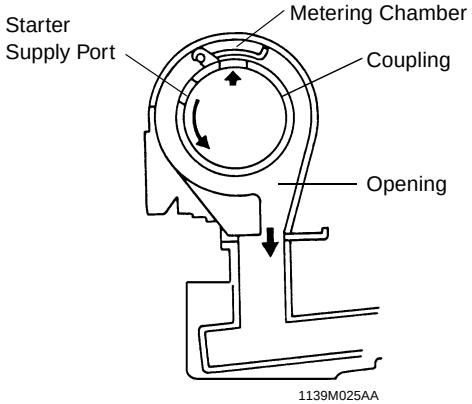

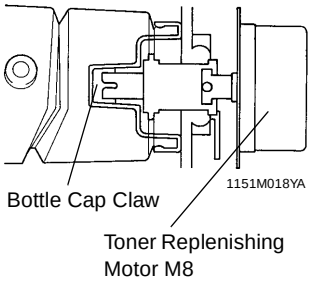

1174SBM1203A

12-3. Shutter

The connection between the Toner Hopper and Imaging Unit is provided with a Shutter which prevents toner from spilling when the Imaging Unit is slid out of the copier.

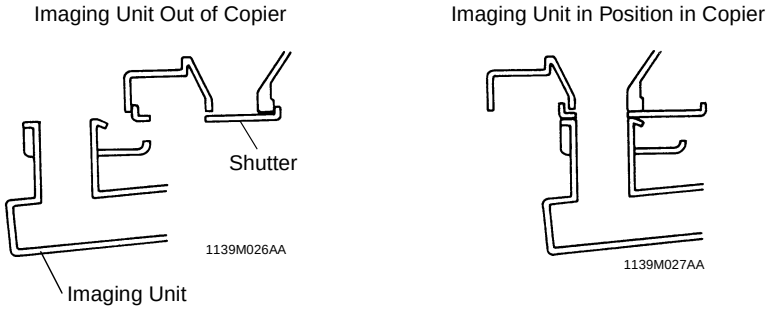

1174SBM1204A

12-4. Toner Hopper Home Position Detection

The Coupling is fitted with a Home Position Plate which is detected by the Toner Hopper Home Position Sensor. This ensures that the Toner Bottle is located so that its opening is positioned on top whenever the Toner Replenishing Motor is deenergized.

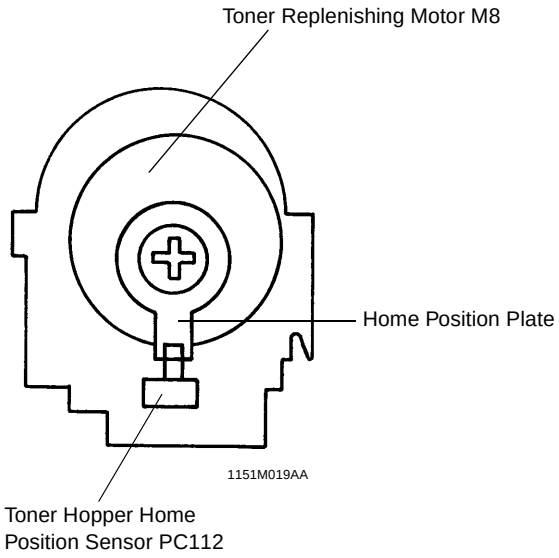

1174SBM1205A

12-5. Toner Bottle Vibration

When the indentations at three places on the left-hand end (as viewed when the Toner Bottle is in position) of the Toner Bottle move past the protrusion in the Toner Bottle Holder, the Toner Bottle is vibrated to prevent some of the toner from remaining unconsumed in the Bottle.

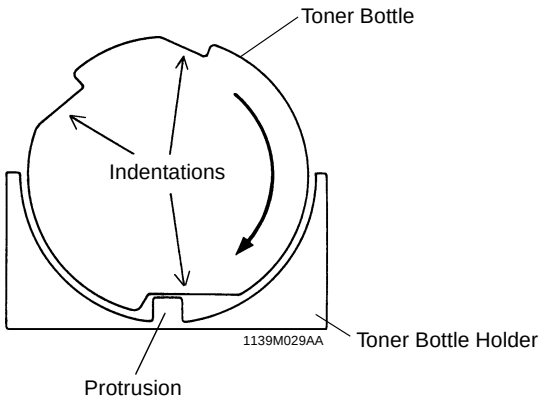

1174SBM1206A

12-6. Toner Replenishing Control

1. The ATDC Sensor installed in the Imaging Unit reads the toner-to-carrier ratio of the developer in the Developer Mixing Chamber for each copy cycle.
2. It samples the ratio 16 times and compares each with the preset level.
3. If eight or more readings out of the total 16 are lower than the preset level, a Toner Replenishing signal is output.
4. The Toner Replenishing Motor is turned one complete turn for each Toner Replenishing signal (which is equivalent to a supply of 0.3 to 0.6 g toner).

✻ The readings taken while the Toner Replenishing Motor is turning (it takes 5 seconds for the Toner Replenishing Motor to turn one complete turn) are ignored. This means that, in a multi-copy cycle, the ATDC Sensor may take readings as the next copy cycle is started while the Toner Replenishing Motor is turning; but, those readings are ignored.

	Control Signal	Energized	Deenergized	WIRING DIAGRAM
M8	PWB-A PJ5A-6	H	L	2-D

	Control Signal	Blocked	Unblocked	WIRING DIAGRAM
PC112	PWB-A PJ17A-2B	L	H	2-D

	Control Signal	Set T/C	Reference Voltage	WIRING DIAGRAM
UN3	PWB-A PJ10A-3	6.0%	2.5	2-H

1174SBM1300A

13 PAPER TAKE-UP/FEED SECTION (2ND DRAWER: 23 cpm COPIER ONLY)

The copier is equipped with two Paper Drawers, 1st and 2nd, that can be slid out to the front of the copier. Each can hold up to 250 sheets of paper.

The 1st Drawer is a universal paper size type, while the 2nd Drawer is a fixed paper size type.

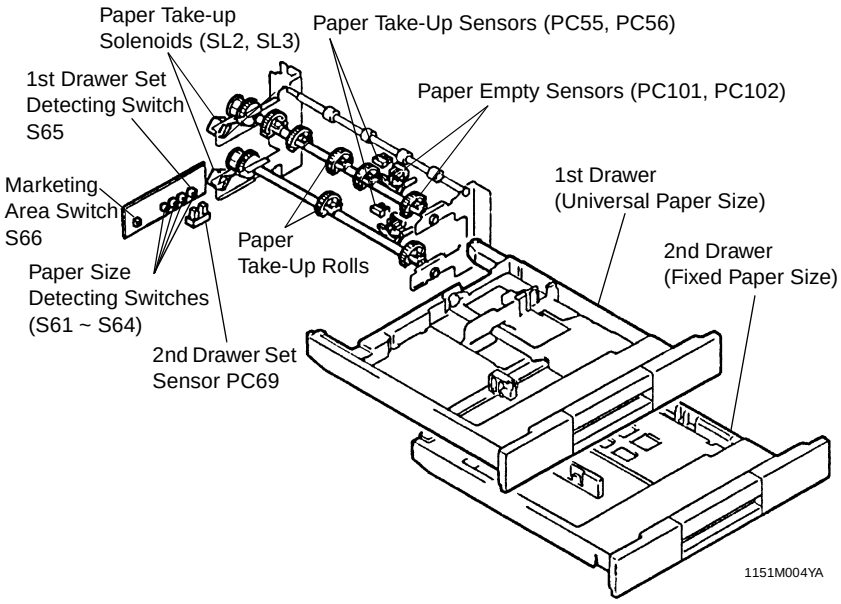

Paper Sizes That Can be Loaded

	Marketing Area Switch S66	1st Drawer	2nd Drawer
Inch Areas	Inch	5.5” × 8.5”, 8.5” × 11”, 8.5” × 14”, 11” × 8.5”, 11” × 14”, 11” × 17”	8.5” × 11” [LETTER], 11” × 8.5” [LETTER], 8.5” × 13” [G.LEGAL], 8.5” × 14” [LEGAL], 11” × 17”, 5.5” × 8.5” [INVOICE], 8” × 10.5” [G.LETTER] 10.5” × 8” [G.LETTER], 8-1/4” × 13”, 10” × 14”, 11” × 14”, 210 × 280, 280 × 210, 216 × 297, 216 × 320, 220 × 280, 220 × 330, 280 × 420
	Metric	A5L, A4L, A4C, A3L 8” × 13”, 8.5” × 13” [G.LEGAL] 8-1/4” × 13”	

	Marketing Area Switch S66	1st Drawer	2nd Drawer
Metric Areas	Metric	A3L, B4L, A4L, A4C, A5L, B5C, B5L (Taiwan Only), 8" × 13", 8.5" × 13"✻, 8-1/4" × 13"	A3L, B4L, A4L, A4C, A5L, 8" × 13" 8-1/4" × 13", 10" × 8" [QUARTO], 210 × 280, 216 × 297, 297 × 216, 216 × 320, 220 × 280, 297 × 430
	Inch	5.5" × 8.5" [INVOICE], 8.5" × 11" [LETTER]✻, 8.5" × 14" [LEGAL]✻, 11" × 17"✻	

✻ Except Taiwan

1174SBM1301A

13-1. Edge Guide and Trailing Edge Stop

1st Drawer

The 1st Drawer is a universal type allowing the user to slide freely the Edge Guide and Trailing Edge Stop to accommodate paper of different sizes.

The Edge Guide and Trailing Edge Stop can be locked into position by meshing the notches in the Lock Lever with those in the Drawer.

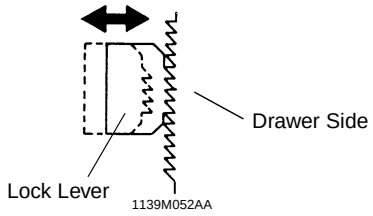

Trailing Edge Stop

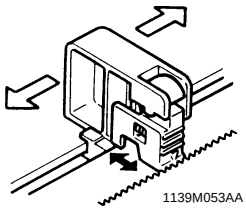

Edge Guide

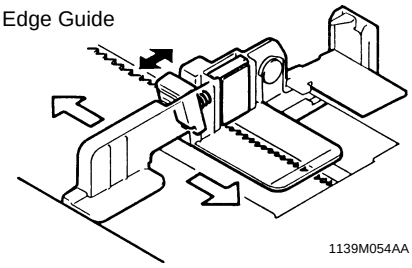

2nd Drawer

The 2nd Drawer is a fixed paper size type, in which the Edge Guide and Trailing Edge Stop are screwed into fixed positions.

The Edge Guide is provided with an Edge Pad (which is Velcro) that prevents double feed and ensures that the paper stack keeps its correct alignment with regard to the paper path reference position.

1174SBM1302A
13-2. Drawer Positioning

Each of the 1st and 2nd Drawers is positioned by fitting its Positioning Plate on the paper take-up end into the groove in the Drawer Frame. It is then secured in position by the magnet installed in the Drawer Front Cover on the paper take-up end. The tabs on both sides at the front of the Drawer ensure that the Drawer clicks into position. Any deviation in the paper path reference position can be adjusted within ±2 mm by moving the Front Cover of the Drawer to the front or rear.

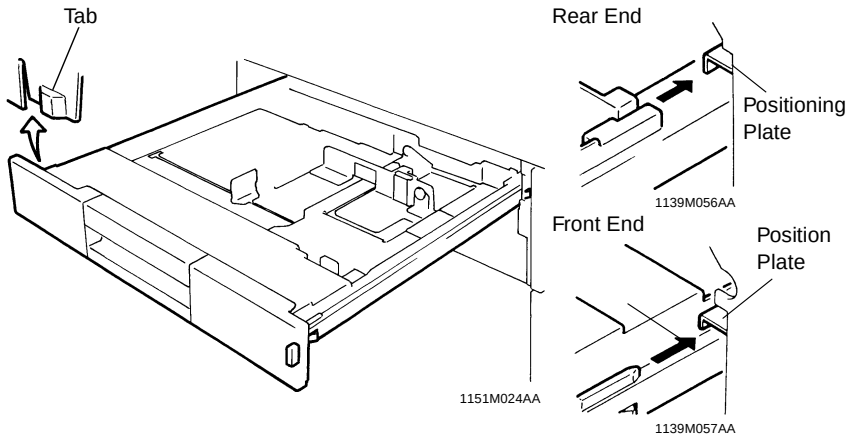

1174SBM1303A
13-3. Paper Lifting Plate

The Paper Lifting Plate of each Drawer is raised at all times by two Paper Lifting Springs.

For the 2nd Drawer, the type and position of the Paper Lifting Springs must be changed according to the paper size. (For details, see DIS/REASSEMBLY, ADJUSTMENT.)

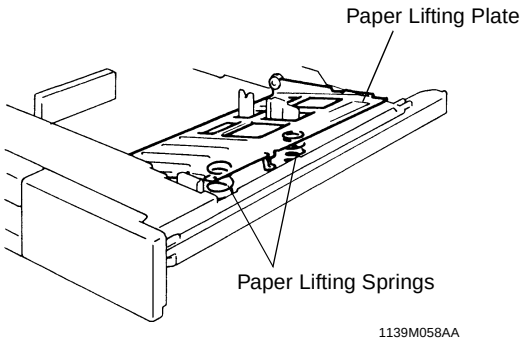

1174SBM1304A

13-4. Drawer-in-Position Detection

The copier detects that the Drawer is slid into position as follows.

1st Drawer

When the 1st Drawer is slid into the copier, the Drawer Frame presses the 1st Drawer Set Detecting Switch installed on the back panel of the copier.

2nd Drawer

When the 2nd Drawer is slid into the copier, the Rib on the Drawer Frame blocks the 2nd Drawer Set Sensor.

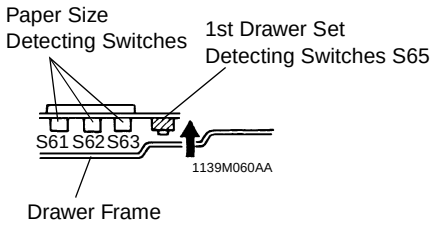

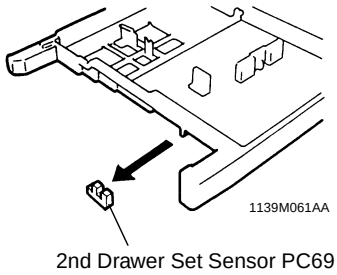

<Control>

	Control Signal	ON	OFF	WIRING DIAGRAM
S65	PWB-A PJ15A-11	L	H	15-B

	Control Signal	Blocked	Unblocked	WIRING DIAGRAM
PC69	PWB-A PJ2A-2	L	H	17-A

1174SBM1305A

13-5. Universal Tray (1st Drawer) Paper Size Detection

The length (feeding direction) and width (crosswise direction) of the paper are independently detected and the copier determines the paper size by combining the two separate detections made.

On the bottom of the tray is a lever fitted to the Trailing Edge Stop and another lever fitted to the Edge Guide. These levers actuate and deactuate Paper Size Detecting Switches to allow the copier to determine a particular paper size.

The Marketing Area Switch is used to set the type of paper to be used (inch or metric).

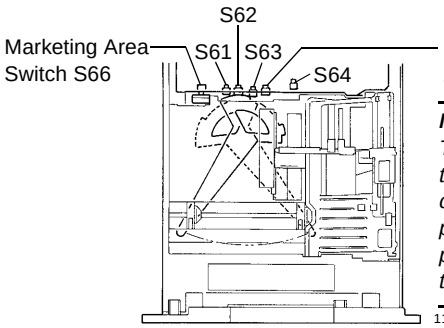

1151M003AA

NOTE

The number and the installed position of the Paper Take-Up Rolls vary depending on the marketing areas: inch or metric. See pp. M-43 and M-44 for the sizes of the paper that can be taken up and fed out of the drawer.

Paper Size Detecting Switches				Paper Length	Inch/Metric Setting Switch S66	
Length (FD)			Width (CD)		Metric	Inch
S61	S62	S63	S64			
ON	ON	ON	–	~402.0	A3	11” × 17”
ON	ON	OFF	OFF	402.0~349.2	B4	8-1/2” × 14”
			ON			11” × 14”
ON	OFF	OFF	OFF	349.4~317.2	FLS	8-1/2” × 14”
			ON			11” × 14”
OFF	OFF	OFF	–	317.2~272.0	A4L	Letter L
OFF	OFF	ON	OFF	272.0~222.0	B5L	Letter L
			ON			Letter C
OFF	ON	ON	OFF	222.0~195.0	A5L	Invoice L
			ON		A4L	Letter C
OFF	ON	OFF	OFF	195.0~	B5C	Letter C
			ON			Letter L

The 2nd Drawer accepts only paper of a fixed size and has no paper size detecting system. (The paper size is input from the control panel using a Tech. Rep. Mode.)

<Control>

	Control Signal	ON	OFF	WIRING DIAGRAM
S61	PWB-A PJ15A-1	L	H	14-A
S62	PWB-A PJ15A-3	L	H	14-A
S63	PWB-A PJ15A-6	L	H	15-A
S64	PWB-A PJ15A-9	L	H	15-A
S66	PWB-A PJ2A-4	L	H	17-B

1174SBM1306A
13-6. Paper Empty Detection

When the Drawer runs out of paper, the Actuator for the Paper Empty Sensor drops into the cutout in the Paper Lifting Plate. This activates the Paper Empty Sensor and the copier detects that the Drawer has run out of paper.

As noted earlier, the Paper Lifting Plate is raised at all times by the Paper Lifting Springs. To prevent the Actuator for the Paper Empty Sensor from being caught by the paper stack when the Drawer is slid out of the copier, it is tilted slightly. This, however, results in the operating stroke of the Actuator becoming small, which increases the possibility of the Actuator activating the Sensor by the flexing of a sheet of paper as it is taken up and fed in. To prevent this false detection of a paper-empty condition, the paper empty detection is enabled only when the Paper Take-Up Roll is in the retracted position.

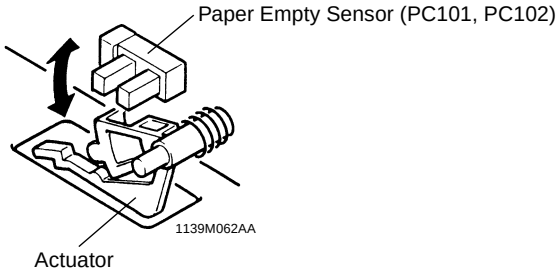

<Control>

	Control Signal	Blocked	Unblocked	WIRING DIAGRAM
PC101	PWB-A PJ4A-6	L	H	17-F
PC102	PWB-A PJ3A-4	L	H	17-D

1174SBM1307A

13-7. Paper Separating Mechanism

Each Drawer has Fingers that separate the top sheet of paper from the rest of the paper stack at paper take-up. The Fingers are fitted to the right front and rear corners of the Drawer. When the Paper Take-Up Roll starts turning to take up the top sheet of paper, its turning force is directly transmitted to the top sheet of paper as it is in direct contact with the Paper Take-Up Roll. That force overcomes the block of the Fingers, causing the top sheet of paper to ride over the Fingers and be fed out of the Drawer into the copier.

As to the second sheet of paper, the paper transport force obtained through friction with the top sheet of paper is weak and does not allow the second sheet of paper to ride over the block of the Fingers. Hence, the second sheet of paper remains stationary with the rest of the paper stack in the Drawer.

When there are only two sheets of paper left in the Drawer, the bottom sheet can be fed with the top one if the friction of the Paper Lifting Plate is weak. The Friction Plate affixed to the Paper Lifting Plate prevents this from happening.

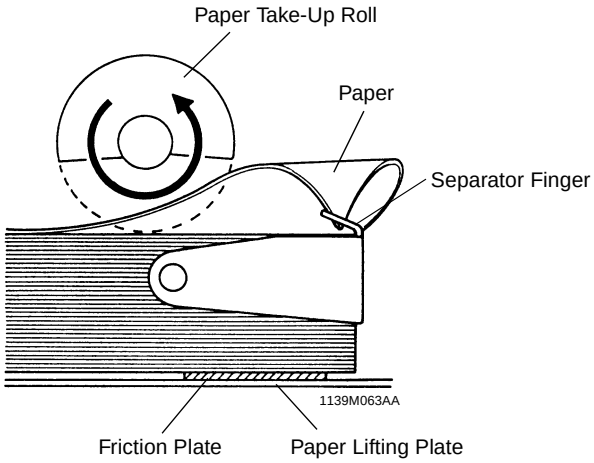

1174SBM1308A

13-8. Paper Take-Up Roll

Since the Paper Lifting Plate is raised at all times by the Paper Lifting Springs, paper is wedged in the mechanism when the Drawer is slid out of the copier if the Paper Take-Up Roll is round in shape. So the Take-Up Roll is semicircular and the circular part of the Roll is positioned on top at times other than take-up. For convenience, we call this position of the Paper Take-Up Roll the “retracted” position.

The Paper Take-Up Roll is grooved to keep good friction even under heavy loading. The 1st Drawer, which is a universal type to accommodate paper of different sizes, is provided with five (four in areas using only inch paper) Paper Take-Up Rolls. The 2nd Drawer accommodating paper of a fixed size only is equipped with two Rolls whose positions must be changed according to the paper size. (For the positions, see DIS/REASSEMBLY, ADJUSTMENT.)

The Paper Take-Up Roll is driven when the Paper Take-Up Solenoid is energized. The Roll is turned one complete turn for each single sheet of paper.

The Paper Take-Up Sensor is used to detect whether a sheet of paper has been properly taken up or not.

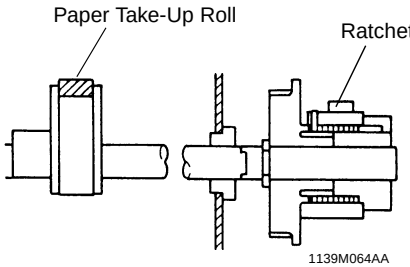

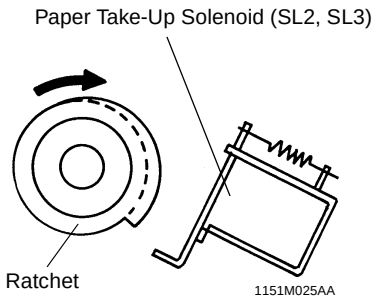

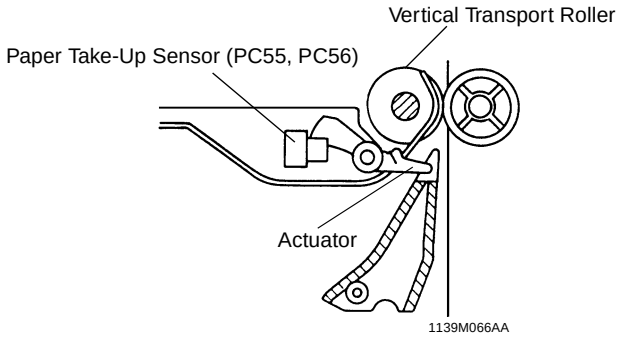

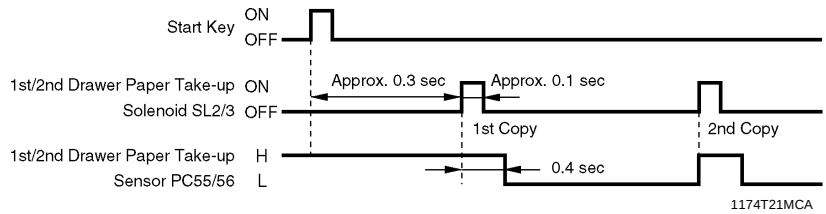

	Control Signal	Energized	Deenergized	WIRING DIAGRAM
SL2	PWB-A PJ4A-9	L	H	17-F
SL3	PWB-A PJ3A-2	L	H	17-D

	Control Signal	Blocked	Unblocked	WIRING DIAGRAM
PC55	PWB-A PJ4A-2	H	L	17-F
PC56	PWB-A PJ3A-7	H	L	17-E

1174SBM1309A

13-9. Paper Take-Up Retry Control

To minimize the occurrence of paper misfeed due to a slippery Paper Take-Up Roll, the Paper Take-Up Solenoid is energized a second time if a sheet of paper fails to reach the Paper Take-Up Sensor within T sec. after the solenoid has been deenergized. The solenoid is energized this second time 0.5 sec. after the above-mentioned period of T sec. has elapsed. (This is referred to as the paper take-up retry function.)

A misfeed results if the sheet of paper does not reach the Paper Take-Up Sensor even after three paper take-up sequences (initial take-up plus two retries).

Here is the control timing chart.

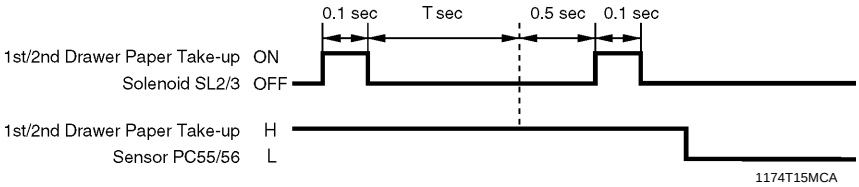

	1st Drawer	2nd Drawer
T	1.3 sec.	1.6 sec.

1174SBM1310A

13-10. VERTICAL PAPER TRANSPORT

The sheet of paper taken up by the Paper Take-Up Roll from the Drawer is fed along the Paper Guide to the Vertical Transport Rollers. The paper fed by the Vertical Transport Rollers reaches the Transport Rollers and is then fed up to the Synchronizing Rollers. The Transport Rollers are turned and stopped by the Paper Transport Clutch. The Transport Roller Sensor immediately before the Transport Rollers detects a sheet of paper fed from the Vertical Transport Section or Manual Bypass Table.

The Cover for the Vertical Transport Section (i.e., the Side Door) can be opened and closed for clearing misfeeds. The Side Door Detecting Sensor detects whether or not this Cover is open.

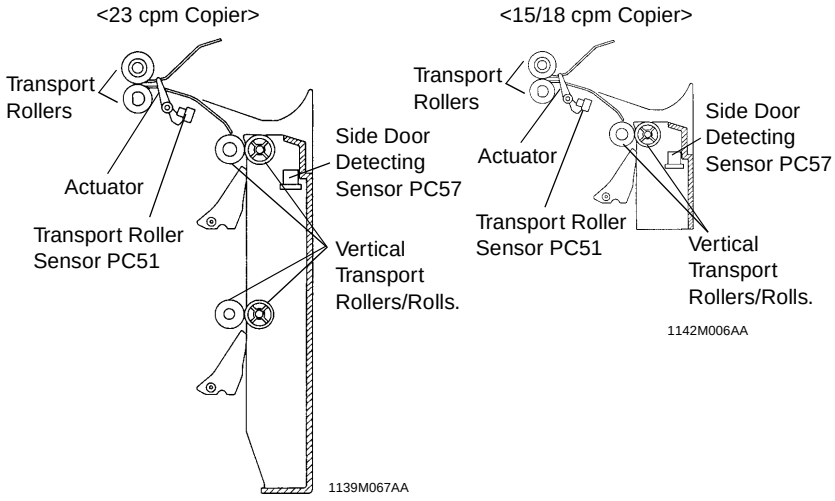

<Control>

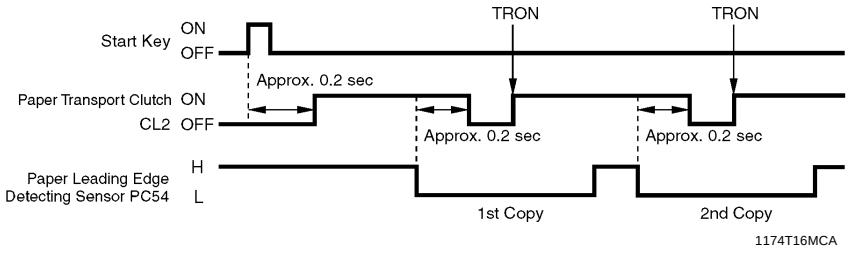

	Control Signal	Energized	Deenergized	WIRING DIAGRAM
CL2	PWB-A PJ5A-2A	L	H	4-B

	Control Signal	Blocked	Unblocked	WIRING DIAGRAM
PC54	PWB-A PJ17A-2A	L	H	4-D

1174SBM1400A

14 MULTI BYPASS TABLE

The optional Multi Bypass Table permits the user to make multiple copies (up to 50) on paper that cannot be fed automatically via any built-in paper drawer of the copier.
✻ Standard on 23 cpm copier, optional on 18 cpm copier and 15 cpm copier.

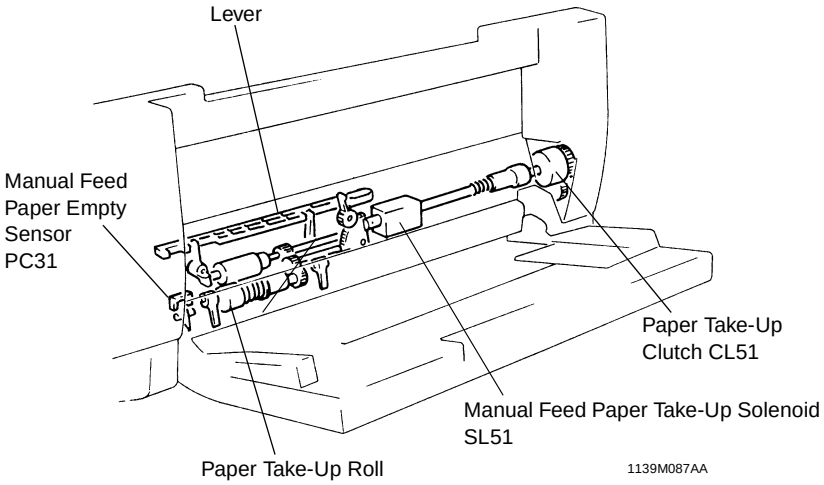

1174SBM1401A

14-1. Paper Take-Up Mechanism

The Paper Take-Up Rolls are normally in their raised (retracted) position so that they will not hamper proper loading of paper. When the Start Key is pressed, the Manual Feed Paper Take-Up Solenoid is deenergized causing the Paper Take-Up Rolls to press the paper stack downward and take up a sheet of paper.

Paper Stoppers are provided that block the leading edge of the paper stack as it is loaded on the Table, preventing any portion of the leading edge of the paper from getting inside. These Stoppers are unlocked at paper take-up, allowing paper into the copier.

Manual Feed Paper Take-Up Clutch controls the turning and stop of the Paper Take-Up Rolls.

In Standby

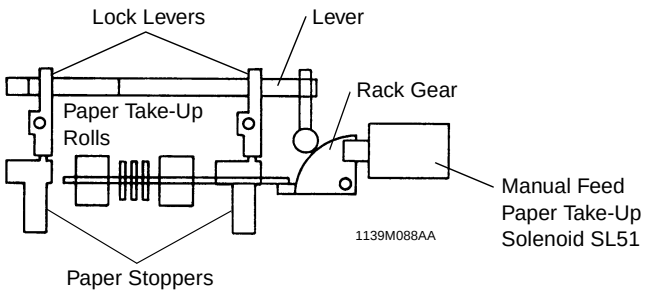

At Take-Up

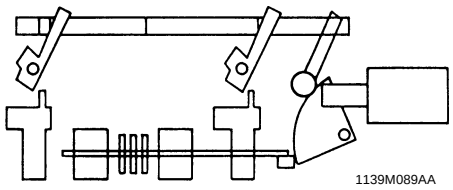

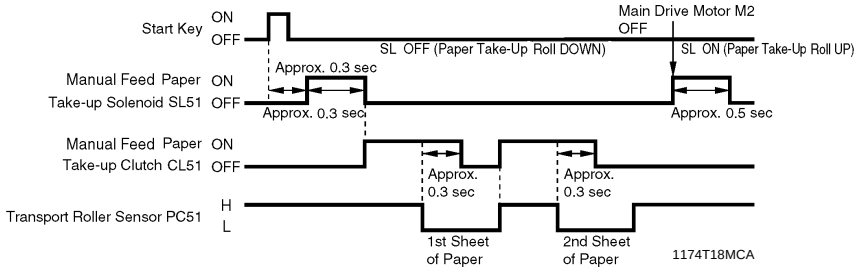

	Control Signal	Energized	Deenergized	WIRING DIAGRAM
CL51	PWB-A PJ5A-4B	L	H	17-H
SL51 DOWN	PWB-A PJ5A-2B	L	H	17-H
SL51 UP	PWB-A PJ5A-3B	L	H	

1174SBM1402A

14-2. Paper Take-Up Retry Control

To minimize the occurrence of a paper misfeed due to a slippery Paper Take-Up Roll, the Manual Feed Paper Take-Up Clutch is kept deenergized for a given period of time before it is energized again, if a sheet of paper fails to reach the Transport Roller Sensor even after the lapse of a given period of time after the clutch has first been energized. (This is referred to as the paper take-up retry function.)

A misfeed results if the sheet of paper does not reach the Transport Roller Sensor even after three paper take-up sequences (initial take-up plus two retries).

Here is the control timing chart.

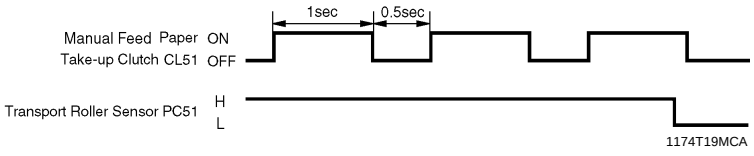

1174SBM1403A
14-3. Paper Separating Mechanism

The paper separating mechanism ensures that only the top sheet of paper is fed in by separating the second sheet of paper from the top one. This is accomplished by the Torque Limiter fitted to the Separator Roll shaft which stops the Separator Roll when there is a change in friction between the Feed and Separator Rolls.

1174SBM1404A
14-4. Paper Empty Detection

The Multi Bypass Table is equipped with a Manual Feed Paper Empty Sensor which detects a sheet of paper at the manual bypass port.

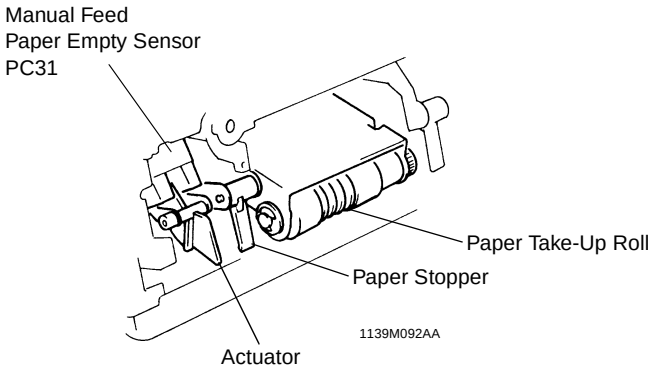

	Control Signal	Blocked	Unblocked	WIRING DIAGRAM
PC31	PWB-A PJ5A-6B	L	H	17-H

1174SBM1500A

15 SYNCHRONIZING ROLLERS

The Synchronizing Rollers, operating in phase with the Scanner's scan motion and paper feeding, synchronize the leading edge of the copy paper accurately with the leading edge of the toner image on the PC Drum.

The Upper Synchronizing Roller is a metal roller covered with a polyvinyl chloride tubing, while the Lower one is a rubber roller.

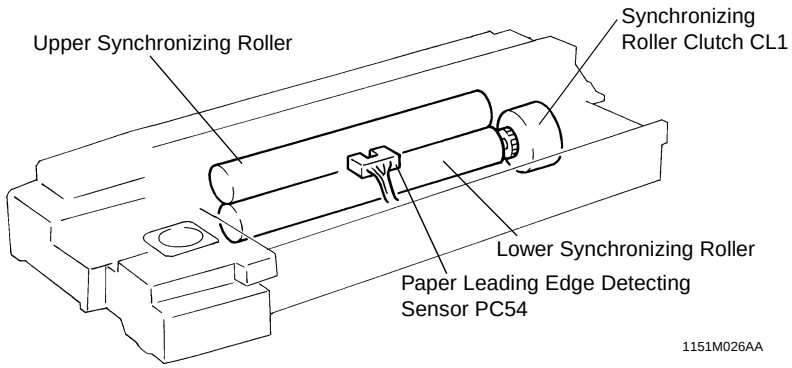

To facilitate clearing of misfeeds, the Upper Synchronizing Roller is installed in the Imaging Unit. It is fitted to the Guide Frame of the Imaging Unit and the Compression Springs at the front and rear ends press the Roller downward so that it makes contact with the Lower Synchronizing Roller. The Lower Roller is driven by the drive source, while there is a gear train that transmits the rotation of the Lower Roller to the Upper Roller, thus ensuring good paper transport performance.

To ensure good image transfer during conditions of high humidity, the Pre-Synch Guide Plate is electrically floated by a plastic spacer, grounded through an 82MΩ resistor and 1kV varistor.

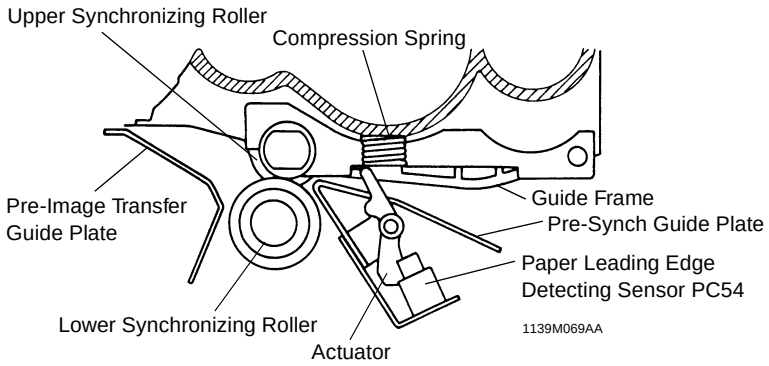

1174SBM1501A
15-1. Upper Synchronizing Roller Positioning

Since the Upper Synchronizing Roller is fitted to the Imaging Unit, it must be correctly positioned with reference to the Lower Synchronizing Roller when the Upper Half of the copier is swung down into the locked position. For this purpose, slits are cut in the lower copier frame and the Bushings of the Upper Synchronizing Roller fit into these slits.

The Upper Synchronizing Roller is grounded through the Bushings which are in contact with the frame. To positively ground the Roller, the Ground Plate fitted to the lower frame makes contact with the Shaft of the Upper Synchronizing Roller.

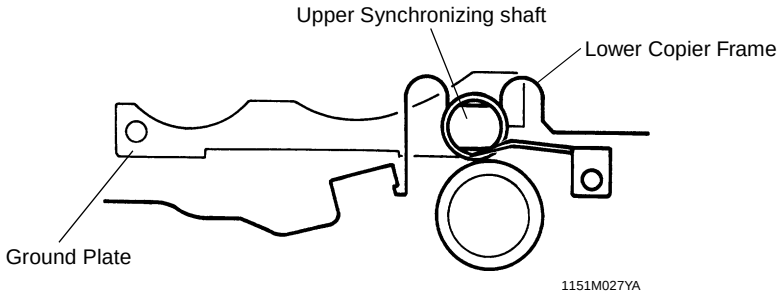

1174SBM1502A
15-2. Paper Dust Remover

The Paper Dust Remover is installed so that it makes contact with the Upper Synchronizing Roller. Since the Upper Synchronizing Roller is covered with a vinyl tubing, triboelectric charging occurs as the Roller turns in contact with the Paper Dust Remover. As paper is then fed between the Synchronizing Rollers, the charges on the tubing attract paper dust from the paper. The dust is then transferred onto the Paper Dust Remover.

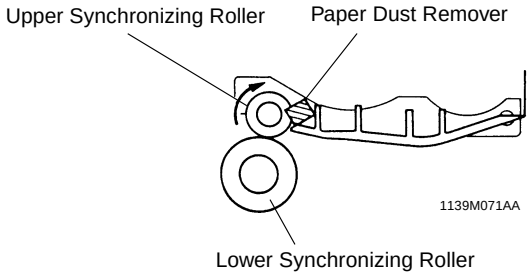

1174SBM1503A

15-3. Synchronizing Roller Control

The Synchronizing Rollers are started as the Synchronizing Roller Clutch is energized upon reception of a signal from the Master Board.

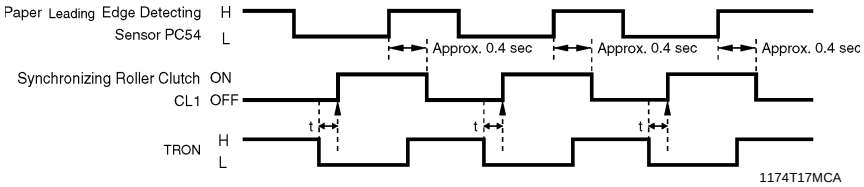

t: The value of t depends on the settings made in Adjust Mode.

	Control Signal	Energized	Deenergized	WIRING DIAGRAM
CL1	PWB-A PJ5A-4A	L	H	4-A

	Control Signal	Blocked	Unblocked	WIRING DIAGRAM
PC54	PWB-A PJ17A-2A	L	H	4-D

1174SBM1600A

16 IMAGE TRANSFER AND PAPER SEPARATION

Image Transfer

The Image Transfer Corona applies a DC negative corona emission to the underside of the paper thereby attracting the positively charged toner onto the surface of the paper to form a visible, developed image of the original. The Corona Unit is provided with a Corona Wire cleaning mechanism: the operator has only to pull out the Lever on which the Cleaner is mounted from the front of the copier, which cleans the Wire.

Paper Separation

The Paper Separator Corona showers the underside of the paper with both positive and negative charges so that the paper can be easily separated from the PC Drum. In addition, two Paper Separator Fingers physically peel the paper off the surface of the PC Drum. (For details, see PAPER SEPARATOR FINGERS.)

The Image Transfer/Paper Separator Coronas Unit is provided with a Pre-Image Transfer Guide Plate that determines the angle at which the paper comes into contact with the PC Drum and keeps an optimum distance between the paper and the PC Drum so that the image may be properly transferred onto the paper.

The Image Transfer/Paper Separator Coronas Unit is grounded via a 2.6MΩ resistor, which improves its efficiency to discharge to the PC Drum side, thus reducing the output current from the High Voltage Unit.

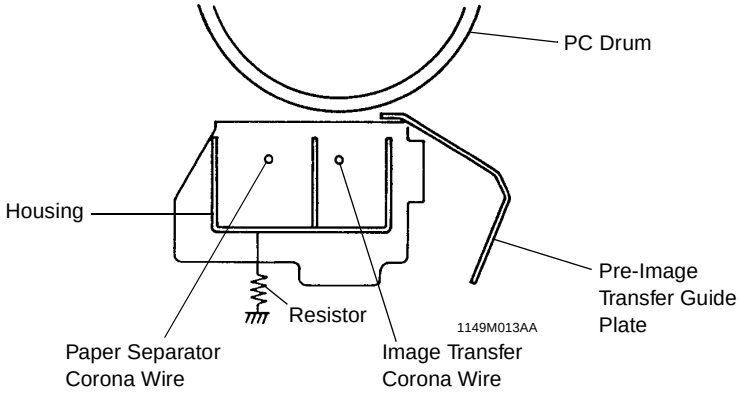

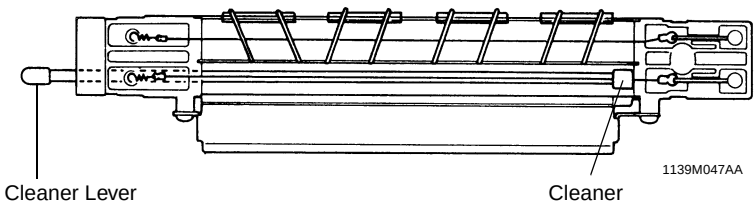

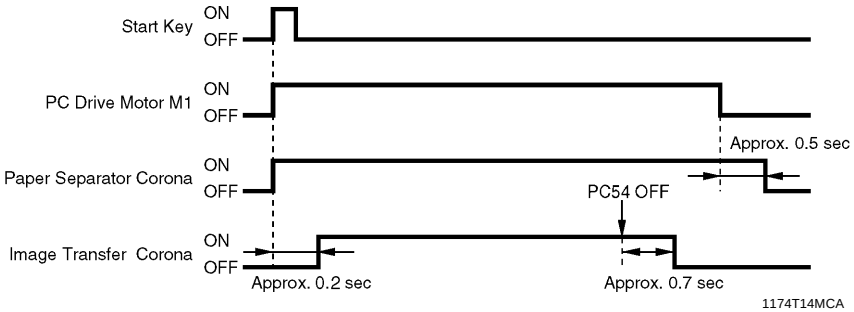

	Control Signal	ON	OFF	WIRING DIAGRAM
Image Transfer Corona	PWB-A PJ11A-9A	L	H	4-C
Paper Separator Corona	PWB-A PJ11A-8A	L	H	4-C

1174SBM1700A

17 MAIN ERASE LAMP

The Main Erase Lamp is turned ON to neutralize any surface potential remaining on the surface of the PC Drum after cleaning.

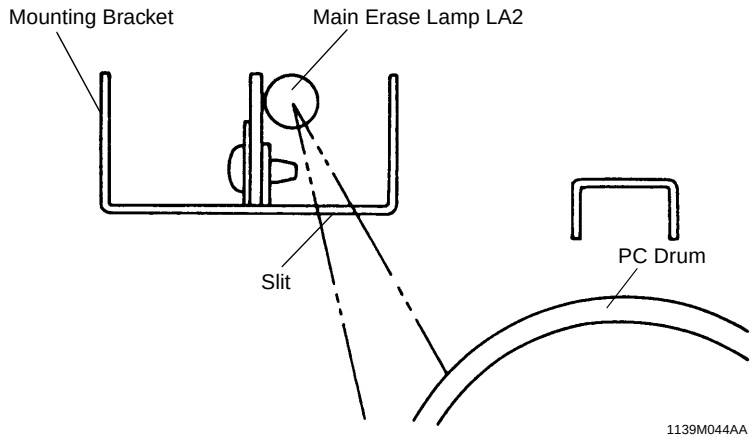

The Main Erase Lamp consists of five tungsten-filament lamps mounted on a Board.

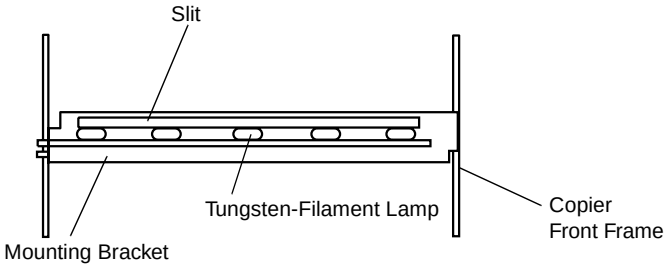

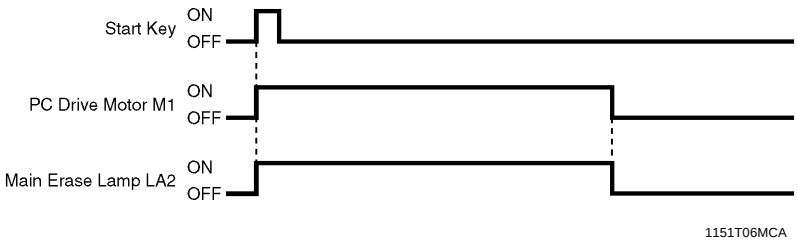

	Control Signal	ON	OFF	WIRING DIAGRAM
LA2	PWB-A PJ10A-7	H	L	2-I

1174SBM1800A

18 PAPER SEPARATOR FINGERS

After image transfer, an AC corona emission is applied to the underside of the paper by the Paper Separator Corona to neutralize the paper so that it can be easily separated from the PC Drum. To further ensure that the paper is positively separated from the PC Drum, there are two Paper Separator Fingers attached to the Imaging Unit. They physically peel the paper off the surface of the PC Drum.

The Paper Separator Fingers are made of plastic and are kept in constant contact with the surface of the PC Drum.

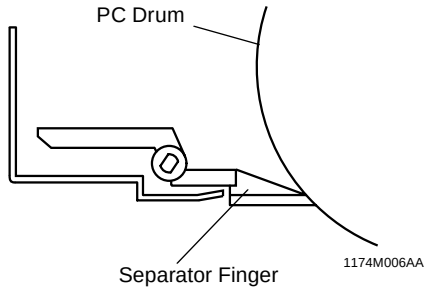

The Paper Separator Fingers are also moved back and forth over a given distance so that they will make contact with a wider surface area of the PC Drum, thus preventing localized damage to the PC Drum surface. This lateral movement is done by the Lever connected to the Cleaning Blade and, when the Cleaning Blade is moved, the Separator Fingers are also moved back and forth.

✻ Lateral Movement: 3.7 mm

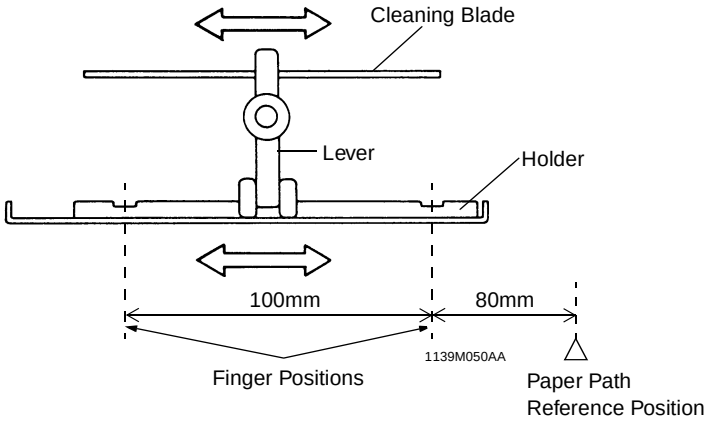

1174SBM1900A

19 CLEANING UNIT

The Cleaning Blade is pressed tightly against the surface of the PC Drum and scrapes off any toner remaining on the surface after image transfer and paper separation have been completed.

The Cleaning Blade is moved back and forth to prevent the PC Drum from deteriorating and the Cleaning Blade from warping away from the surface of the PC Drum.

A Toner Antispill Mylar is affixed to the Imaging Unit. It prevents toner scraped off the surface of the PC Drum from falling down onto the surface of the copy paper or the paper path.

In addition, a Side Seal and Brush Seal are affixed to both ends of the Imaging Unit on both sides of the Cleaning Blade. They prevent toner from spilling from both ends of the Cleaning Blade.

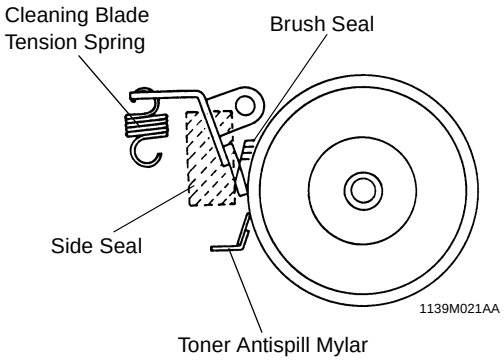

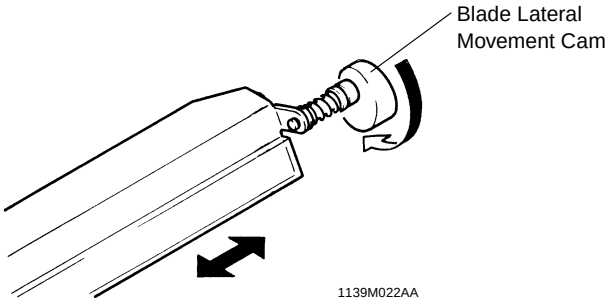

1174SBM1901A

19-1. Cleaning Bias

✻ Except the U.S.A., Canada, and Europe

A Cleaning Bias Seal is installed to minimize damage to the PC Drum from acid paper.

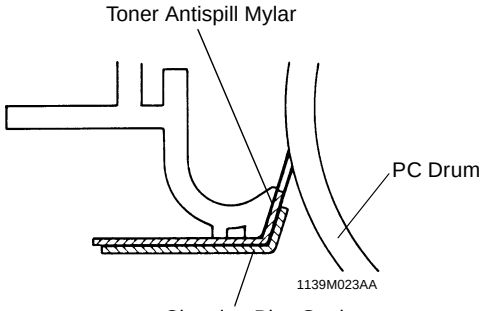

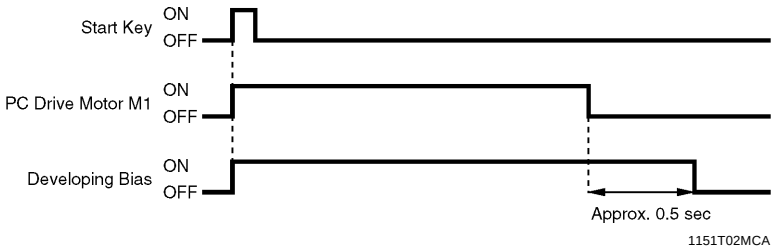

	Control Signal	ON	OFF	WIRING DIAGRAM
Cleaning Bias	PWB-A PJ11A-8A	L	H	2-H

1174SBM2000A

20 PAPER TRANSPORT

After having gone through the image transfer and paper separation processes, the paper is then transported to the Fusing Unit by the Suction Belts of the Suction Deck driven directly by the Main Drive Motor.

The Suction Fan Motor draws the paper onto the turning Suction Belts for positive transport of the paper.

The Suction Fan Motor is turned on/off at the same timing as the Main Motor.

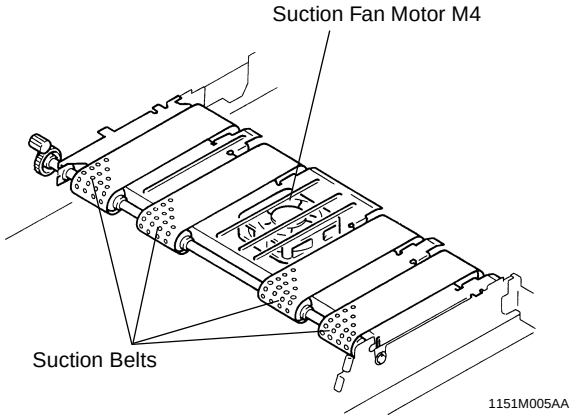

	Control Signal	Energized	Deenergized	WIRING DIAGRAM
M2	PWB-A PJ11A-14A	L	H	25-F
M4	PWB-A PJ5A-9A	L	H	4-B

1174SBM2100A

21 FUSING UNIT

The Upper Fusing Roller and Lower Fusing Roller together apply heat and pressure to the toner and paper to permanently fix the developed image to the paper.

Drive for the Upper Fusing Roller is transmitted from the Main Drive Motor to the Upper Fusing Roller Drive Gear. The Lower Fusing Roller and Cleaning Roller are driven by the respective Rollers in contact with them.

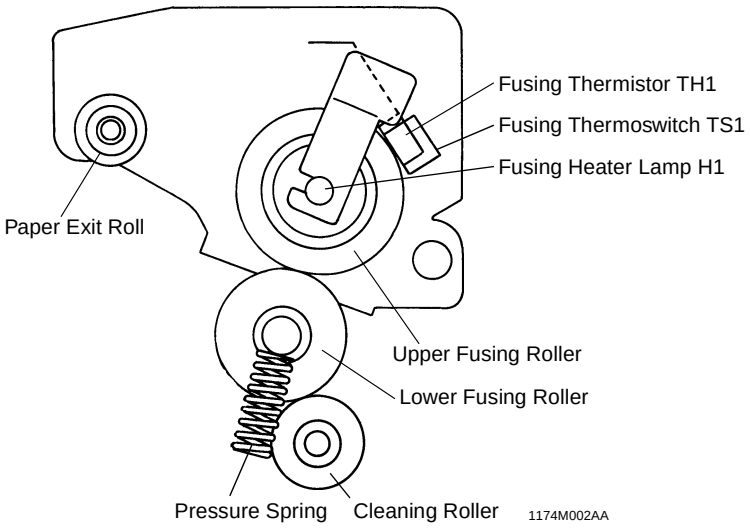

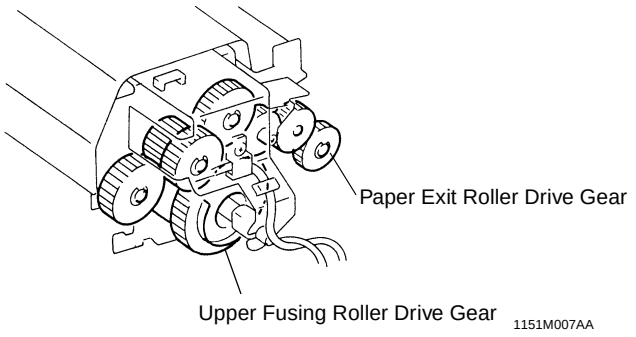

1174SBM2101A

21-1. Fusing Temperature Control

The Upper Fusing Roller is heated by a Fusing Heater Lamp which is an AC halogen lamp. The Fusing Thermistor installed on the Upper Fusing Roller helps keep the optimum fusing temperature.

The fusing temperature is normally controlled at 195°C. To ensure good fusing performance, however, even when the Lower Fusing Roller remains cool immediately after warm-up in the early morning, the temperature is controlled as follows when the copier is turned ON:

✻ If the initial fusing temperature is less than 90°C:
Temperature is controlled at 205°C for 3 min. after the copier has completed warming up, which is followed by a temperature control at 195°C.

✻ If the initial fusing temperature is less than 150°C:
Temperature is controlled at 205°C for 1 min. after the copier has completed warming up, which is followed by a temperature control at 195°C.

✻ If the initial fusing temperature is more than 150°C:
Temperature is controlled at 195°C after the copier has completed warming up.

TH1 is positioned at a point 84 mm from the paper path reference position, thereby preventing offset caused by low temperature and degraded fusing performance for small-size paper.

The control temperature in the Energy Saving Mode is 100°C.

The Fusing Thermoswitch, installed above the Upper Fusing Roller, cuts off the power to the Fusing Unit if the temperature of the Upper Fusing Roller becomes excessively high. It eliminates the possibility of a fire that could occur when the Fusing Heater Lamp remains ON due to a faulty temperature control circuit.

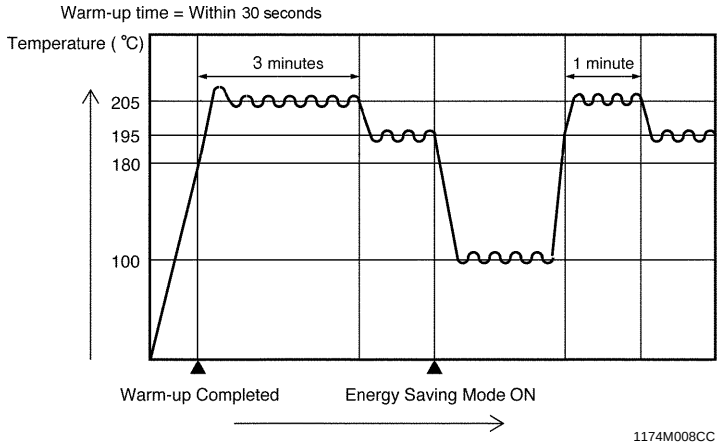

1174SBM2102A

21-2. Fusing Rollers Pressure Mechanism

Pressure Springs are installed at both ends of the Lower Fusing Roller. These springs contact the bearings mounted on both ends of the Lower Fusing Roller and exert pressure through the Lower Fusing Roller to the Upper Fusing Roller which is installed in the Fusing Unit.

The Fusing Unit is divided into an upper and a lower half, and the upper half can be swung open. The Upper Half of the copier, when locked in position, presses the upper half of the Fusing Unit down onto its lower half.

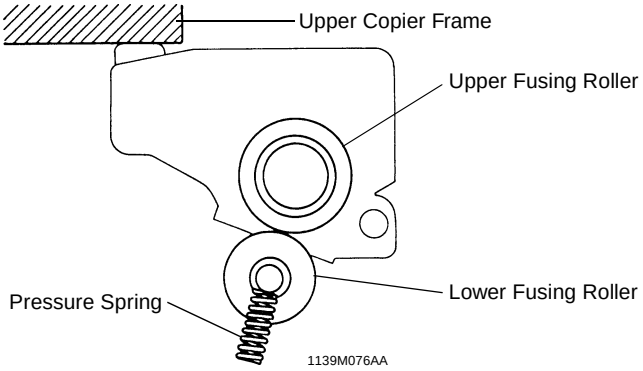

1174SBM2103A

21-3. Cleaning Roller

The Cleaning Roller is made up of a core aluminum roller around which a high temperature resistant paper based material is wound. As well as serving to clean the surface of the Upper and Lower Fusing Rollers, the Cleaning Roller also ensures that the temperature along the entire length of the Fusing Rollers does not rise excessively when, for example, continously feeding small size paper.

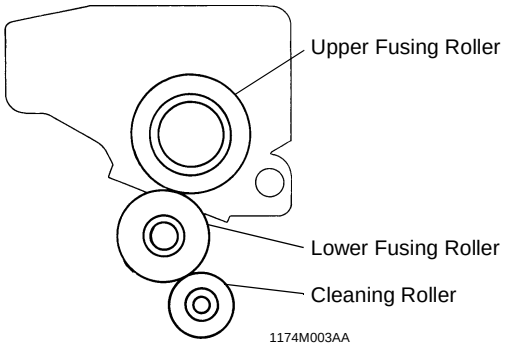

1174SBM2200A

22 EXIT UNIT

The Paper Exit Roller/Rolls feed the paper, to which the developed image has been fixed, out of the Fusing Unit onto the Copy Tray. The Charge Neutralizing Brush touches the surface of the sheet of paper being fed out of the Fusing Unit to neutralize any static charge left on it. The Upper and Lower Separator Fingers strip the paper from the surface of the Upper/Lower Fusing Rollers.

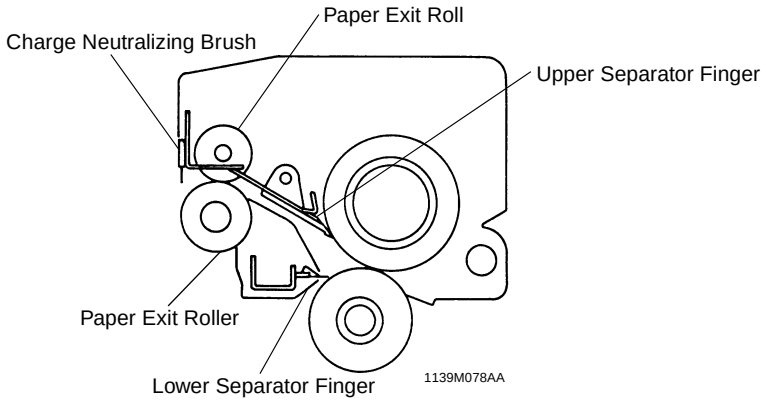

1174SBM2201A

22-1. Upper/Lower Separator Fingers

The Upper and Lower Separator Fingers are laid out as shown below to cope with many different paper sizes.

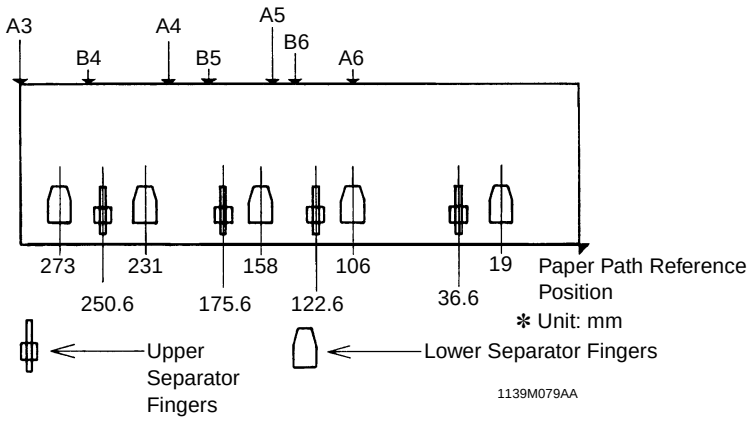

1174SBM2202A

22-2. Paper Exit Sensor

1st Paper Exit Sensor installed in the paper exit section of the lower half of the copier detects the sheet of paper being fed out of the Fusing Unit onto the Copy Tray.

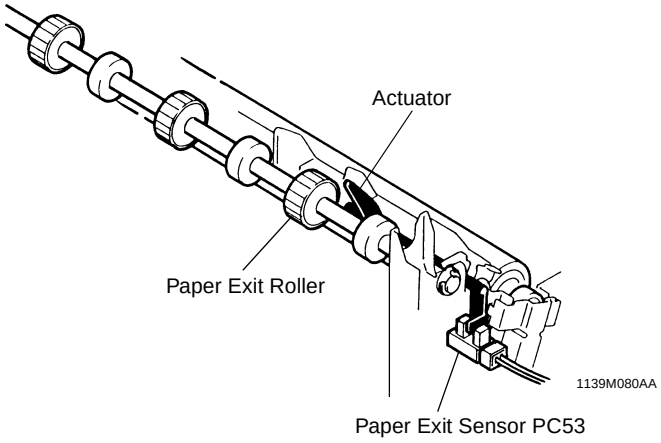

	Control Signal	Blocked	Unblocked	WIRING DIAGRAM
PC53	PWB-A PJ17A-8A	L	H	2-B

1174SBM2300A

23 EXIT/DUPLEX SWITCHING UNIT (OPTION)

If the copier is configured with an optional Sorter or Staple Sorter, or Duplex Unit (installed in the Cabinet), the Exit/Duplex Switching Unit must be fitted to the exit section of the copier.

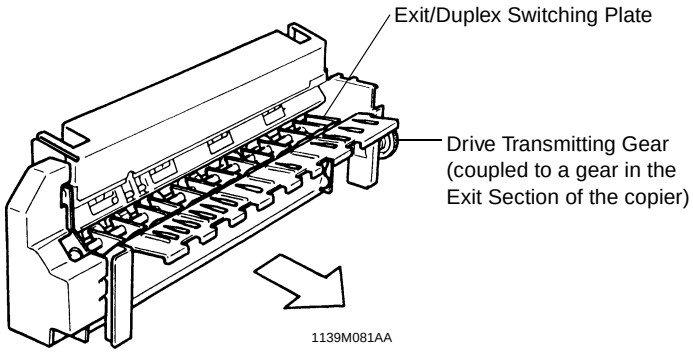

The Master Board outputs a signal to energize the Exit/Duplex Switching Solenoid, which switches the position of the Exit/Duplex Switching Plate. The Unit has a 2nd Paper Exit Sensor built into it which detects a sheet of paper being fed out of the Unit. (For more details of switching control, see the Service Manual for “DUPLEX UNIT.”)

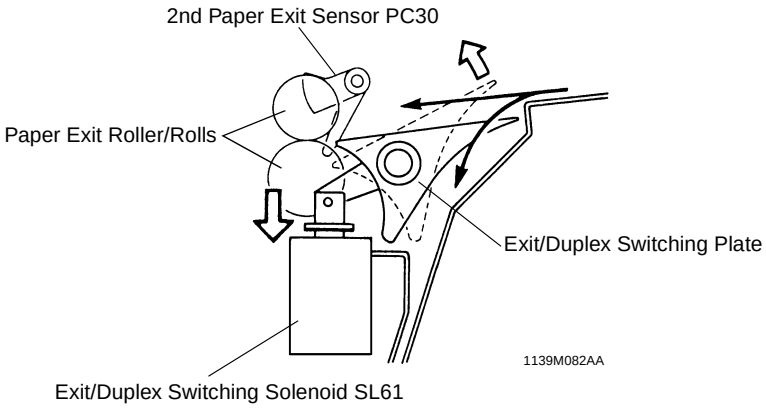

1174SBM2400A

24 DEHUMIDIFYING SWITCH (OPTION)

To prevent image transfer efficiency from being reduced due to damp paper in highly humid weather, a Paper Dehumidifying Heater is installed on the base frame of the copier under the 2nd Drawer.

A Drum Dehumidifying Heater is located under the Lower Guide Plate to prevent the PC Drum from forming condensation.

Both Drum and Paper Dehumidifying Heaters are ON when the Dehumidifying Switch is ON and the power cord plugged in. They are OFF it the Dehumidifying Switch is OFF.

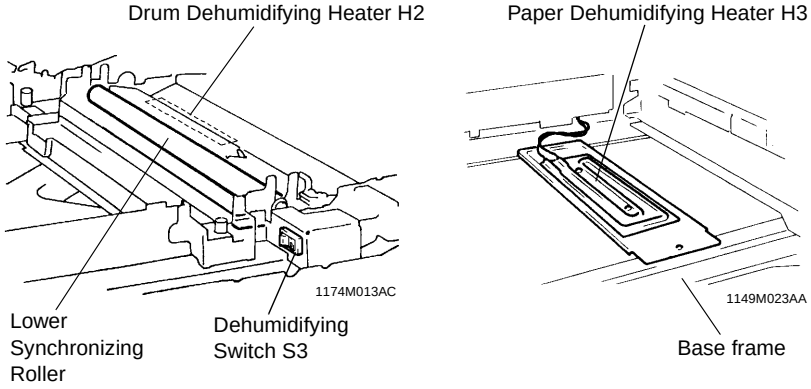

1174SBM2500A

25 COOLING FAN

Ozone produced by the PC Drum Charge Corona and Image Transfer/Paper Separator Coronas is drawn out of the copier by the Cooling Fan Motor and absorbed by the Ozone Filter.

The Cooling Fan Motor is turned either at high or low speed. It turns at high speed during the time the main motor is on and for 3 seconds after the power switch is turned on.

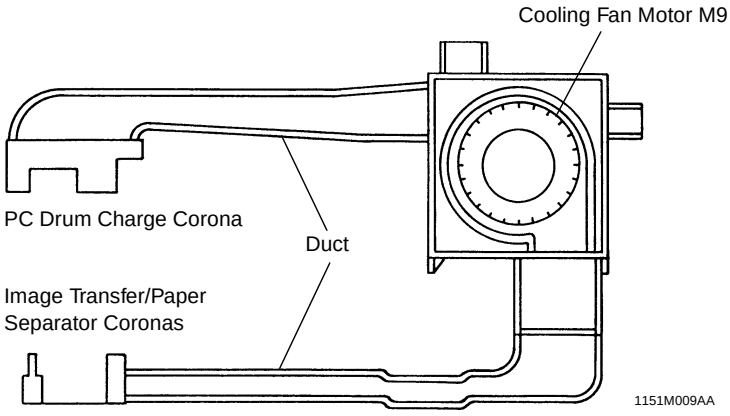

	Control Signal	Energized	Deenergized	WIRING DIAGRAM
M9	PWB-A PJ20A-3	H	L	11-A

1174SBM2600A

26 OPTICAL SECTION COOLING FAN

The Optical Section Cooling Fan Motor draws outside air into the copier and blows it against the Original Glass which is heated by the lit Exposure Lamp.

The Filter at the intake port of the Fan prevents dust and dirt from entering the Optical Section of the copier.

The Optical Section Cooling Fan Motor turns only while the Main Drive Motor is being energized.

<23 cpm copier>

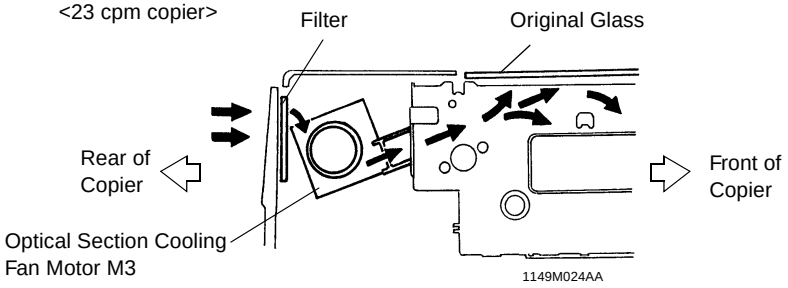

<15/18 cpm copier>

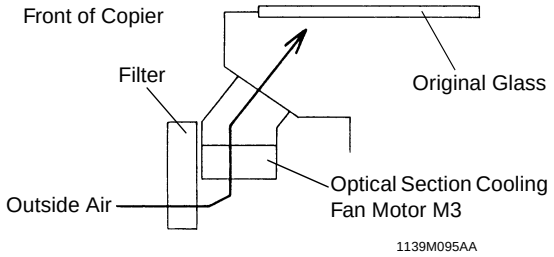

	Control Signal	Energized	Deenergized	WIRING DIAGRAM
M3	PWB-A PJ22A-2	L	H	5-F/5-G

1174SBM2700A

27 MEMORY BACKUP

IC1 (RAM) of the RAM Board connected to the Master Board stores the setting/adjustment values set in the Tech. Rep. Modes as well as the counter counts. The Backup Battery is mounted on the RAM Board to prevent the contents of memory from being lost when the power cord is unplugged or the RAM Board removed from the copier. The Backup Battery requires a voltage of 2V or more to retain the contents of memory.

Important
As noted above, the RAM stores critical data. If the RAM Board has been replaced with a new one, memory must first be cleared and then all settings be made again. It should also be noted that the RAM Board should not be replaced at the same time when the Master Board is replaced.

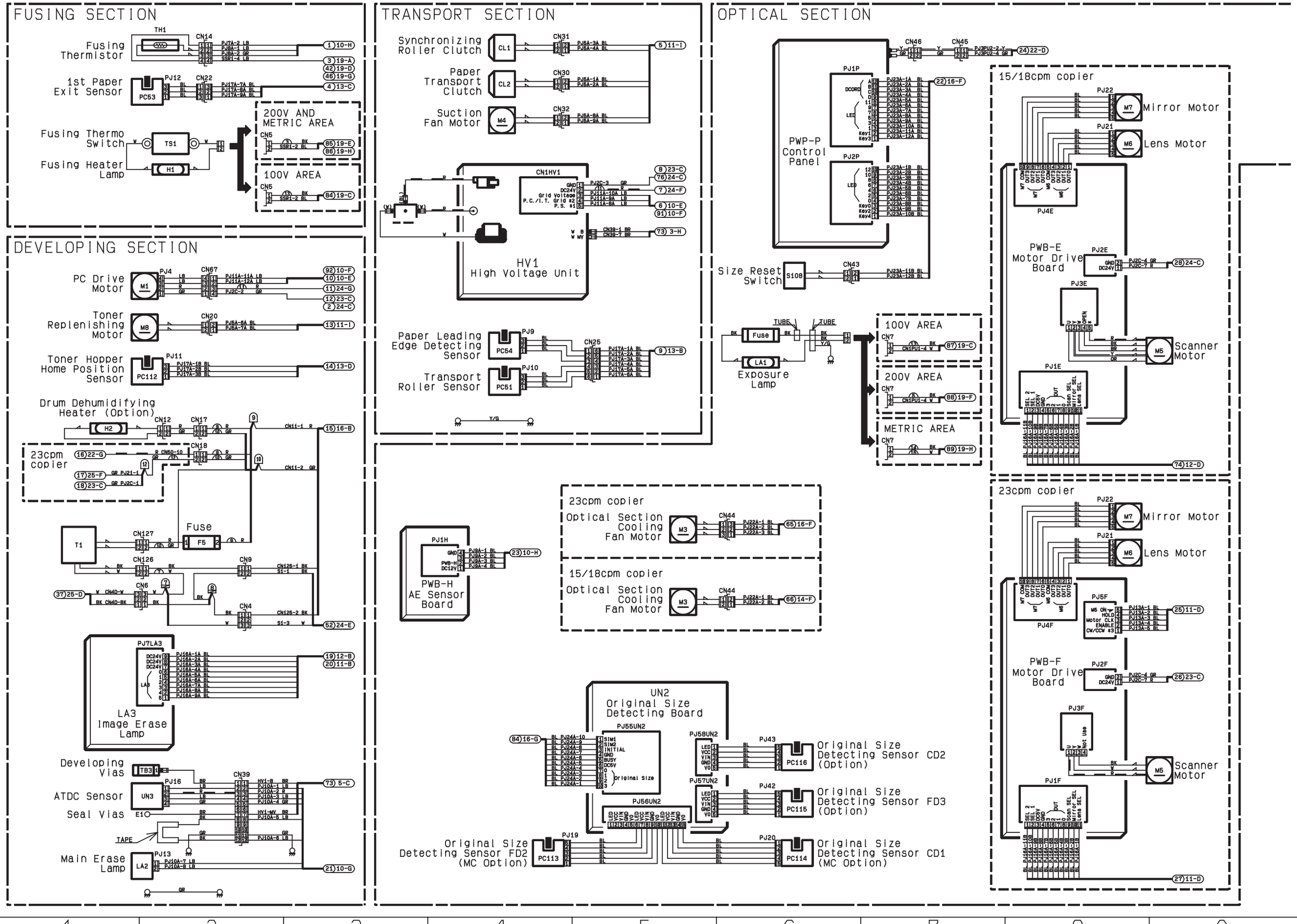
FUSING SECTION
TH1
CN14
Fusing Thermistor
1st Paper Exit Sensor
PC53
PJ12
CN22
Fusing Thermo Switch
TS1
Fusing Heater Lamp
H1
200V AND METRIC AREA
CN5
100V AREA
DEVELOPING SECTION
PC Drive Motor
M1
PJ4
CN67
Toner Replenishing Motor
M8
CN20
Toner Hopper Home Position Sensor
PJ11
PC112
Drum Dehumidifying Heater (Option)
H2
CN12
CN17
23cpm copier
CN18
CN50-10
CN11-1 R
CN11-2 GR
Fuse
F5
T1
CN127
CN126
CN9
CN125-1 BK
S1-1 BK
CN6
CN4
CN125-2 BK
S1-3 W
PJ7LA3
LA3
Image Erase Lamp
Developing Vias
TB3
PJ16
ATDC Sensor
UN3
Seal Vias
TAPE
CN39
HV1-B BR
PJ10A-1 LB
PJ10A-2 R
PJ10A-3 LB
PJ10A-4 GR
HV1-MV BR
PJ10A-5 LB
PJ10A-6 LB
Main Erase Lamp
LA2
PJ13
PJ10A-7 LB
PJ10A-8 LB
TRANSPORT SECTION
Synchronizing Roller Clutch
CL1
CN31
Paper Transport Clutch
CL2
CN30
Suction Fan Motor
M4
CN32
CN1HV1
GND
DC24V
Grid Voltage
P.C./I.T. Grid #2
P.S. #1
HV1
High Voltage Unit
Paper Leading Edge Detecting Sensor
PC54
PJ9
CN25
Transport Roller Sensor
PC51
PJ10
PJ1H
PWB-H
AE Sensor Board
OPTICAL SECTION
CN46
CN45
PWP-P
Control Panel
PJ1P
PJ2P
Size Reset Switch
S108
CN43
Fuse
LA1
Exposure Lamp
TUBE
100V AREA
200V AREA
METRIC AREA
23cpm copier
Optical Section Cooling Fan Motor
M3
CN44
15/18cpm copier
UN2
Original Size Detecting Board
PJ55UN2
PJ56UN2
PJ57UN2
PJ58UN2
Original Size Detecting Sensor CD2 (Option)
PC116
PJ43
Original Size Detecting Sensor FD3 (Option)
PC115
PJ42
Original Size Detecting Sensor FD2 (MC Option)
PC113
PJ19
Original Size Detecting Sensor CD1 (MC Option)
PC114
PJ20
Mirror Motor
M7
PJ22
Lens Motor
M6
PJ21
PJ4E
PWB-E
Motor Drive Board
PJ2E
PJ3E
Scanner Motor
M5
PJ1E
PJ5F
PJ4F
PWB-F
Motor Drive Board
PJ2F
PJ3F
PJ1F

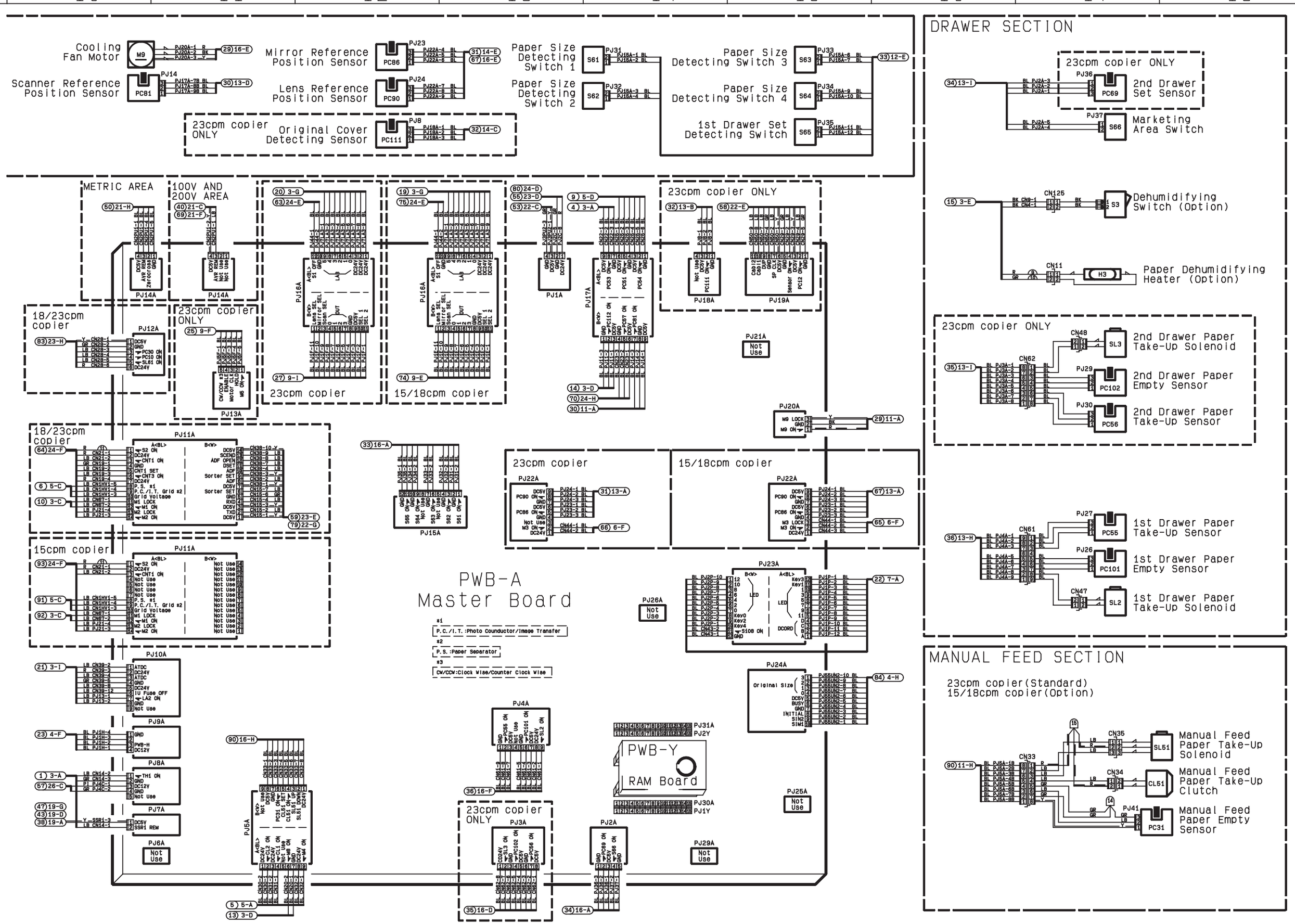
Cooling Fan Motor
M9
Scanner Reference Position Sensor
PC81
Mirror Reference Position Sensor
PC86
Lens Reference Position Sensor
PC90
Paper Size Detecting Switch 1
S61
Paper Size Detecting Switch 2
S62
Paper Size Detecting Switch 3
S63
Paper Size Detecting Switch 4
S64
1st Drawer Set Detecting Switch
S65
23cpm copier ONLY
Original Cover Detecting Sensor
PC111
METRIC AREA
100V AND 200V AREA
18/23cpm copier
23cpm copier ONLY
23cpm copier
15/18cpm copier
15cpm copier
PWB-A
Master Board
PWB-Y
RAM Board
Not Use
DRAWER SECTION
2nd Drawer Set Sensor
PC69
Marketing Area Switch
S66
Dehumidifying Switch (Option)
S3
Paper Dehumidifying Heater (Option)
H3
2nd Drawer Paper Take-Up Solenoid
SL3
2nd Drawer Paper Empty Sensor
PC102
2nd Drawer Paper Take-Up Sensor
PC56
1st Drawer Paper Take-Up Sensor
PC55
1st Drawer Paper Empty Sensor
PC101
1st Drawer Paper Take-Up Solenoid
SL2
MANUAL FEED SECTION
23cpm copier(Standard)
15/18cpm copier(Option)
Manual Feed Paper Take-Up Solenoid
SL51
Manual Feed Paper Take-Up Clutch
CL51
Manual Feed Paper Empty Sensor
PC31
*1
P.C./I.T. :Photo Counductor/Image Transfer
*2
P.S. :Paper Separator
*3
CW/CCW:Clock Wise/Counter Clock Wise

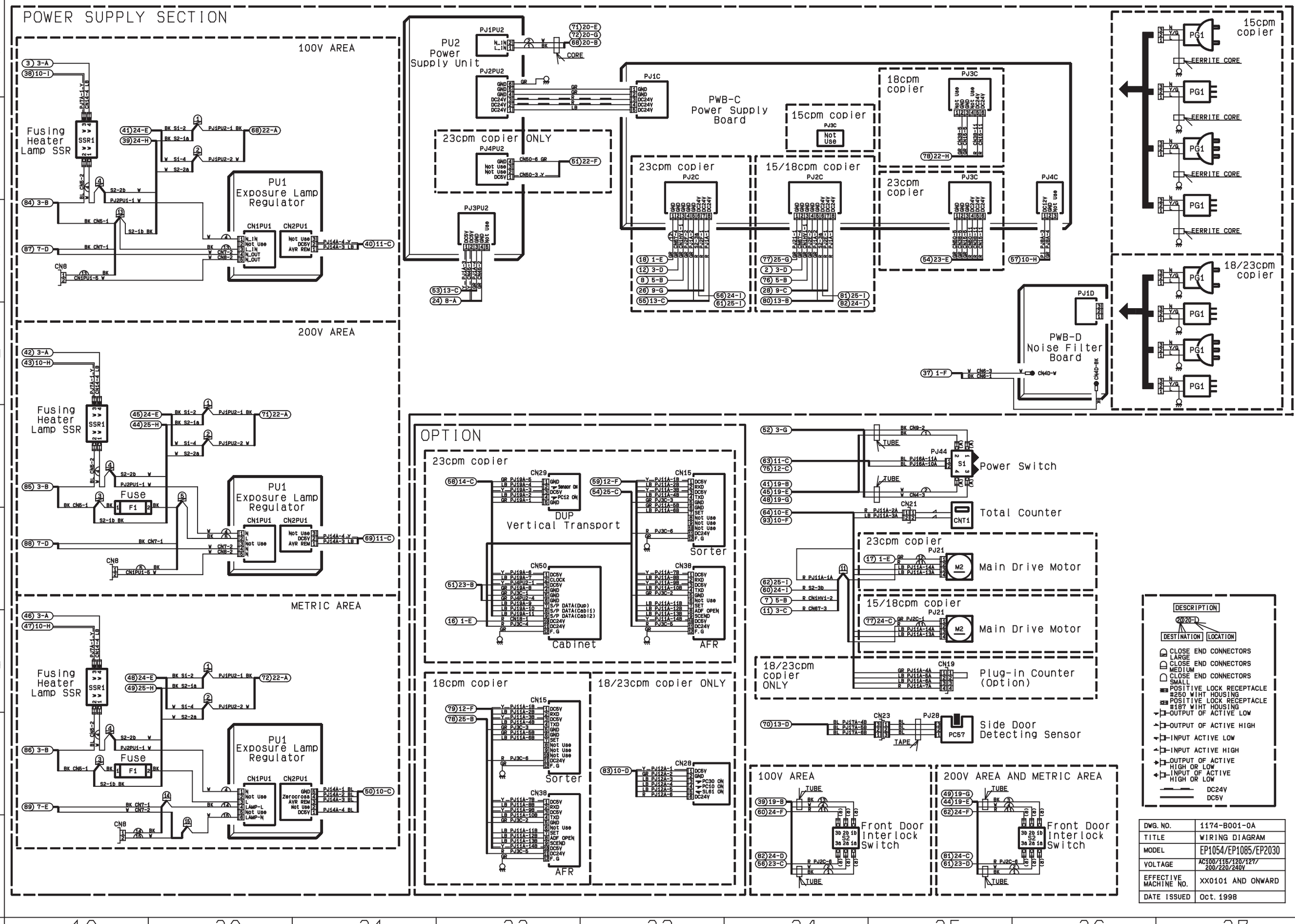

DWG. NO.	1174-B001-0A
TITLE	WIRING DIAGRAM
MODEL	EP1054/EP1085/EP2030
VOLTAGE	AC100/110/120/127/ 200/220/240V
EFFECTIVE MACHINE NO.	XX0101 AND ONWARD
DATE ISSUED	Oct. 1998

L
FG
N
F1D
C1D
L1D
C2D
C3D
C4D
JP1D
R1D
R2D
S1
S2
S1 OFF
F1
TS1
H1
SSR1
FT2
PU1
LA1
DC5V-A
AVR(PWM)
H1 REM
GND2
*1
I. T. :Image Transfer
*2
P. C. :Photo Conductor
*3
P. S. :Paper Separator
*4
P. S. /D. B. :Paper Separator/Developing Bias
*5
P. C. /I. T. :Photo Conductor/Image Transfer
DC5V-A
DC5V
PWB-P
GND1
18枚機/18cpm copier
国内:オプション
Others Area:Standard
Except Others
Area:Option
国内標準
Metric Area:Standard
Inch Area:Option
FD3
CD2
FD2
CD1
PC115
PC116
PC113
PC114
UN2
PWB-F
PWB-E
PWB-Y
PWB-A
M5
M6
M7
DC24V
スキャナー用/
Scanner
GND2
S3
除湿用トランス/
Transformer
T1
F5
H3
H2
キャビネット/
Cabinet
18枚機/18cpm copier
国内標準
ペーパー除湿ヒーターキット/
Option(Except Japan Areas)
Paper Dehumidifying
Heater Kit
N
L
DC5V
GND
DC24V
S2
S2 ON
Q12A
D1C
IC1C
DC12V
GND3
C1C
C2C
C3C
C4C
S61
S62
S63
S64
S65
S66
S108
1
2
3
4
5
F1C
F2C
F3C
ADF
ソーター/Sorter
15/18枚機/
18cpm copier
キャビネット/Cabinet
18枚機/
18cpm copier
スキャナー用/Scanner
F4C
TN1 TN2
HV1
I. T. CH *1
P. C. CH *2
P. S. CH *3
R1
M1
M2
LOCK
P. S. /D. B. REM *4
P. C. /I. T. Grid REM *5
TN1:Seal Bias
(Japan Area and
Others Areas Only)
TN2:Developing Bias
転写ガイド抵抗/
Pre-Synch Guide
Plate Resistor
R1
VS1
18枚機/18cpm copier:標準/Standard
15枚機/15cpm copier:オプション/Option
Except TAIWAN Area
23枚機/23cpm copier:オプション/Option
PU2
PWB-A
M3
M4
M8
M9
LA2
SL2
SL3
CL1
CL2
CL51
SL51
SR
DOWN
UP
F4
I/U Fuse
UN3
PWB-H
LA3
DC24V
15/18枚機/
18cpm copier
ONLY(Option)
CNT2
CNT
CNT1
SET
DC24V-A
GND1
キャビネット/
For Cabinet
PC81
PC90
PC86
PC54
PC51
PC101
PC102
PC53
PC69
PC112
PC57
PC111
PC56
PC55
PC31
TH1 R5A
18枚機/18cpm copier:標準/Standard
15枚機/15cpm copier:オプション/Option
Except TAIWAN Area
23枚機/23cpm copier:オプション/Option

CL1	タイミングローラークラッチ	Synchronizing Roller Clutch
CL2	中間ローラークラッチ	Paper Transport Clutch
CL51	手差し給紙クラッチ	Manual Feed Paper Take-Up Clutch
CNT1	トータルカウンター	Total Counter
CNT3	キーカウンター(オプション)	Plug-In Counter(Option)
H1	定着ヒーターランプ	Fusing Heater Lamp
H2	ドラム除湿ヒーター	Drum Dehumidifying Heater(Option)
H3	ペーパー除湿ヒーター	Paper Dehumidifying Heater(Option)
HV1	高圧ユニット	High Voltage Unit
LA1	露光ランプ	Exposure Lamp
LA2	メインイレーサー	Main Erase Lamp
LA3	イメージイレーサー	Image Erase Lamp
M1	PC駆動モーター	PC Drive Motor
M2	メインモーター	Main Drive Motor
M3	光学冷却ファンモーター	Optical Section Cooling Fan Motor
M4	サクションファンモーター	Suction Fan Motor
M5	スキャナーモーター	Scanner Motor
M6	レンズモーター	Lens Motor
M7	ミラーモーター	Mirror Motor
M8	トナー補給モーター	Toner Replenishing Motor
M9	機内冷却ファンモーター	Cooling Fan Motor
PC31	手差しペーパー検出センサー	Manual Feed Paper Empty Sensor
PC51	中間ローラー前センサー	Transport Roller Sensor
PC53	第1排紙センサー	1st Paper Exit Sensor
PC54	ペーパー先端検出センサー	Paper Leading Edge Detecting Sensor
PC55	第1トレイ給紙センサー	1st Drawer Paper Take-Up Sensor
PC56	第2トレイ給紙センサー	2nd Drawer Paper Take-Up Sensor
PC57	右ドアセットセンサー	Side Door Detecting Sensor
PC69	第2トレイセットセンサー	2nd Drawer Set Sensor
PC81	スキャナー基準位置センサー	Scanner Reference Position Sensor
PC86	ミラー基準位置センサー	Mirror Reference Position Sensor
PC90	レンズ基準位置センサー	Lens Reference Position Sensor
PC101	第1トレイペーパーエンプティセンサー	1st Drawer Paper Empty Sensor
PC102	第2トレイペーパーエンプティセンサー	2nd Drawer Paper Empty Sensor
PC111	原稿カバー検出センサー	Original Cover Detecting Sensor
PC112	トナーホッパー定位置検出センサー	Toner Hopper Home Position Sensor
PC113	原稿サイズ検出センサーFD2	Original Size Detecting Sensor FD2(Inch Areas Option)
PC114	原稿サイズ検出センサーCD1	Original Size Detecting Sensor CD1(Inch Areas Option)
PC115	原稿サイズ検出センサーFD3(オプション)	Original Size Detecting Sensor FD3(Option)
PC116	原稿サイズ検出センサーCD2(オプション)	Original Size Detecting Sensor CD2(Option)
PU1	電源ユニット	Power Supply Unit
PU2	DC電源ユニット	DC Power Supply Unit
PWB-A	マスター基板	Master Board
PWB-C	電源基板	Power Supply Board
PWB-D	ノイズフィルター基板	Noise Filter Board
PWB-E※	スキャナードライブ基板	Scanner Drive Board
PWB-F※	スキャナードライブ基板	Scanner Drive Board
PWB-H	EE基板	AE Sensor Board
PWB-P	操作パネル	Control Panel
PWB-Y	RAM基板	RAM Board
S1	メインスイッチ	Power Switch
S2	前ドア安全スイッチ	Front Door Interlock Switch
S3	除湿スイッチ	Dehumidifying Switch(Option)
S61	ペーパーサイズ検出スイッチ1	Paper Size Detecting Switch1
S62	ペーパーサイズ検出スイッチ2	Paper Size Detecting Switch2
S63	ペーパーサイズ検出スイッチ3	Paper Size Detecting Switch3
S64	ペーパーサイズ検出スイッチ4	Paper Size Detecting Switch4
S65	第1トレイセット検出スイッチ	1st Drawer Set Detecting Switch
S66	インチ/メトリック切替スイッチ	Marketing Area Switch
S108	サイズリセットスイッチ	Size Reset Switch
SL2	第1給紙ソレノイド	1st Drawer Paper Take-Up Solenoid
SL51	手差しピックアップソレノイド	Manual Feed Paper Take-Up Solenoid
SSR1	定着ヒーター用SSR	Fusing Heater Lamp SSR
TH1	定着サーミスタ	Fusing Thermistor
TS1	定着サーマルスイッチ	Fusing Thermoswitch
UN2	原稿サイズ検出基板	Original Size Detecting Board (Inch Areas:Option Metric Areas:Standard)
UN3	ATDCセンサー	ATDC Sensor
VS1	ガイド用バリスタ	Guide Plate Varistor

※

国内(Japan Area)			海外(Except Japan Area)		
15枚機	18枚機	23枚機	15cpm copier	18cpm copier	23cpm copier
PWB-E		PWB-F	PWB-E		PWB-F

DWG. NO.	1174-C101-0A
TITLE	CIRCUIT DIAGRAM
MODEL	EP1053/EP1084/EP2030 EP1054/EP1085/EP2030
VOLTAGE	AC100/115/120/127/ 200/220/240V
EFFECTIVE MACHINE NO.	XX0101 AND ONWARD
DATE ISSUED	Oct. 1998

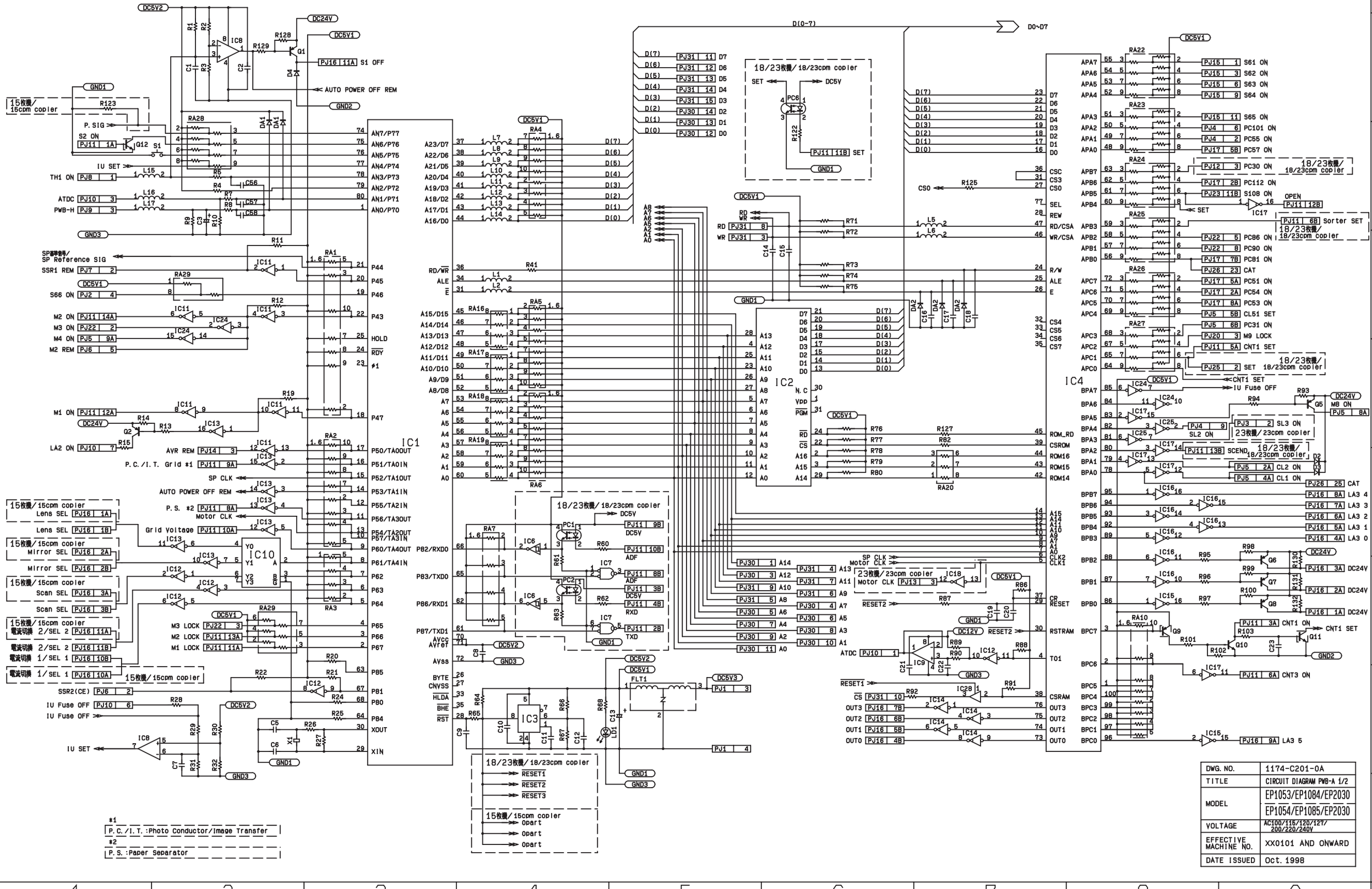

DWG. NO.	1174-C201-0A
TITLE	CIRCUIT DIAGRAM PWB-A 1/2
MODEL	EP1053/EP1084/EP2030 EP1054/EP1085/EP2030
VOLTAGE	AC100/115/120/127/ 200/220/240V
EFFECTIVE MACHINE NO.	XX0101 AND ONWARD
DATE ISSUED	Oct. 1998

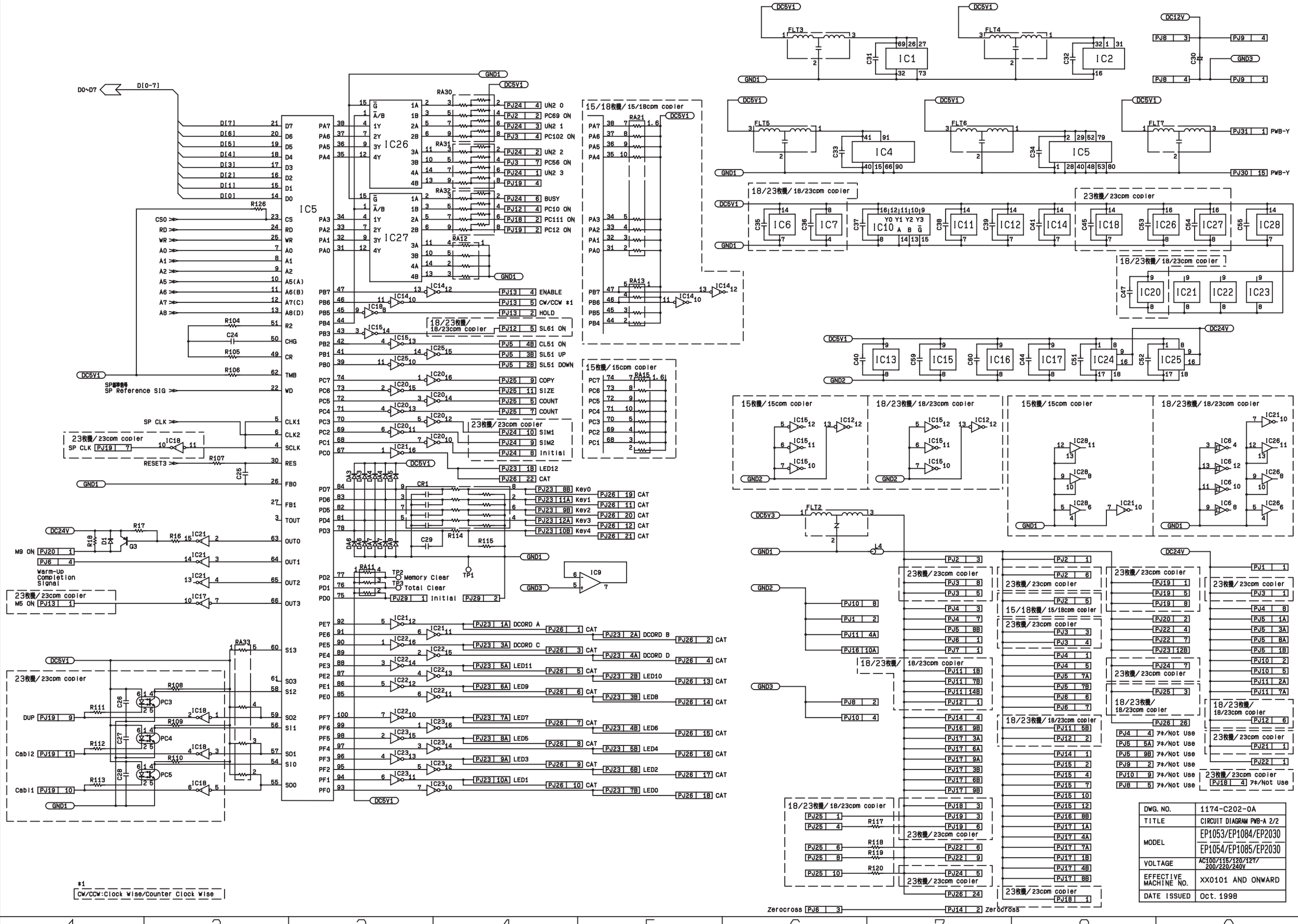

DWG. NO.	1174-C202-0A
TITLE	CIRCUIT DIAGRAM PWB-A 2/2
MODEL	EP1053/EP1084/EP2030 EP1054/EP1085/EP2030
VOLTAGE	AC100/115/120/127/200/220/240V
EFFECTIVE MACHINE NO.	XX0101 AND ONWARD
DATE ISSUED	Oct. 1998

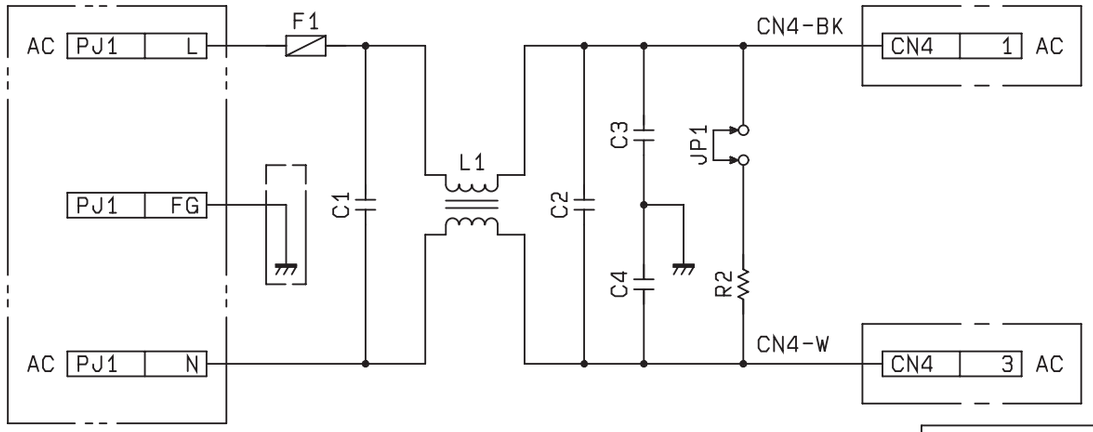

基板内回路図 CIRCUIT DIAGRAM	
名称 NAME	PWB-D(100V Area)

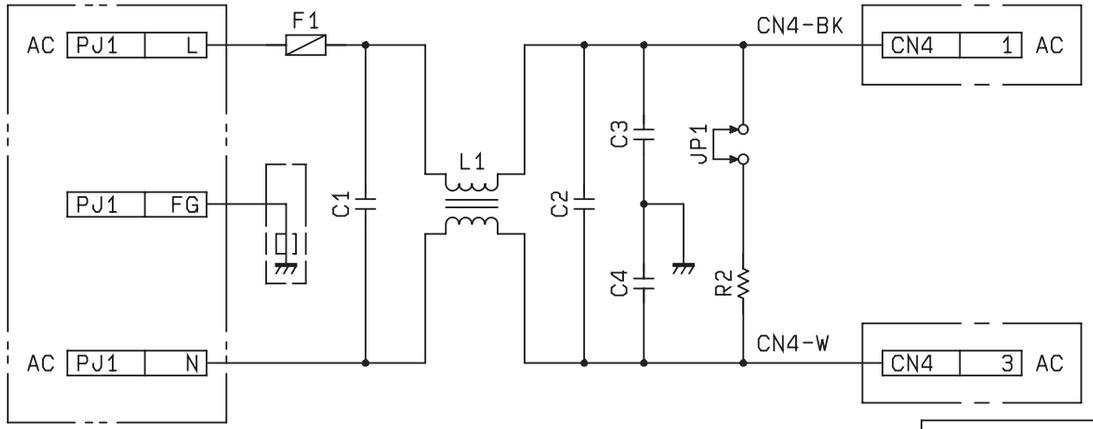

基板内回路図 CIRCUIT DIAGRAM	
名称 NAME	PWB-D(115V Area)

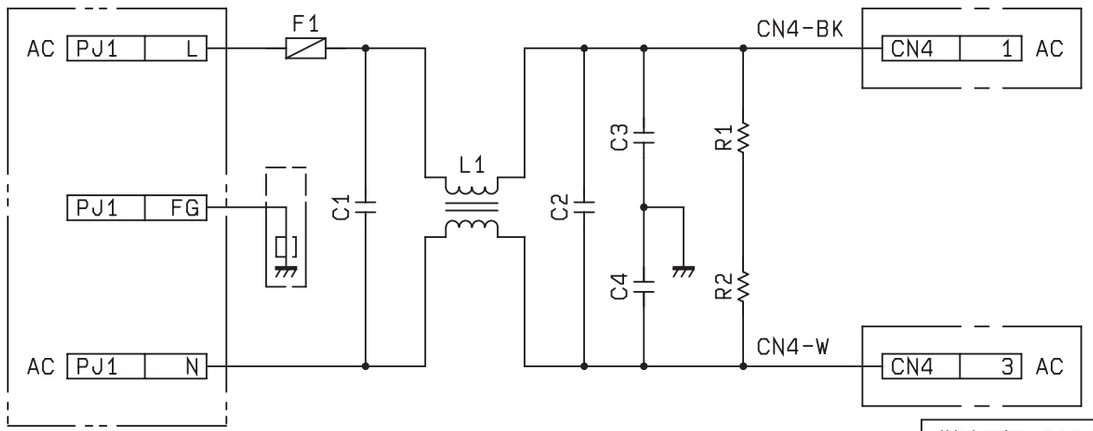

基板内回路図 CIRCUIT DIAGRAM	
名称 NAME	PWB-D(200V Area)

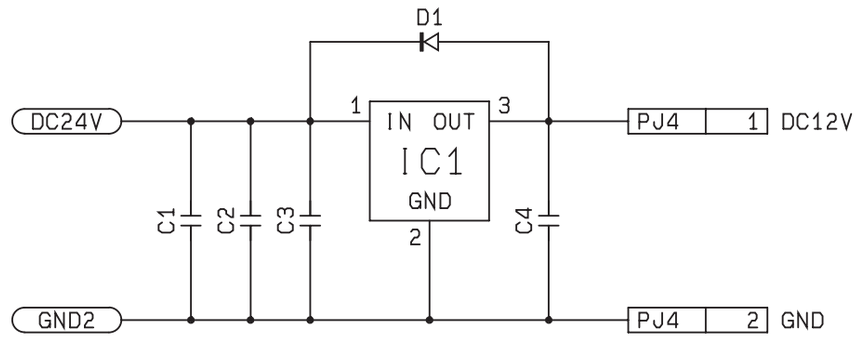

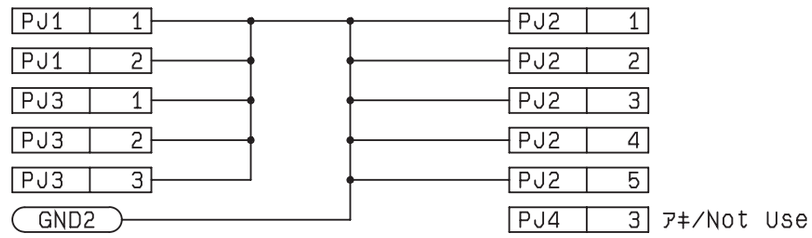

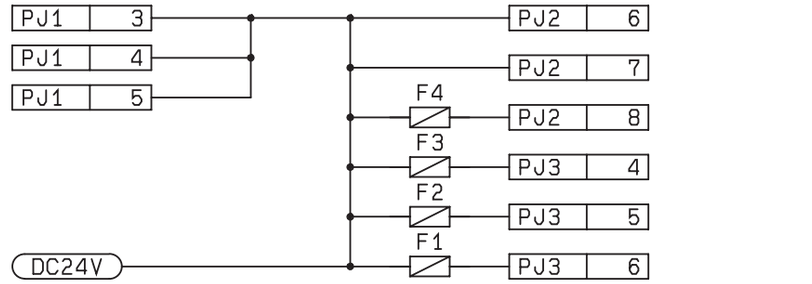

基板内回路図 CIRCUIT DIAGRAM	
名称 NAME	PWB-C

DWG. NO.	1174-C203-0A
TITLE	CIRCUIT DIAGRAM PWB-C.D
MODEL	EP1053/EP1084/EP2030 EP1054/EP1085/EP2030
VOLTAGE	AC100/115/120/127/ 200/220/240V
EFFECTIVE MACHINE NO.	XX0101 AND ONWARD
DATE ISSUED	Oct. 1998

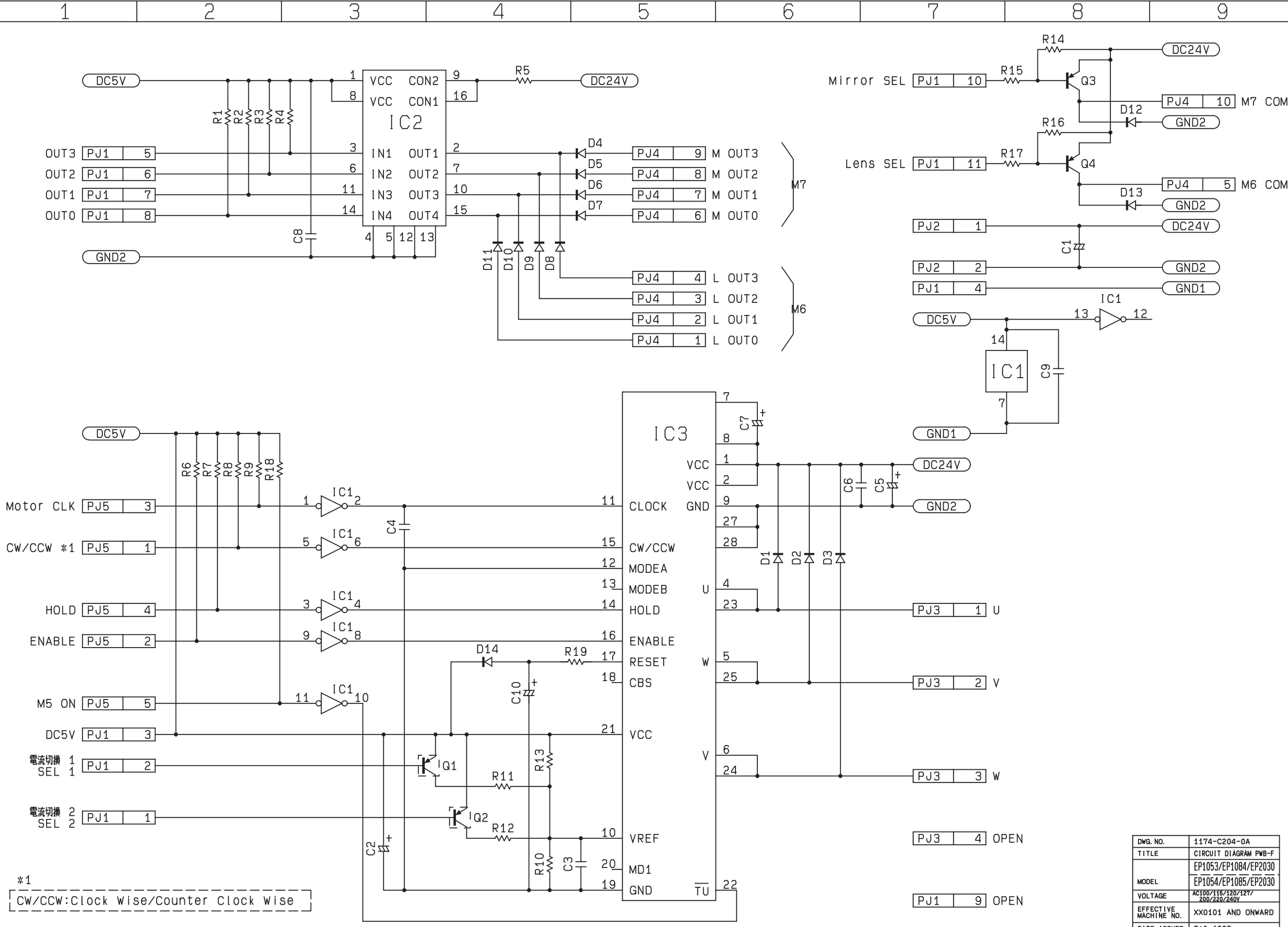

DWG. NO.	1174-C204-0A
TITLE	CIRCUIT DIAGRAM PWB-F
MODEL	EP1053/EP1084/EP2030 EP1054/EP1085/EP2030
VOLTAGE	AC100/115/120/127/ 200/220/240V
EFFECTIVE MACHINE NO.	XX0101 AND ONWARD
DATE ISSUED	Oct. 1998