EP1054/EP1085/EP2030

MECHANICAL/ ELECTRICAL

I

MINOLTA

COTNENTS

I. CROSS-SECTIONAL VIEW ..... M-I
I-1. Cross-Sectional View of 23 cpm Copier ..... M-I
I-2. Cross-Sectional View of I8 cpm Copier M-2
I-3. Cross-Sectional View of 15 cpm Copier M-3
2. COPY PROCESS M-4
3. DRIVE SYSTEM M-6
4. SEQUENTIAL EXPLANATION M-7
5. IMAGING UNIT M-12
5-I. Imaging Unit Drive M-13
5-2. Imaging Unit Toner Recycling ..... M-I 4
5-3. Imaging Unit Fuse M-14
6. PC DRUM M-15
7. DRUM CHARGING M-16
8. IMAGE ERASE LAMP M-17
9. OPTICAL SECTION M-20
9-I. Exposure Lamp M-21
9-2. AE Sensor M-22
9-3. Lamp Reflectors M-23
9-4. Aperture Plates M-23
9-5. Scanner and 2nd/3rd Mirror Carriage Movement M-24
9-6. 4th Mirror Movement M-26
9-7. Lens Movement M-27
IO. ORIGINAL SIZE DETECTING SENSORS (23 cpm COPIER ONLY) M-28
1 O-I. Original Size Detecting Sensors M-28
1 O-2. Original Size Detecting Operation M-28
I O-3. Sensor Locations M-29
1 O-4. Size Detection M-30
1 O-5. Original Size Detection Timing M-31
I O-6. Original Cover Angle Detection (23 cpm Copier Only) M-32
11. DEVELOPMENT M-33
11-1. ATDC Sensor M-34
I I-2. Magnet Roller M-36
I I-3. Developing Bias M-37
I I-4. Doctor Blade M-38
1 I-5. Sleeve/Magnet Roller Lower Filter M-38
12. TONER HOPPER M-39
12-I. Toner Hopper Locking/Unlocking M-39
12-2. Toner Replenishing M-39
12-3. Shutter M-40
12-4. Toner Hopper Home Position Detection M-40
12-5. Toner Bottle Vibration M-41
12-6. Toner Replenishing Control M-42
13. PAPER TAKE-UP/FEED SECTION (2ND DRAWER: 23 cpm COPIER ONLY) M-43
13-I .Edge Guide and Trailing Edge Stop M-44
13-2.Drawer Positioning M-45

13-3.Paper Lifting Plate M-45
13-4.Drawer-in-Position Detection M-46
13-5.Universal Tray (1 st Drawer) Paper Size Detection M-47
13-6.Paper Empty Detection M-40
13-7.Paper Separating Mechanism M-49
13-8.Paper Take-Up Roll M-50
13-9.Paper Take-Up Retry Control M-51
13-10.VERTICAL PAPER TRANSPORT M-52
14. MULTI BYPASS TABLE M-53
14-1 .Paper Take-Up Mechanism M-54
14-2.Paper Take-Up Retry Control M-55
14-3.Paper Separating Mechanism M-56
14-4.Paper Empty Detection M-56
15. SYNCHRONIZING ROLLERS M-57
15-I .Upper Synchronizing Roller Positioning M-58
15-2.Paper Dust Remover M-58
15-3.Synchronizing Roller Control M-59
16. IMAGE TRANSFER AND PAPER SEPARATION M-60
17. MAIN ERASE LAMP M-62
18. PAPER SEPARATOR FINGERS M-63
19. CLEANING UNIT M-64
19-I .Cleaning Bias M-65
20. PAPER TRANSPORT M-66
21. FUSING UNIT M-67
21-1. Fusing Temperature Control M-68
21-2.Fusing Rollers Pressure Mechanism M-69
21-3.Cleaning Roller M-69
22. EXIT UNIT M-70
22-I .Upper/Lower Separator Fingers M-70
22-2.Paper Exit Sensor M-71
23. EXIT/DUPLEX SWITCHING UNIT (OPTION) M-72
24. DEHUMIDIFYING SWITCH (OPTION) M-73
25. COOLING FAN M-74
26. OPTICAL SECTION COOLING FAN M-75
27. MEMORY BACKUP M-76

1174SBM0100A

1 CROSS-SECTIONAL VIEW

1174SBM0101A

1-1. Cross-Sectional View of 23 cpm Copier

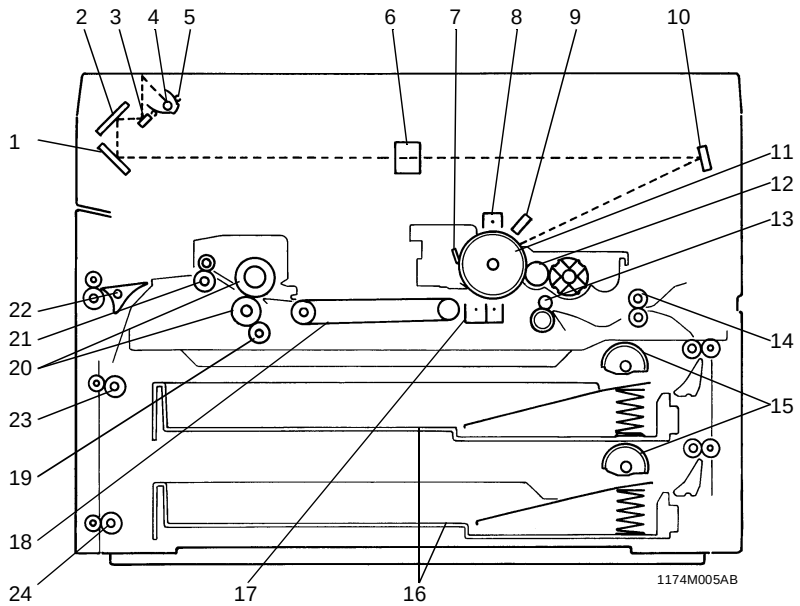

1. 3rd Mirror
2. 2nd Mirror
3. 1st Mirror
4. Exposure Lamp
5. Lamp Reflector
6. Lens
7. Cleaning Blade
8. PC Drum Charge Corona
9. Image Erase Lamp
10. 4th Mirror
11. PC Drum
12. Sleeve/Magnet Roller
13. Synchronizing Roller
14. Transport Roller
15. 1st/2nd Drawer Paper Take-Up Roll
16. 1st/2nd Drawer
17. Image Transfer/Paper Separator Coronas
18. Suction Unit
19. Cleaning Roller
20. Upper/Lower Fusing Roller
21. Paper Exit Roller
22. Exit/Duplex Switching Guide (for optional Duplex Unit and Sorter)
23. Duplex Unit Vertical Transport Roller 1 (for optional Duplex Unit)
24. Duplex Unit Vertical Transport Roller 2 (for optional Duplex Unit)

1174SBM0102A

1-2. Cross-Sectional View of 18 cpm Copier

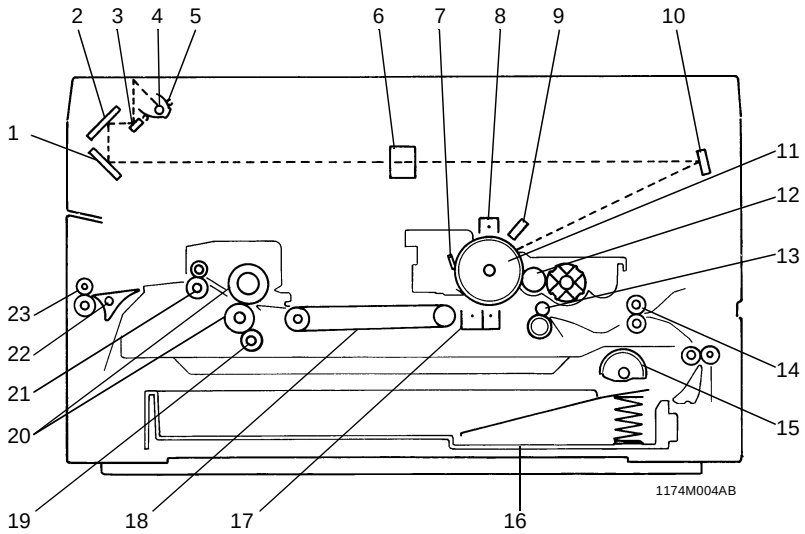

1. 3rd Mirror
2. 2nd Mirror
3. 1st Mirror
4. Exposure Lamp
5. Lamp Reflector
6. Lens
7. Cleaning Blade
8. PC Drum Charge Corona
9. Image Erase Lamp
10. 4th Mirror
11. PC Drum
12. Sleeve/Magnet Roller
13. Synchronizing Roller
14. Transport Roller
15. Paper Take-Up Roll
16. Drawe
17. Image Transfer/Paper Separator Coronas
18. Suction Unit
19. Cleaning Roller
20. Upper/Lower Fusing Roller
21. Paper Exit Roller
22. Exit/Duplex Switching Guide (for optional Sorter)
23. Paper Exit Roller in Exit/Duplex Switching Guide Unit (for optional Sorter)

1174SBM0103A

1-3. Cross-Sectional View of 15 cpm Copier

✻ Except U.S.A., Canada

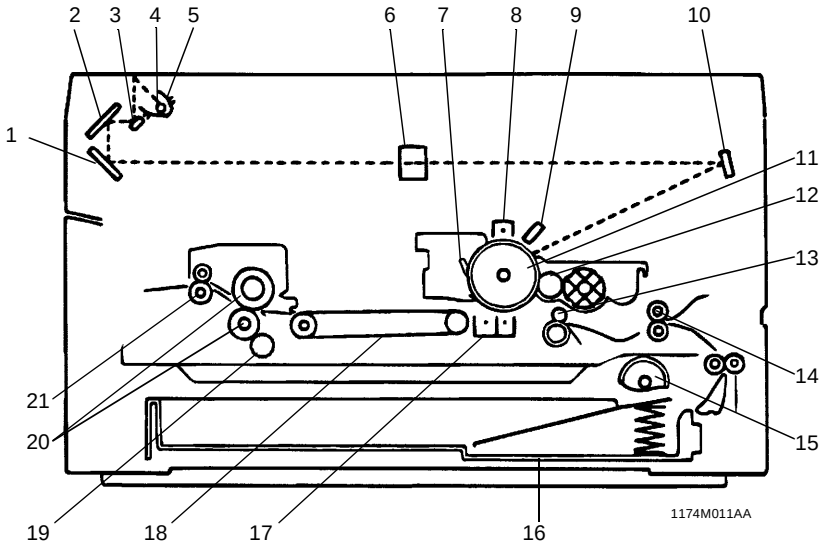

1. 3rd Mirror
2. 2nd Mirror
3. 1st Mirror
4. Exposure Lamp
5. Lamp Reflector
6. Lens
7. Cleaning Blade
8. PC Drum Charge Corona
9. Image Erase Lamp
10. 4th Mirror
11. PC Drum
12. Sleeve/Magnet Roller
13. Synchronizing Roller
14. Transport Roller
15. Paper Take-Up Roll
16. Drawer
17. Image Transfer/Paper Separator Coronas
18. Suction Unit
19. Cleaning Roller
20. Upper/Lower Fusing Roller
21. Paper Exit Roller

1174SBM0200A

2 COPY PROCESS

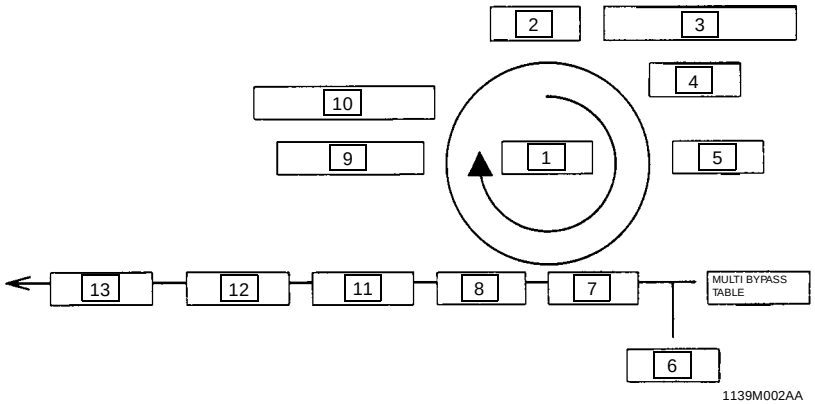

1139M002AA

1. PC DRUM
2. DRUM CHARGING
3. IMAGE ERASE
4. EXPOSURE
5. DEVELOPING
6. PAPER FEEDING
7. IMAGE TRANSFER
8. PAPER SEPARATION
9. CLEANING
10. MAIN ERASE
11. TRANSPORT
12. FUSING
13. PAPER EXIT

1. PC Drum The PC Drum is an aluminum cylinder coated with a photosensitive semiconductor. It is used as the medium on which a visible developed image of the original is formed. (For more details, see “6. PC DRUM”.)
2. Drum Charging The PC Drum Charge Corona Unit is equipped with a Comb Electrode and a Scorotron Grid to deposit a uniform negative charge across the entire surface of the PC Drum. (For more details, see “7. DRUM CHARGING”.)
3. Image Erase Any areas of charge which are not to be developed are neutralized by lighting up LEDs. (For more details, see “8. IMAGE ERASE LAMP”.)
4. Exposure Light from the Exposure Lamp reflected off the original is guided to the surface of the PC Drum and reduces the level of the negative charges, thereby forming an electrostatic latent image. (For more details, see “9. OPTICAL SECTION”.)
5. Developing Toner positively charged in the Developer Mixing Chamber is attracted onto the electrostatic latent image changing it to a visible, developed image. A DC negative bias voltage is applied to the Sleeve/Magnet Roller to prevent toner from being attracted onto those areas of the PC Drum which correspond to the background areas of the original. (For more details, see “11. DEVELOPMENT”.)

6. Paper Feeding Paper is fed either automatically from the 1st or 2nd Drawer, or manually via the Multi Bypass Table or Manual Bypass Table. Each Drawer has fingers that function to separate the top sheet of paper from the rest at take-up. (2nd Drawer: 23 cpm Copier Only) (For more details, see “13. PAPER TAKE-UP/FEED SECTION”.)
7. Image Transfer The single-wire Image Transfer Corona Unit applies a DC negative corona emission to the underside of the paper, thereby attracting toner onto the surface of the paper. (For more details, see “16. IMAGE TRANSFER AND PAPER SEPARATION”.)
8. Paper Separation The single-wire Paper Separator Corona Unit applies an AC corona emission to the underside of the paper to neutralize the paper. In addition, mechanical paper separation is provided by the two PC Drum Paper Separator Fingers fitted to the Imaging Unit. (For more details, see “16. IMAGE TRANSFER AND PAPER SEPARATION”.)
9. Cleaning Residual toner on the surface of the PC Drum is scraped off by the Cleaning Blade. (For more details, see “19. CLEANING UNIT”.)
10. Main Erase Light from the Main Erase Lamp neutralizes any surface potential remaining on the surface of the PC Drum after cleaning. (For more details, see “17. MAIN ERASE LAMP”.)
11. Transport The paper is fed to the Fusing Unit by the Suction Belts. (For more details, see “20. PAPER TRANSPORT”.)
12. Fusing The developed image is permanently fused to the paper by a combination of heat and pressure applied by the Upper and Lower Fusing Rollers. (For more details, see “21. FUSING UNIT”.)
13. Paper Exit After the fusing process the paper is fed out by the Paper Exit Roller onto the Copy Tray. (For more details, see “22. EXIT UNIT”.)

1174SBM0300A

3 DRIVE SYSTEM

This copier is equipped with two main drive motors, the PC Drive Motor that drives the upper half of the copier (Imaging Unit) and the Main Drive Motor which gives drive for the lower half of the copier (paper take-up/feeding, transport mechanism and Fusing Unit). Each has its own drive transmitting gears and timing belts as illustrated below.

Drive Train for Lower Half of Copier

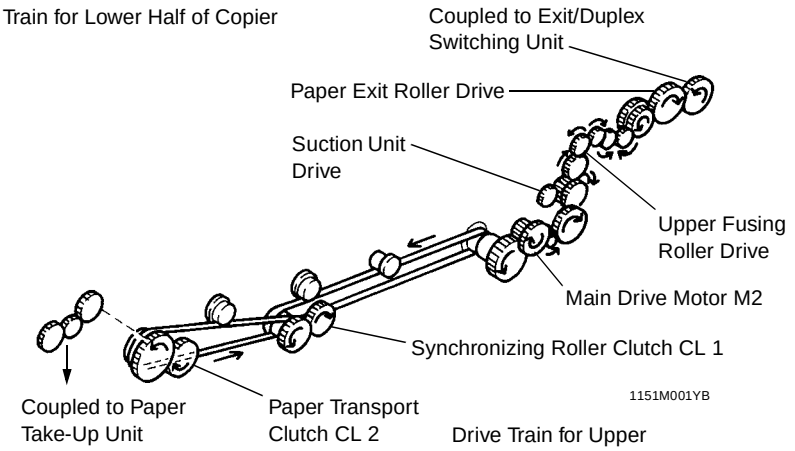

Drive Train for Upper Half of Copier

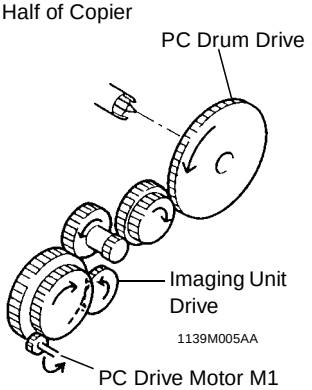

Drive Train for Paper Take-Up Unit <23 cpm Copier>

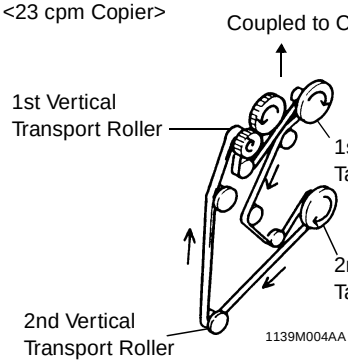

<15/18 cpm Copier>

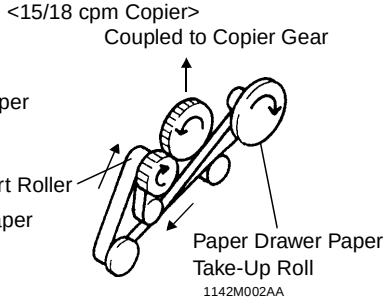

1174SBM0400A

4 SEQUENTIAL EXPLANATION

✻ Numbers given in rectangles ☐ in the following flowchart are timer values in seconds.

A The power cord is plugged into the outlet.

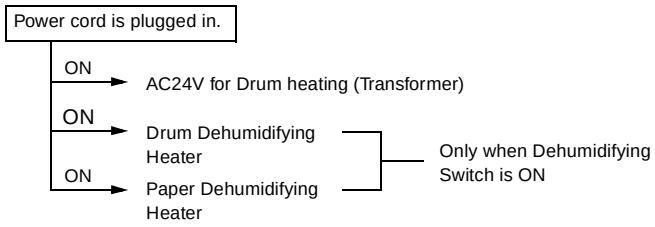

B Power Switch is turned ON.

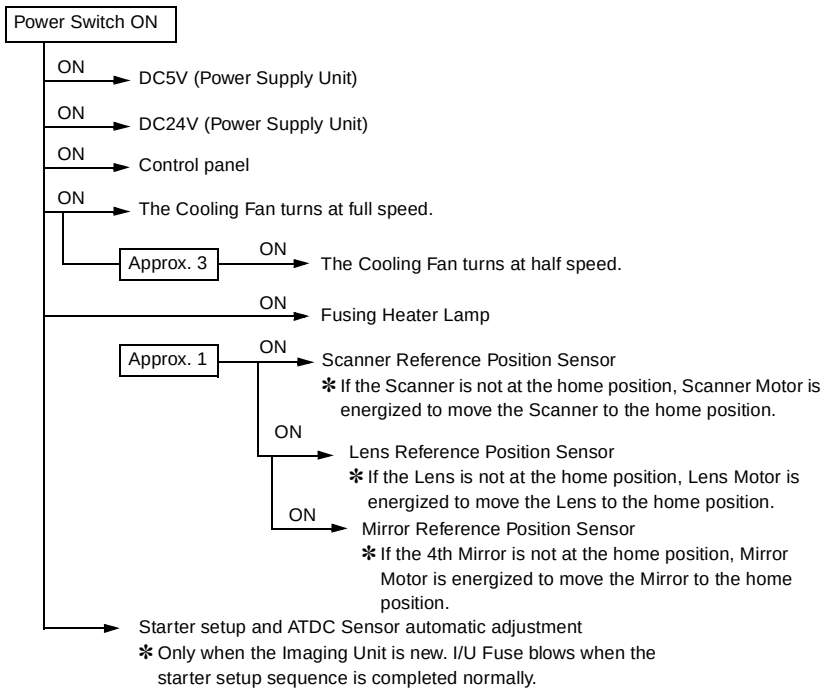

C	The Fusing Unit temperature reaches 205°C.

Fusing Thermistor detects 205°C.

ON/OFF → Fusing Heater Lamp

✻ The Fusing Unit temperature control is started.

D The Start Key is pressed.

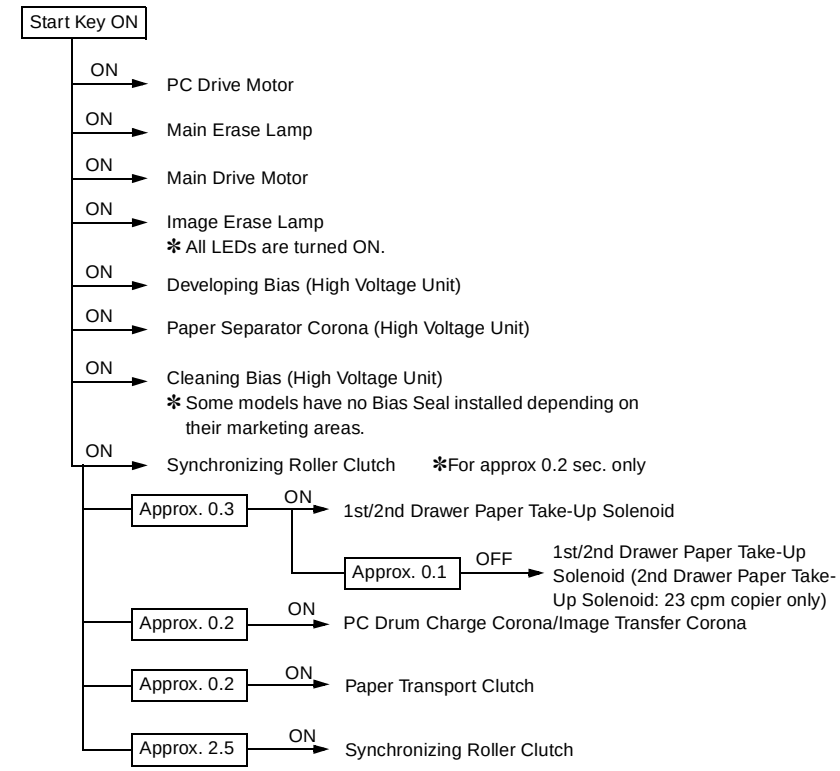

E Paper is taken up.

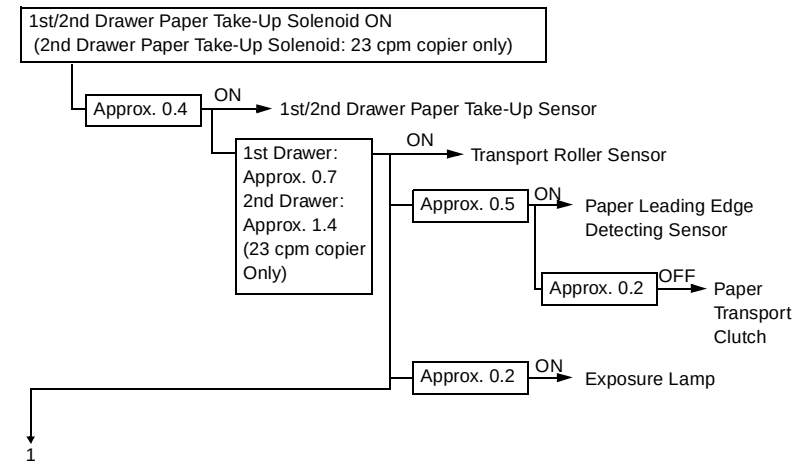

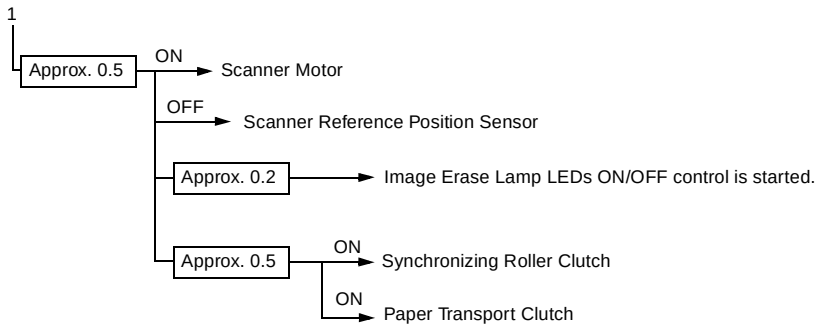

F | A scan motion is completed.

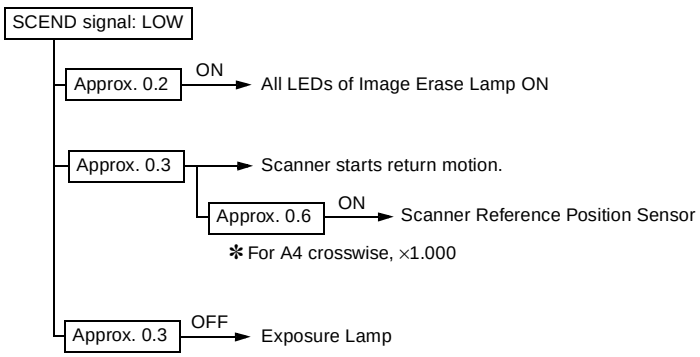

G The last paper moves past Transport Roller Sensor.

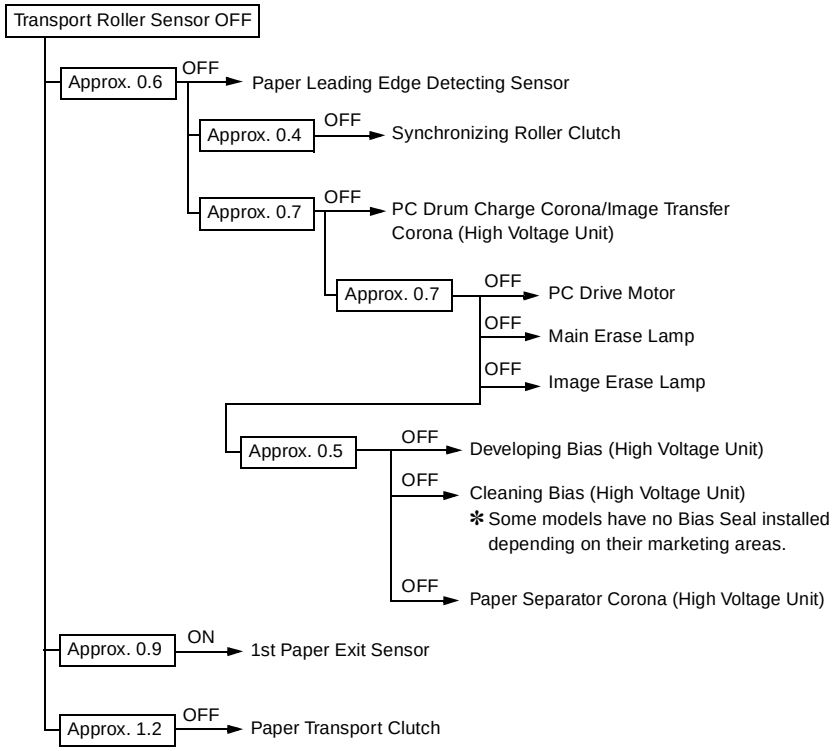

H The paper moves past 1st Paper Exit Sensor.

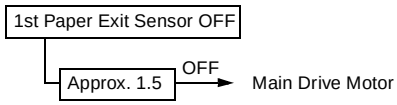

1174SBM0500A

5 IMAGING UNIT

This copier is equipped with an Imaging Unit, or IU, which integrates a PC Drum, PC Drum Charge Corona, Developing Unit, Cleaning Unit, and Toner Recycling mechanism into one assembly. The Unit also includes the Upper Synchronizing Roller which facilitates clearing of a paper misfeed.

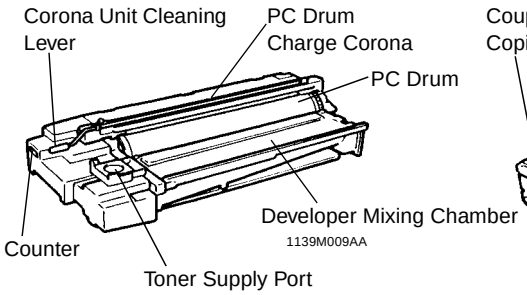

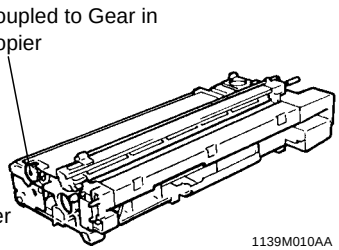

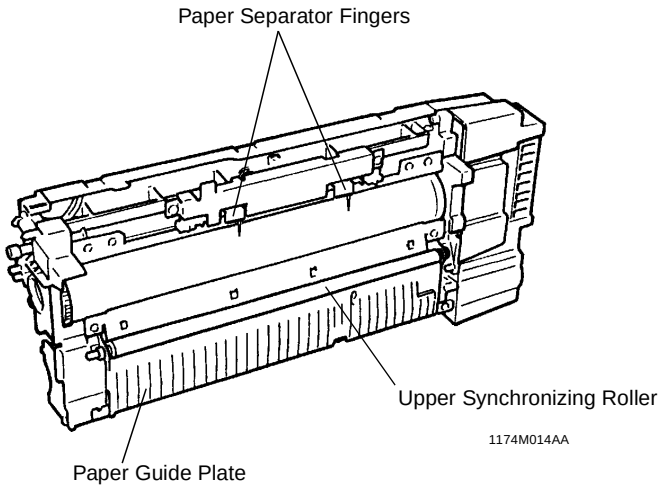

1174SBM0501A

5-1. Imaging Unit Drive

Drive for the Imaging Unit is transmitted by one of the gears on the Unit.
This particular gear is in mesh with the Imaging Unit Drive Gear in the copier.

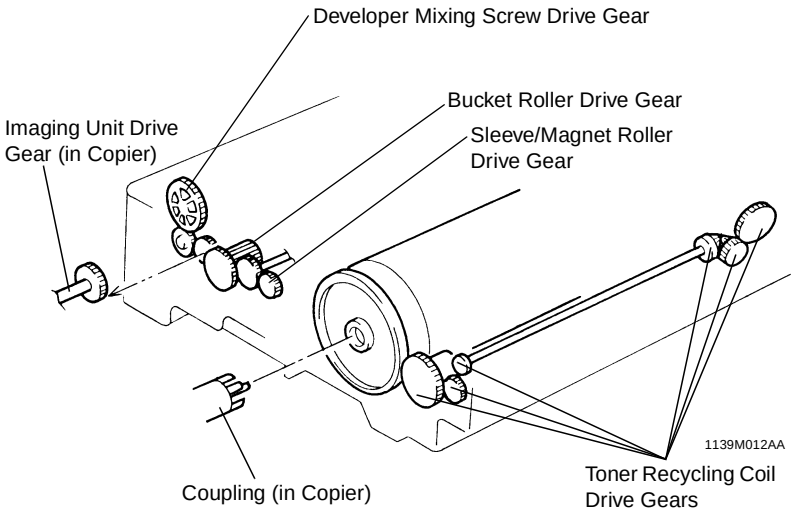

1174SBM0502A

5-2. Imaging Unit Toner Recycling

The copier is provided with a toner recycling mechanism. The toner, which has been scraped off the surface of the PC Drum by the Cleaning Blade and collected in the Cleaning Unit, is conveyed by the two Toner Recycling Coils to the Toner Supply Port and, from there, it is returned back to the Developer Mixing Chamber of the Developing Unit.

One of the gears of the Toner Recycling mechanism receives drive through a gear at the rear end of the PC Drum.

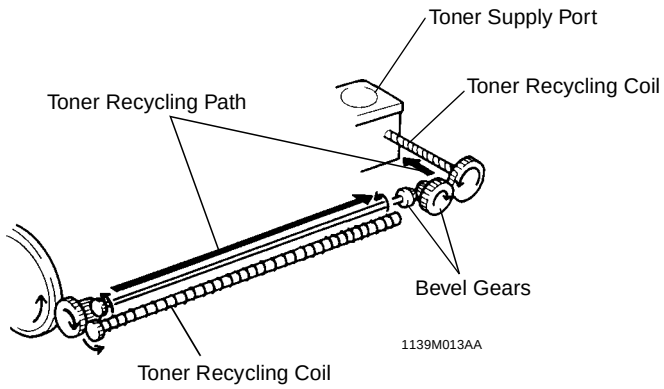

1174SBM0503A

5-3. Imaging Unit Fuse

The Imaging Unit is provided with a fuse called the I/U Fuse. When a new Imaging Unit is installed in the copier and the Power Switch turned ON, an I/U Set signal is output causing the copier to start the starter setup sequence and ATDC Sensor automatic adjustment.

When the starter setup sequence is completed normally, an I/U Fuse Blow signal is output to blow the I/U Fuse. Once the I/U Fuse is blown, the I/U Set signals are no longer output. This means that the starter setup sequence and ATDC Sensor automatic adjustment will not be carried out when the Power Switch is thereafter turned ON.

	Control Signal	When Fuse is not Blown	When Fuse is Blown	WIRING DIAGRAM
Fuse	PWB-A PJ10A-6	H	L	2-I

1174SBM0600A

6 PC DRUM

The photoconductive drum used in this copier is the organic photoconductor (OPC) type. The drum is made up of two distinct, semiconductive materials on an aluminum alloy base. The outer of the two layers is called the Charge Transport Layer (CTL), while the inner layer is called the Charge Generating Layer (CGL).

The PC Drum has its grounding point inside at its rear end. When the Imaging Unit is installed in the copier, the shaft on which the PC Drum Drive Coupling Gear is mounted contacts this grounding point.

Handling Precautions
This photoconductor exhibits greatest light fatigue after being exposed to light over an extended period of time. It must therefore be protected from light by a clean, soft cloth whenever the Imaging Unit has been removed from the copier. Further, use utmost care when handling the PC Drum to prevent it from being contaminated.

PC Drum Cross-Sectional View

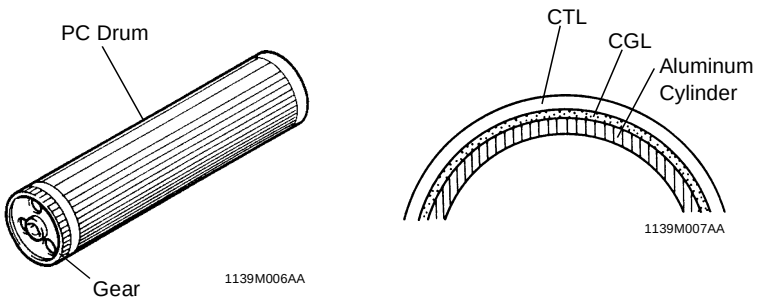

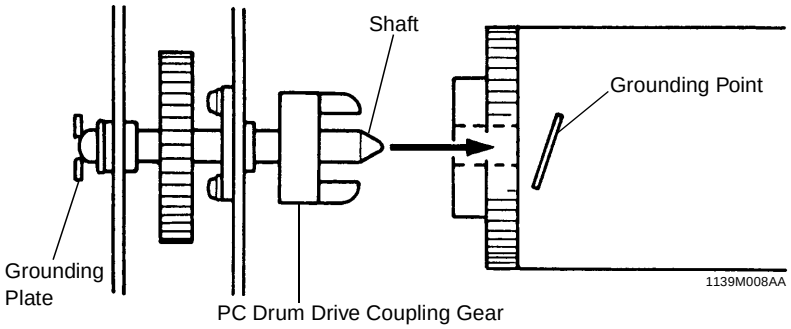

1174SBM0700A

7 DRUM CHARGING

The PC Drum Charge Corona has a Scorotron grid to deposit a negative DC charge evenly across the surface of the PC Drum. The grid voltage (VG) applied to the grid mesh is selected between -650V in the normal mode and -520V in the Photo mode by the Constant-Voltage Circuit in the High Voltage Unit.

The Corona Unit has a Comb Electrode which minimizes the amount of ozone produced. The conventional wire type corona unit produces a large amount of ozone due to corona discharge in radial directions. The comb electrode type, on the other hand, discharges only toward the Grid Mesh, meaning a reduced amount of ozone is produced.

The Comb Electrode can be cleaned by the user who pulls out to the front the shaft on which a Cleaning Roller is mounted.

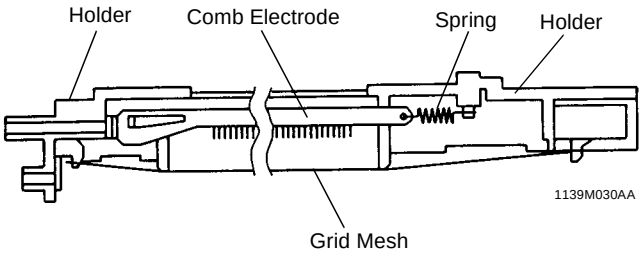

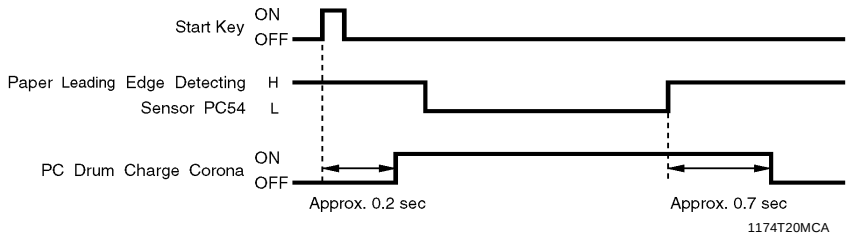

	Control Signal	ON	OFF	WIRING DIAGRAM
PC Drum Charge Corona	PWB-A PJ11A-9A	L	H	4-C

	Control Signal	Normal Mode	Photo Mode	WIRING DIAGRAM
Grid Voltage (VG)	PWB-A PJ11A-10A	L	H	4-C

1174SBM0800A

8 IMAGE ERASE LAMP

To prevent a black band from occurring across both the leading and trailing edges, and along the front and rear edges, of the electrostatic latent image, 31 LEDs of the Image Erase Lamp are turned ON before development takes place, thereby reducing to a minimum the unnecessary potential on the surface of the PC Drum. Because of the light path involved, this copier has the edge erasing cycle between drum charging and exposure.

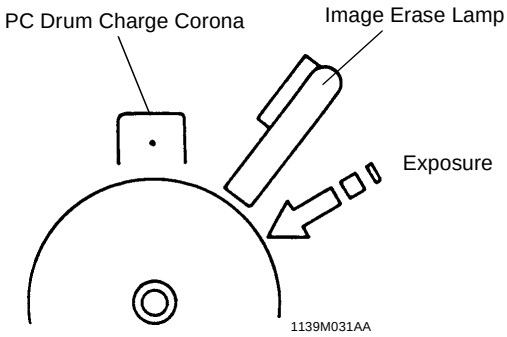

The position of the Image Erase Lamp can be adjusted using the adjusting screw on the front of the copier.

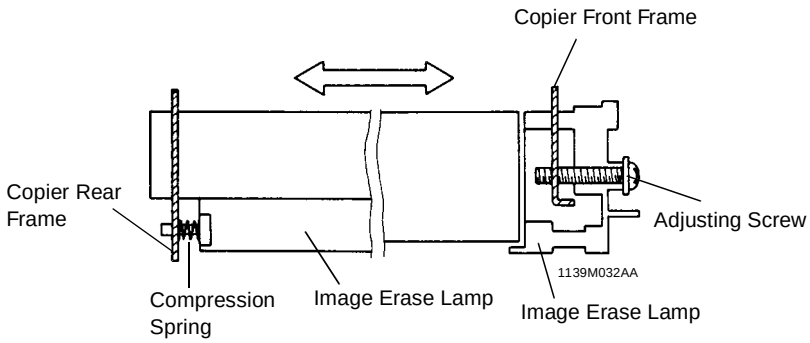

The 31 LEDs of the Image Erase Lamp are grouped as shown below. The table at the bottom of this page shows which LEDs turn ON and OFF for different paper sizes and different zoom ratios.

LED Group No.	LED No.	LED Group No.	LED No.
00	LED 1	10	LED 23
01	LED 2 to 6	11	LED 24
02	LED 7 to 11	12	LED 25
03	LED 12 to 16	13	LED 26
04	LED 17	14	LED 27
05	LED 18	15	LED 28
06	LED 19	16	LED 29
07	LED 20	17	LED 30
08	LED 21	18	LED 31
09	LED 22		

✻ The smaller the number, the nearer the LED is to the front side of the copier.

LED ON/OFF Pattern

Zoom Ratio	Paper Width	LED Group No.																		
From - To Less Than (%)	From - To Less Than (mm)	00	01	02	03	04	05	06	07	08	09	10	11	12	13	14	15	16	17	18
50~53	to 152	❍	–	–	–	❍	❍	❍	❍	❍	❍	❍	❍	❍	❍	❍	❍	❍	❍	❍
53~57	152 to 163	❍	–	–	–	–	❍	❍	❍	❍	❍	❍	❍	❍	❍	❍	❍	❍	❍	❍
57~61	163 to 173	❍	–	–	–	–	–	❍	❍	❍	❍	❍	❍	❍	❍	❍	❍	❍	❍	❍
61~64	173 to 183	❍	–	–	–	–	–	–	❍	❍	❍	❍	❍	❍	❍	❍	❍	❍	❍	❍
64~67	183 to 192	❍	–	–	–	–	–	–	–	❍	❍	❍	❍	❍	❍	❍	❍	❍	❍	❍
67~70	192 to 201	❍	–	–	–	–	–	–	–	–	❍	❍	❍	❍	❍	❍	❍	❍	❍	❍
70~74	201 to 212	❍	–	–	–	–	–	–	–	–	–	❍	❍	❍	❍	❍	❍	❍	❍	❍
74~78	212 to 223	❍	–	–	–	–	–	–	–	–	–	–	❍	❍	❍	❍	❍	❍	❍	❍
78~82	223 to 235	❍	–	–	–	–	–	–	–	–	–	–	–	❍	❍	❍	❍	❍	❍	❍
82~86	235 to 247	❍	–	–	–	–	–	–	–	–	–	–	–	–	❍	❍	❍	❍	❍	❍
86~90	247 to 259	❍	–	–	–	–	–	–	–	–	–	–	–	–	–	❍	❍	❍	❍	❍
90~93	259 to 270	❍	–	–	–	–	–	–	–	–	–	–	–	–	–	–	❍	❍	❍	❍
93~96	270 to 281	❍	–	–	–	–	–	–	–	–	–	–	–	–	–	–	–	❍	❍	❍
96~99	281 to 291	❍	–	–	–	–	–	–	–	–	–	–	–	–	–	–	–	–	❍	❍
99~	291 to	❍	–	–	–	–	–	–	–	–	–	–	–	–	–	–	–	–	–	❍

❍: ON; –: OFF

✻ Max. width (291 mm or more) applies to manual bypass copying in which the copier is unable to detect paper width.

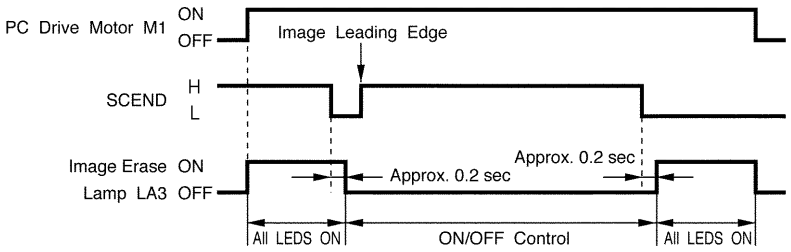

	Control Signal	ON	OFF	WIRING DIAGRAM
LA3	PWB-A PJ16A-4A ~ 9A	L	H	1-G

1174SBM0900A

9 OPTICAL SECTION

As the Scanner is moved by the Scanner Motor, the light from the Exposure Lamp is reflected off the original and guided through the four Mirrors onto the surface of the PC Drum to form the electrostatic latent image.

The image is enlarged or reduced as necessary by changing the position of the Lens and 4th Mirror and varying the angle of the 4th Mirror.

- 23 cpm Copier

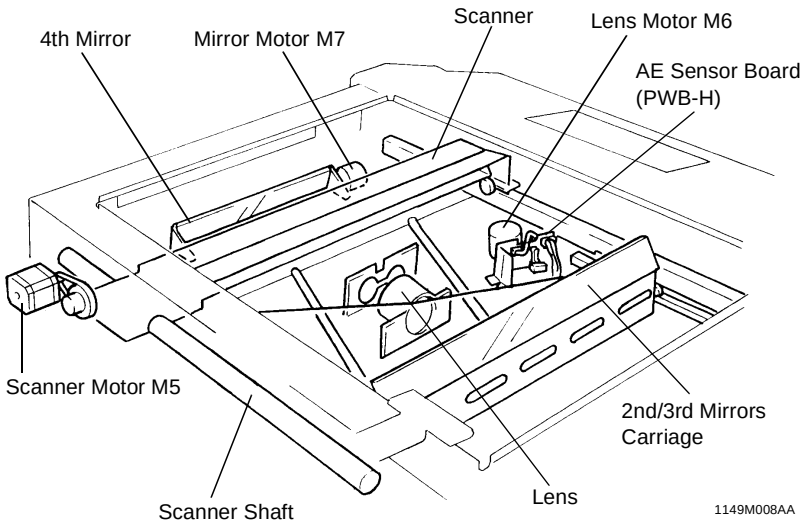

- 15/18 cpm Copier

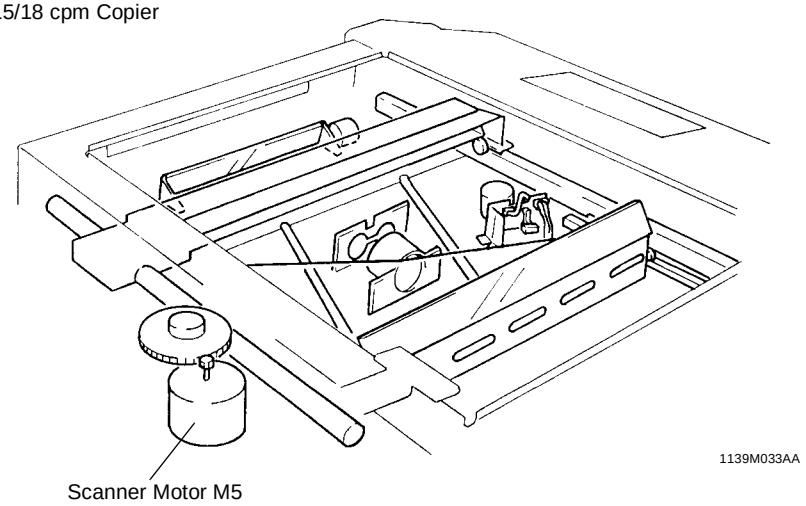

1174SBM0901A

9-1. Exposure Lamp

An AC halogen lamp is used as the Exposure Lamp.

As the exposure level is adjusted on the control panel, the duty ratio of the pulse of AVR Remote from the Master Board changes to increase or decrease the Exposure Lamp voltage, thereby changing the image density.

In Photo mode, the voltages are varied on a level 5V lower than the manual Exposure Lamp voltages.

Manual EXP Setting	9	8	7	6	5	4	3	2	✻ 1
Lamp Voltage Difference (V)	–8	–4	–2	–1	Reference	+1	+2	+4	+4

✻ At Manual Exposure Setting 1 only VG is reduced, thereby giving a lamp Voltage difference equivalent to +8V.

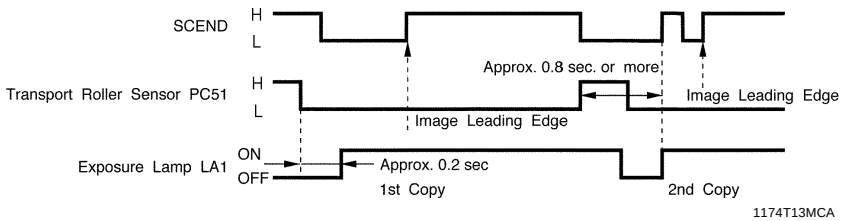

	Control Signal	ON	OFF	WIRING DIAGRAM
AVR Remote Signal (LA1)	PWB-A PJ14A-3	L	H	6-D

✻ If reduction copies are made using large size paper, the trailing edge of the first copy moves past the Transport Roller Sensor after the SCEND signal for the second copy has been generated. If the Exposure Lamp is turned ON for the second copy at the same timing as the first one, therefore, the image for the second copy is produced on the trailing edge of the first copy. To prevent this from occurring, the Exposure Lamp is turned ON for the second and subsequent copies when all of the following conditions are met:

- Approx. 0.8 sec. or more have elapsed after the first copy deactivated the Transport Roller Sensor.
- The Transport Roller Sensor output is HIGH.
- The SCEND signal for the second copy is output.

1174SBM0902A

9-2. AE Sensor

In the Auto Exposure Mode, the AE Sensor on the AE Sensor Board measures the intensity of the light reflected off the original, which results in the black/white ratio of a 210-mm-wide area from the reference position of the original being measured. According to this measurement, the Exposure Lamp voltage is automatically increased or decreased so that copies of consistent quality are produced.

The output from the AE Sensor is applied to the Master Board which, in turn, varies the duty ratio of the AVR Remote from it to vary accordingly the Exposure Lamp voltage.

Original Density (B/W Ratio)	High	Low
Intensity of Reflected Light	Low	High
AE Sensor Board Output	High	Low
AVR Duty	Increased	Decreased
Exposure Lamp Voltage	Increased	Decreased

	Control Signal	ON	OFF	WIRING DIAGRAM
PWB-H (AE Sensor)	PWB-A PJ9A-3	L	H	4-F
AVR Remote Signal (LA1)	PWB-A PJ14A-3	L	H	6-D

1174SBM0903A

9-3. Lamp Reflectors

The Main Reflector ensures that light from the Exposure Lamp exposes all areas of the original. The Auxiliary Reflector reflects light onto the areas that the Exposure Lamp cannot illuminate when an original that does not lie flat on the Original Glass (such as a book) is being used. This reduces shadows which would otherwise be transferred to the copy.

The Main Reflector is of aluminum, while the Auxiliary Reflector is aluminum to which film has been deposited. The same film as that used on the Auxiliary Reflector is affixed to both ends of the frame to compensate for the reduced intensity of light around both ends of the Exposure Lamp.

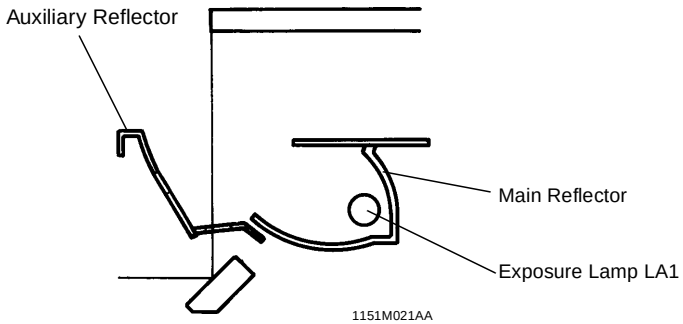

1174SBM0904A

9-4. Aperture Plates

Four Aperture Plates are moved to the right or left to ensure even light distribution.

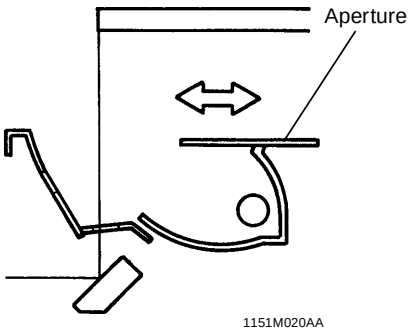

1174SBM0905A

9-5. Scanner and 2nd/3rd Mirror Carriage Movement

The Scanner and 2nd/3rd Mirrors Carriage are moved by the Scanner Drive Cable fitted in the rear side of the copier. The Cable is driven by the Scanner Motor.

Both the Scanner and 2nd/3rd Mirrors Carriage slide along the Scanner Shaft at the rear side. At the front side, there is a Slide Bushing attached to the underside of each of the bodies and that Bushing slides over the Slide Rail. The speed of the Scanner and 2nd/3rd Mirrors Carriage varies with different zoom ratios.

The Scanner Reference Position Sensor detects the home position of the Scanner and 2nd/3rd Mirrors Carriage. If they are not at the home position when the copier is turned ON, the Scanner Motor is energized to move them to the home position.

- 23 cpm Copier

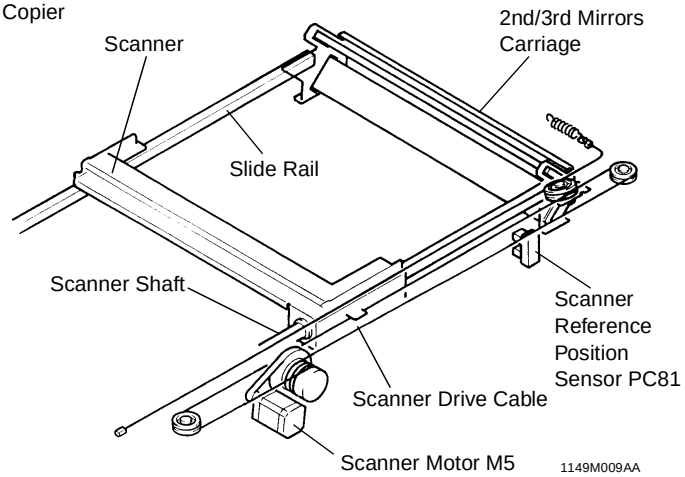

1149M009AA

- 15/18 cpm Copier

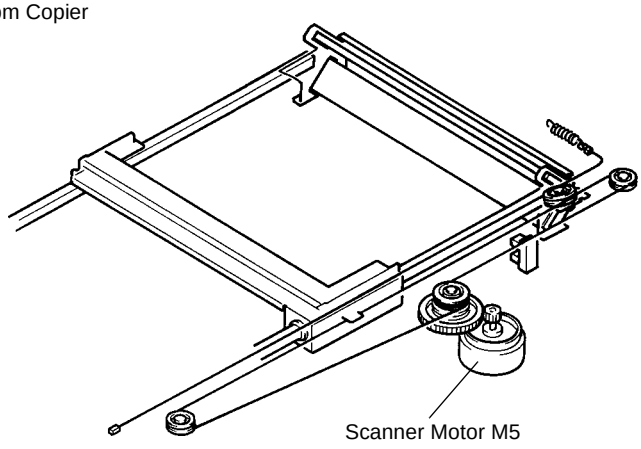

1151M022YA

The Scanner starts the scan motion as a Scan signal is output from the Master Board. At the start of a scan motion and other heavy load conditions, the Scanner Motor requires a large amount of current. The Current 1 or 2 signal from the Motor Drive Board is selected accordingly to vary the amount of current supplied to the Scanner Motor.

✻ The Current signal selection timing is controlled by software.

Current 1	H	H	L
Current 2	H	L	H
Operation	When the scan speed reaches a given level.	At scan start and during scan deceleration.	At return start and during return motion.

On receiving the Scan signal, the Motor Drive Board applies motor drive pulses, which are out-of-phase with each other, to the Scanner Motor. The motor speed is varied by changing the width of the pulses applied to the Scanner Motor.

	Control Signal	Energized	Deenergized	WIRING DIAGRAM
M5 Scan Signal	PWB-F (23 cpm Copier) PWB-E (15/18 cpm Copier)	L	H	8-D/8-H
M5 Current Switching Signal 1	PWB-F (23 cpm Copier) PWB-E (15/18 cpm Copier)	L	H	
M5 Current Switching Signal 2	PWB-F (23 cpm Copier) PWB-E (15/18 cpm Copier)	L	H	

	Control Signal	Blocked	Unblocked	WIRING DIAGRAM
PC81	PWB-A PJ17A-7B	L	H	11-A

1174SBM0906A

9-6. 4th Mirror Movement

The 4th Mirror is moved to vary the conjugate distance for a particular zoom ratio by driving the rack-and-pinion gears at the front and rear ends of the mirror using the Mirror Motor (stepping motor). The Levers of the Holder to which the Mirror is mounted slide along a tilted rail to change the Mirror angle. This ensures that the light strikes the surface of the PC Drum in the direction of the normal, thereby preventing resolution from being degraded.

The Mirror Reference Position Sensor is used to control the position of the 4th Mirror. It ensures that the Mirror is located at the home position when the copier is turned ON.

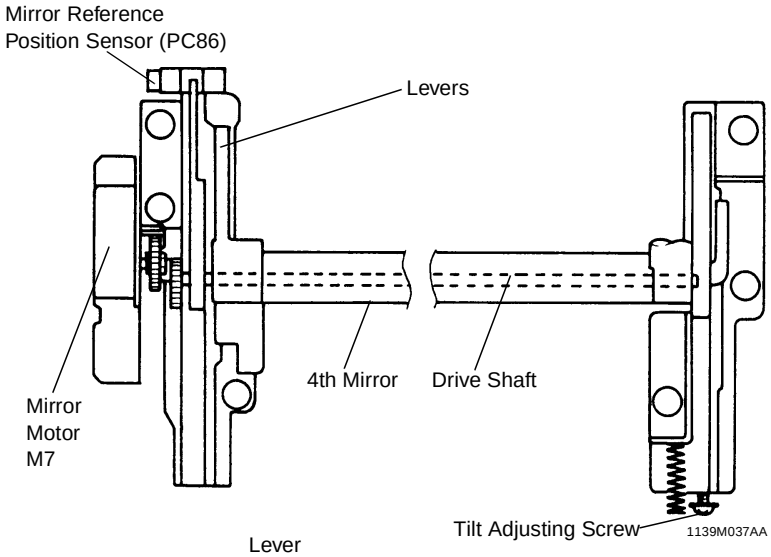

	Control Signal	Energized	Deenergized	WIRING DIAGRAM
M7	PWB-A PJ16A-2B	L	H	8-B/8-F

	Control Signal	Blocked	Unblocked	WIRING DIAGRAM
PC86	PWB-A PJ22A-5	L	H	12-A

1174SBM0907A

9-7. Lens Movement

The Lens is moved by the Lens Drive Cable which is driven by the Lens Motor (stepping motor). The motor drive pulses sent from the Motor Drive Board drive the Lens Motor to move the Lens a given distance, corresponding to the zoom ratio, from the reference position determined by the Lens Reference Position Sensor.

There is a fixed-type Lens Aperture Cover provided at the rear of the Lens (on the 4th Mirror end). It limits the amount of light striking the surface of the PC Drum.

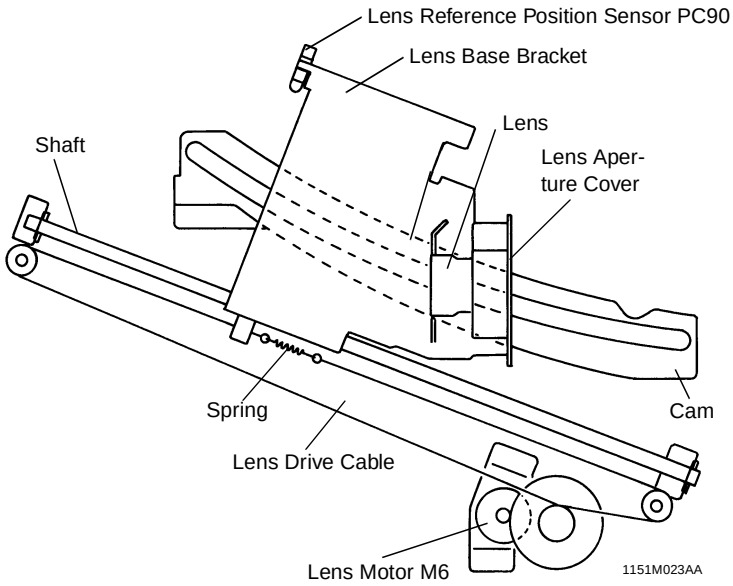

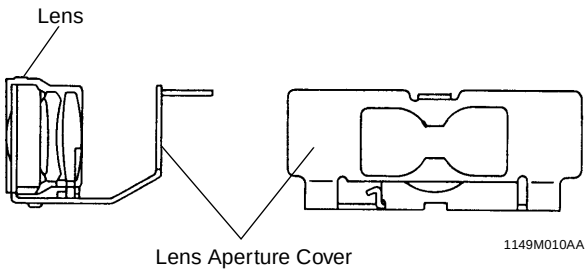

	Control Signal	Energized	Deenergized	WIRING DIAGRAM
M6	PWB-A PJ16A-1B	L	H	8-B/8-F

	Control Signal	Blocked	Unblocked	WIRING DIAGRAM
PC90	PWB-A PJ22A-8	L	H	12-B

1174SBM1000A

10 ORIGINAL SIZE DETECTING SENSORS (23 cpm COPIER ONLY)

The four sensors fixed in the optical section receive the light reflected off the original to determine the size of the original in the Auto Paper and Auto Size mode. (The image density of the original, or OD, that can be detected is 0.6 or less.)

1174SBM1001A

10-1. Original Size Detecting Sensors

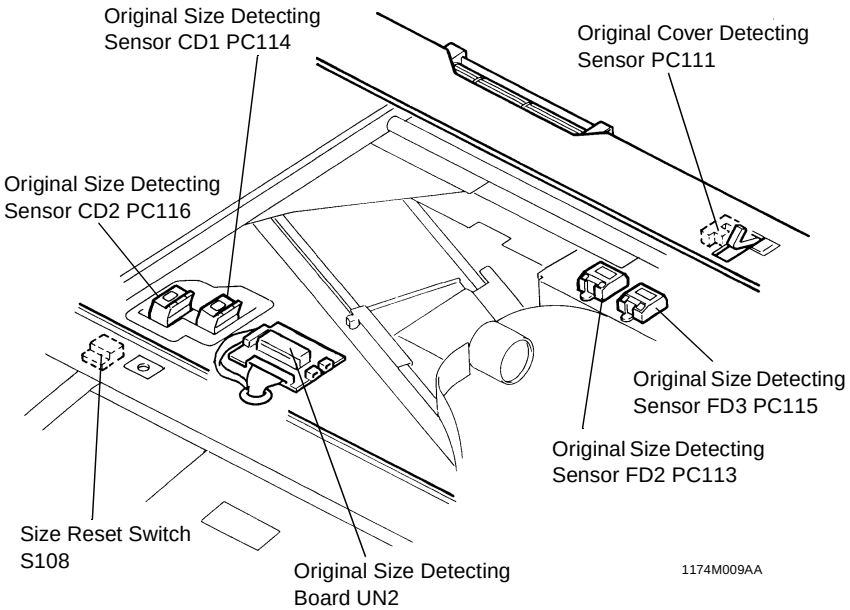

1174SBM1002A

10-2. Original Size Detecting Operation

Each photo receiver of the original size detecting sensors responds to reflected light of a given intensity with reference to the intensity of the light emitted by each LED. This allows the Original Size Detecting Board to determine whether or not there is an original within a set distance.

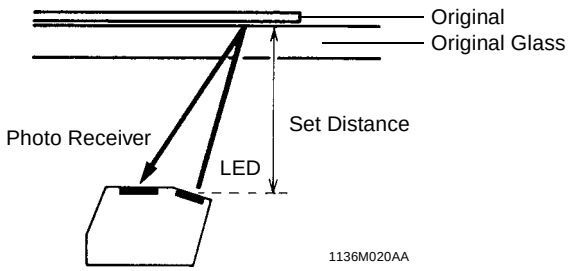

1174SBM1003A

10-3. Sensor Locations

- The number and location of the Original Size Detecting Sensors vary depending on the marketing area as shown below.

Areas \ Sensors	CD1 (PC114)	CD2 (PC116)	FD2 (PC113)	FD3 (PC115)
Metric Areas	❍	●	❍	●
Inch Areas	❍	●	❍	●
Mixed inch/metric Areas	❍	❍	❍	❍
U.S.A and Canada Areas	●	●	●	●

❍: Standard ●: Optional

NOTE

If the optional sensors are installed, set Jumper Connector JP2 on the Original Size Detecting Board as illustrated below and run the F7 operation.

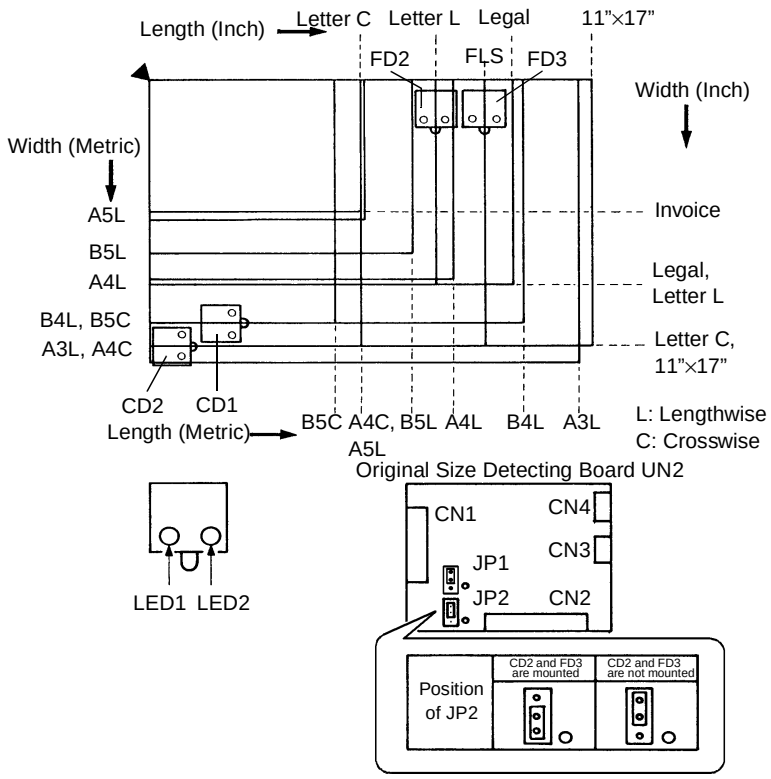

1174M012AB

1174SBM1004A

10-4. Size Detection

- The Original Size Detecting Board reads the output data provided by the original size detecting sensors. By comparing the data from each sensor with the threshold level, it determines whether there is an original placed on the Original Glass. The Original Size Detecting Board then determines the size of the original according to the combination of the data.

Metric Area

		FD2		FD3		CD1		CD2
Original Size	Size Determined by UN2	LED1	LED2	LED1	LED2	LED1	LED2	LED1
A3L	A3L (A3L)	❍	❍	❍(❍)	❍(●)	❍	❍	❍(❍)
B4L	B4L (B4L)	❍	❍	❍(❍)	❍(●)	●	❍	●(●)
A4L	A4L (A4L)	❍	❍	●(●)	●(●)	●	●	●(●)
A5L	A5L (A5L)	●	●	●(●)	●(●)	●	●	●(●)
A4C	A4C (A4C)	●	●	●(●)	●(●)	❍	❍	❍(❍)
Letter L: 8-1/2"×11"	Letter L (Letter L)	❍	●	●(●)	●(●)	●	●	●(●)
11"×17"	11"×17" (A3L)	❍	❍	❍(❍)	❍(●)	❍	❍	●(❍)
Legal: 8-1/2"×14"	Legal (A4L)	❍	❍	❍(●)	❍(●)	●	●	●(●)
FLS: 8-1/2"×13"	FLS (A4L)	❍	❍	❍(●)	●(●)	●	●	●(●)
Letter C: 11"×8-1/2"	Letter C (A4C)	●	●	●(●)	●(●)	❍	❍	●(❍)
No Original	A5L	●	●	●(●)	●(●)	●	●	●(●)

Inch Area

		FD2		FD3		CD1	
Original Size	Size Determined by UN2	LED1	LED2	LED1	LED2	LED1	LED2
11"×17"	11"×17" (11"×17")	❍	❍	❍(❍)	❍(❍)	❍	❍
Legal: 8-1/2"×14"	Legal (Legal)	❍	❍	❍(❍)	❍(❍)	●	●
Letter L: 8-1/2"×11"	Letter L (Letter L)	❍	●	●(●)	●(●)	●	●
Letter C: 11"×8-1/2"	Letter C (Letter C)	●	●	●(●)	●(●)	❍	❍
FLS: 8-1/2"×13"	FLS (Legal)	❍	❍	❍(❍)	●(❍)	●	●
Invoice: 5-1/2"×8-1/2"	Invoice	●	●	●(●)	●(●)	●	●
No Original	Invoice	●	●	●(●)	●(●)	●	●

✻ ❍: Original Present ●: Original Not Present

✻ If no optional sensors are mounted, data is processed as indicated in ( ) and the original sizes determined by the Size Detecting Board are as indicated in ( ).

✻ The Original Size Detecting Board does not use the data provided by LED2 of Original Size Detecting Sensor CD2 for the determination of the original size.

✻ Any non-standard size is rounded off to the nearest standard size.

✻ When all sensors detect no original, the Original Size Detecting Board determines that A5L or Invoice size is present.

1174SBM1005A

10-5. Original Size Detection Timing

Master CPU on the Master Board affirms and resets the readings of the original size at the following timings.

- Takes size readings: When the Original Cover is raised to an angle of 15° or more (Original Cover Detecting Sensor is deactivated).
- Affirms size readings: When the Original Cover is lowered to an angle of 15° or less (Original Cover Detecting Sensor is just activated); or, when the Start key is pressed with the Original Cover Detecting Sensor in the deactivated state.
- Resets size readings: When the Original Cover is raised (Size Reset Switch is deactuated).

1174SBM1006A

10-6. Original Cover Angle Detection (23 cpm Copier Only)

The Original Cover Detecting Sensor detects the angle of the Original Cover as it is raised. The following control is provided.

Original Cover raised to an angle of 15° or more:
The size of the original is read by the Original Size Detecting Sensors.

Original Cover raised to an angle of less than 15°:
When the Original Cover Detecting Sensor is activated, the original size data is latched and Original Size Detecting Board UN2 transmits the size data to the Master Board. As soon as the Size Reset Switch is turned ON, the size data is validated and the paper size is shown on the control panel.

The paper size selected is reset when the Size Reset Switch is turned OFF.

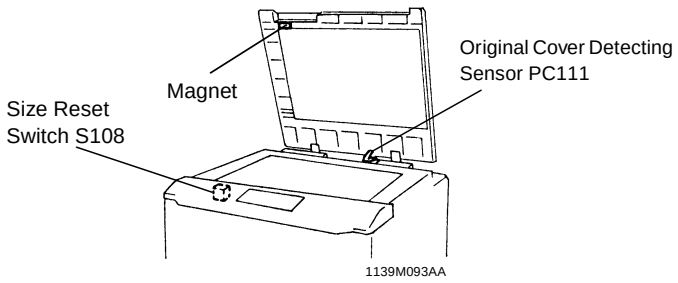

	Control Signal	Blocked	Unblocked	WIRING DIAGRAM
PC111	PWB-A PJ18A-2	L	H	12-B

	Control Signal	ON	OFF	WIRING DIAGRAM
S108	PWB-A PJ23A-11B	L	H	6-C

1174SBM1100A

11 DEVELOPMENT

The Developing Unit built into the Imaging Unit performs the following functions:

- Mixes the toner and carrier well to ensure that a sufficient amount of toner is positively charged.
- Detects the toner-to-carrier ratio of the developer by means of the ATDC Sensor and replenishes the supply of toner as necessary.
- Detects a toner empty condition by means of the ATDC Sensor.
- Ensures that a proper amount of toner is attracted to the PC Drum by means of its Sleeve/Magnet Roller, Developing Bias, and Doctor Blade.

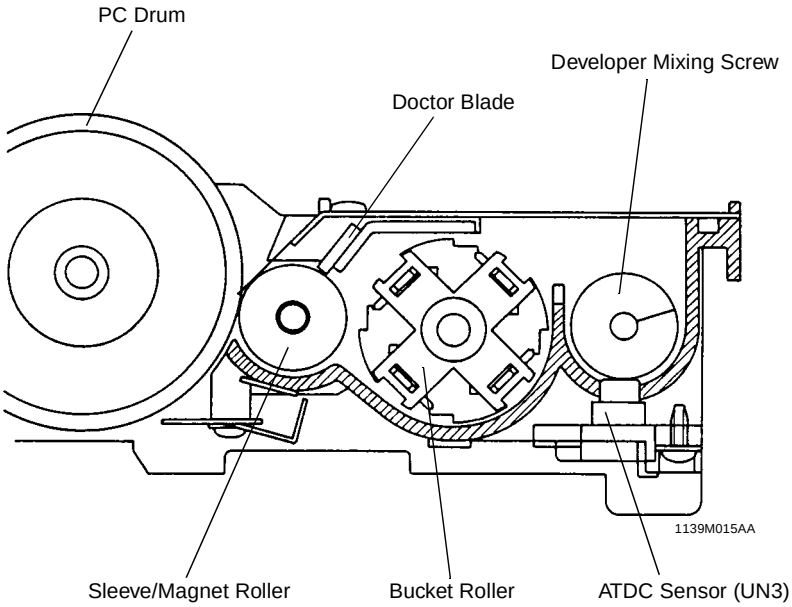

1174SBM1101A

11-1. ATDC Sensor

The ATDC Sensor installed on the underside of the Developer Mixing Chamber detects the varying toner-to-carrier ratio of the developer which flows over it in the Chamber. The copier CPU compares the detected ratio with the ratio set by the ATDC Detection Level Mode (Tech. Rep. Choice C-90) to control toner replenishment.

Set T/C (%)	ATDC Output Voltage (V)
6.0	2.5 (Standard)

Toner is replenished for 5 seconds (the Toner Bottle is turned one turn, which is equivalent to a run of 2 copy cycles) for each Toner Replenishing signal.
If the toner-to-carrier ratio becomes lower than 3.5% in a toner-empty condition, the copier inhibits the initiation of a new copy cycle (this feature can be enabled or disabled by a Tech. Rep. Choice mode). When a ratio of 4% or more is recovered as a result of Auxiliary Toner Replenishing, the copier permits the initiation of a new copy cycle.
If the Front Door is swung open and closed with a T/C ratio of less than 4%, the copier initiates an Auxiliary Toner Replenishing sequence. (It stops the sequence as soon as a T/C ratio of 4.5% is reached.)

ATDC Sensor Automatic Adjustment
An automatic adjustment of the ATDC Sensor is made in the F8 Test Mode operation and when a new Imaging Unit is installed in the copier.

✻ When a New Imaging Unit is Installed in the Copier:
Following the execution of the starter setup mode upon power-up, the copier CPU reads the output value of the ATDC Sensor and establishes the reading as the reference value.

✻ When F8 is Run after Starter Has Been Changed:
Following the execution of the starter setup mode upon pressing of the Start Key, the copier CPU reads the output value of the ATDC Sensor and establishes the reading as the reference value.

NOTE
If an F8 operation is run at a time when the starter has not been changed, it can result in a wrong T/C reference value being set by the copier. Avoid casual use of F8.
If the setting value has been cleared because of the RAM Board being replaced, however, enter the ATDC control value before the replacement using the Zoom Up/Down Keys in the F8 operation (without pressing the Start Key).

Toner Empty Detection

The copier has no toner empty detecting sensor and, instead, the ATDC Sensor performs that function. The ATDC Sensor checks the toner-to-carrier ratio and, if it reads a T/C ratio lower than the set level for 37 copies and, further, if it next reads a ratio 1% lower than the setting, this is a toner-empty condition. The toner-empty condition is canceled after detection under any of the following conditions when the Front Door is swung open and closed:

- T/C is 4% or more: The toner-empty condition is canceled.
- T/C is less than 4%: The copier initiates an Auxiliary Toner Replenishing sequence and cancels the toner-empty condition as soon as T/C reaches 4.5%.

	Control Signal	Set T/C	Standard Output Voltage	WIRING DIAGRAM
UN3	PWB-A PJ10A-3	6.0%	2.5	2-H

1174SBM1102A

11-2. Magnet Roller

The Magnet Roller of the Sleeve/Magnet Roller of this copier has the following magnetic characteristics. Part of pole S2 before the principal N1 pole (i.e., the area marked as S2b in the Fig. below) provides a very weak magnetic force. If developer is compacted and clogs at the Doctor Blade and, as a result, part of the surface of the Sleeve/Magnet Roller is not covered with developer, the nearby developer around S2b goes to those uncovered areas because of its weak magnetic force. This helps prevent blank lines from occurring on the copy.

The Sleeve Roller, onto which developer is attracted by the magnetic fields of force set up by the poles of the Magnet Roller, turns to convey the developer toward the point of development.This also means that developer fresh from the Developer Mixing Chamber is always brought to the point of development.

As noted earlier, the Imaging Unit integrates the Developing Unit with the PC Drum into one body. Because of that, it is impossible to move the Developing Unit against the PC Drum, thereby providing a certain distance between the PC Drum and Sleeve/Magnet Roller. The Sleeve/Magnet Roller has therefore been made movable: the Bushing is pressed by compression springs thereby pressing the Positioning Collars on both ends of the Sleeve/Magnet Roller against the PC Drum. This ensures a given distance between the PC Drum and the Sleeve/Magnet Roller.

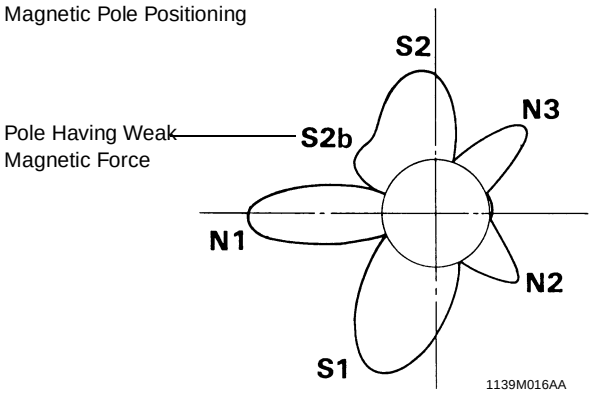

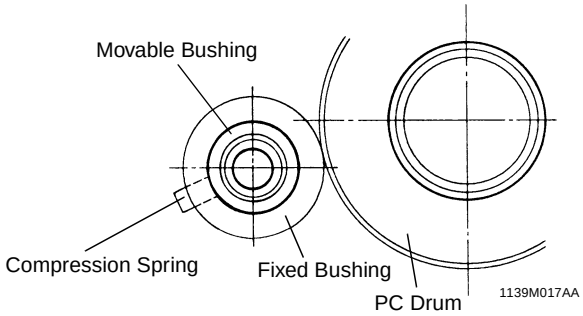

1174SBM1103A

11-3. Developing Bias

A negative voltage (Vb = Developing Bias voltage) is applied to the Sleeve Roller to prevent a foggy background on the copy. The amount of toner attracted onto the surface of the PC Drum depends on how much lower the PC Drum surface potential (Vi) is than Vb (i.e., the potential difference).

- When the potential difference is large, a greater amount of toner is attracted.
- When the potential difference is small, a smaller amount of toner is attracted.

Because the Sleeve/Magnet Roller of this copier is movable, a flat spring is used as the Bias Terminal which follows the movement of the Sleeve/Magnet Roller.

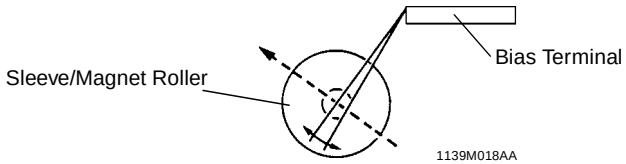

1139M018AA

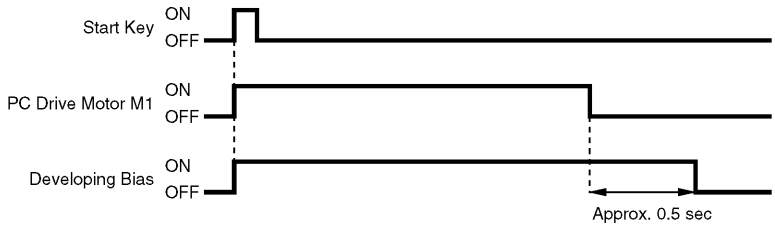

1151T01MCA

	Control Signal	ON	OFF	WIRING DIAGRAM
Developing Bias	PWB-A PJ11A-8A	L	H	2-H

1174SBM1104A

11-4. Doctor Blade

The Doctor Blade installed over the Sleeve/Magnet Roller regulates the height of the developer brush on the surface of the Sleeve Roller. The Blade is perpendicular to the direction of movement of the Sleeve/Magnet Roller to minimize variations in the distance between the Doctor Blade and Sleeve/Magnet Roller as the Sleeve/Magnet Roller moves.

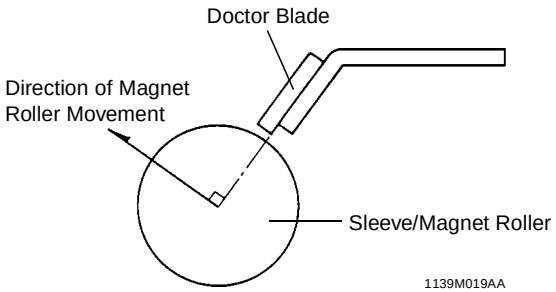

1174SBM1105A

11-5. Sleeve/Magnet Roller Lower Filter

✻ Except the U.S.A., Canada, and Europe

There is a slit provided under the Sleeve/Magnet Roller to collect insufficiently charged toner in the grounded Toner Antispill Trap. This effectively prevents the toner from spilling onto the mechanisms inside the copier.

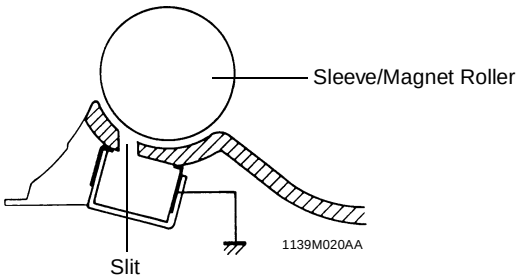

1174SBM1200A

12 TONER HOPPER

1174SBM1201A

12-1. Toner Hopper Locking/Unlocking

The Toner Hopper is not integrated into the Imaging Unit; instead, it is secured to the copier. To replace an empty Toner Bottle, the user first needs to swing the Toner Bottle Holder out 40° to the front. The Holder pivots about the Toner Supply Port as it is swung out or in, which effectively prevents toner from spilling when the Holder is swung out or in.

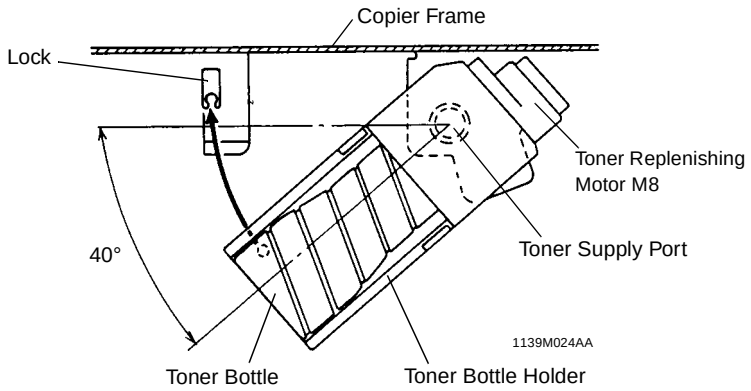

1174SBM1202A

12-2. Toner Replenishing

- Drive from the Toner Replenishing Motor is transmitted via the motor shaft to the Bottle Cap Claw, which turns the Toner Bottle. As the Toner Bottle is fitted to the Coupling, both turn together during toner replenishing.
- A Metering Chamber provided at the toner supply port of the Coupling regulates the amount of toner that falls through the port.
- There is a supply port for the exclusive use of the starter. The starter does not pass through the Metering Chamber, which means that it takes a shorter time to load the starter.

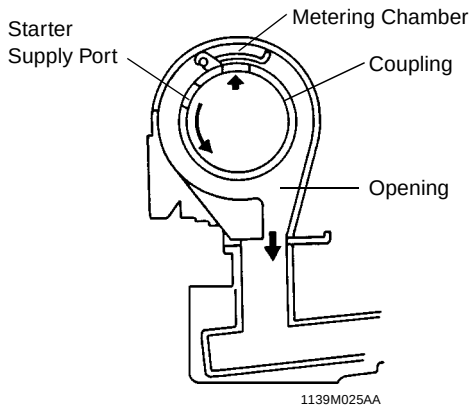

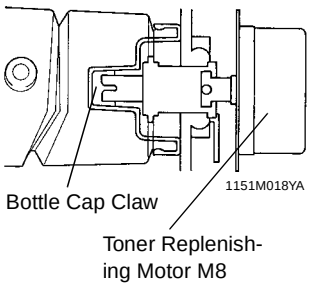

1174SBM1203A

12-3. Shutter

The connection between the Toner Hopper and Imaging Unit is provided with a Shutter which prevents toner from spilling when the Imaging Unit is slid out of the copier.

Imaging Unit Out of Copier

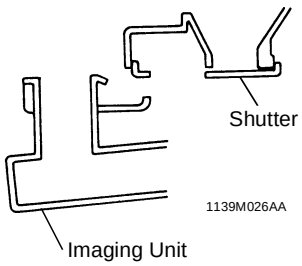

Imaging Unit in Position in Copier

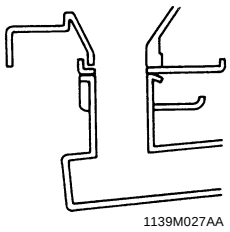

1174SBM1204A

12-4. Toner Hopper Home Position Detection

The Coupling is fitted with a Home Position Plate which is detected by the Toner Hopper Home Position Sensor. This ensures that the Toner Bottle is located so that its opening is positioned on top whenever the Toner Replenishing Motor is deenergized.

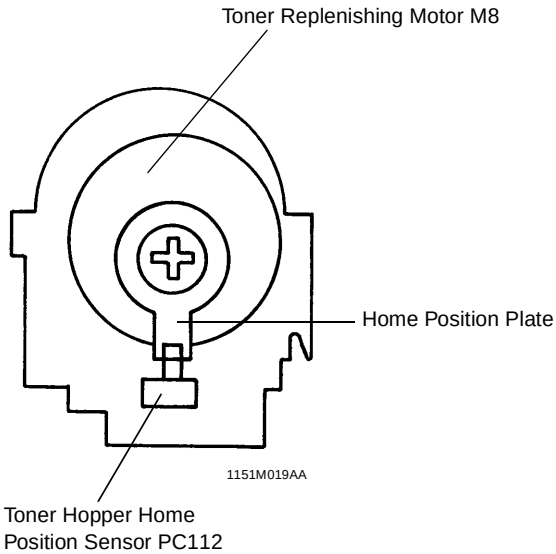

1174SBM1205A

12-5. Toner Bottle Vibration

When the indentations at three places on the left-hand end (as viewed when the Toner Bottle is in position) of the Toner Bottle move past the protrusion in the Toner Bottle Holder, the Toner Bottle is vibrated to prevent some of the toner from remaining unconsumed in the Bottle.

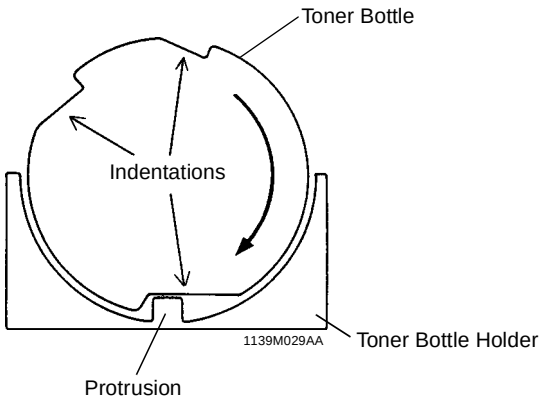

1174SBM1206A

12-6. Toner Replenishing Control

1. The ATDC Sensor installed in the Imaging Unit reads the toner-to-carrier ratio of the developer in the Developer Mixing Chamber for each copy cycle.
2. It samples the ratio 16 times and compares each with the preset level.
3. If eight or more readings out of the total 16 are lower than the preset level, a Toner Replenishing signal is output.
4. The Toner Replenishing Motor is turned one complete turn for each Toner Replenishing signal (which is equivalent to a supply of 0.3 to 0.6 g toner).

✻ The readings taken while the Toner Replenishing Motor is turning (it takes 5 seconds for the Toner Replenishing Motor to turn one complete turn) are ignored. This means that, in a multi-copy cycle, the ATDC Sensor may take readings as the next copy cycle is started while the Toner Replenishing Motor is turning; but, those readings are ignored.

	Control Signal	Energized	Deenergized	WIRING DIAGRAM
M8	PWB-A PJ5A-6	H	L	2-D

	Control Signal	Blocked	Unblocked	WIRING DIAGRAM
PC112	PWB-A PJ17A-2B	L	H	2-D

	Control Signal	Set T/C	Reference Voltage	WIRING DIAGRAM
UN3	PWB-A PJ10A-3	6.0%	2.5	2-H

1174SBM1300A

13 PAPER TAKE-UP/FEED SECTION (2ND DRAWER: 23 cpm COPIER ONLY)

The copier is equipped with two Paper Drawers, 1st and 2nd, that can be slid out to the front of the copier. Each can hold up to 250 sheets of paper.

The 1st Drawer is a universal paper size type, while the 2nd Drawer is a fixed paper size type.

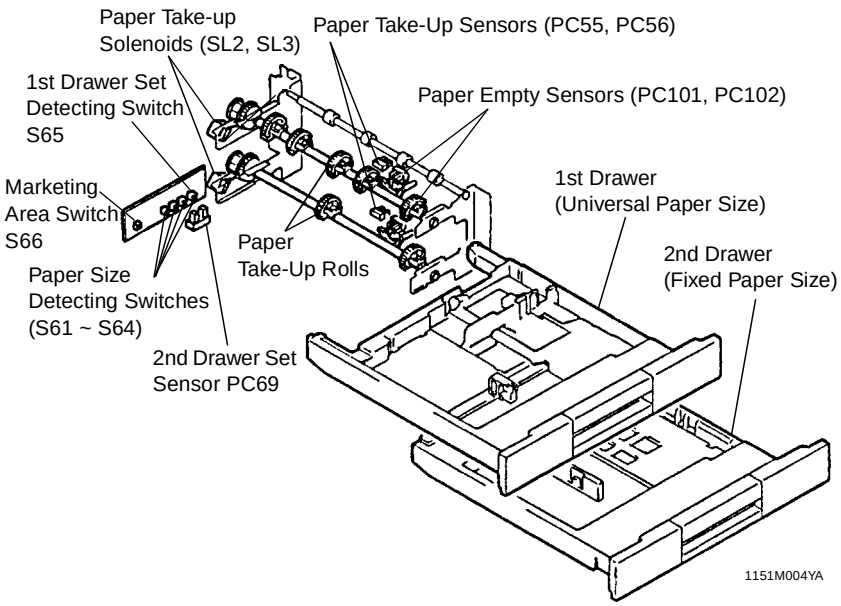

Paper Sizes That Can be Loaded

	Marketing Area Switch S66	1st Drawer	2nd Drawer
Inch Areas	Inch	5.5” × 8.5”, 8.5” × 11”, 8.5” × 14”, 11” × 8.5”, 11” × 14”, 11” × 17”	8.5” × 11” [LETTER], 11” × 8.5” [LETTER], 8.5” × 13” [G.LEGAL], 8.5” × 14” [LEGAL], 11” × 17”, 5.5” × 8.5” [INVOICE], 8” × 10.5” [G.LETTER] 10.5” × 8” [G.LETTER], 8-1/4” × 13”, 10” × 14”, 11” × 14”, 210 × 280, 280 × 210, 216 × 297, 216 × 320, 220 × 280, 220 × 330, 280 × 420
	Metric	A5L, A4L, A4C, A3L 8” × 13”, 8.5” × 13” [G.LEGAL] 8-1/4” × 13”	

	Marketing Area Switch S66	1st Drawer	2nd Drawer
Metric Areas	Metric	A3L, B4L, A4L, A4C, A5L, B5C, B5L (Taiwan Only), 8" × 13", 8.5" × 13"✻, 8-1/4" × 13"	A3L, B4L, A4L, A4C, A5L, 8" × 13" 8-1/4" × 13", 10" × 8" [QUARTO], 210 × 280, 216 × 297, 297 × 216, 216 × 320, 220 × 280, 297 × 430
	Inch	5.5" × 8.5" [INVOICE], 8.5" × 11" [LETTER]✻, 8.5" × 14" [LEGAL]✻, 11" × 17"✻	

✻ Except Taiwan

1174SBM1301A
13-1. Edge Guide and Trailing Edge Stop

1st Drawer
The 1st Drawer is a universal type allowing the user to slide freely the Edge Guide and Trailing Edge Stop to accommodate paper of different sizes.

The Edge Guide and Trailing Edge Stop can be locked into position by meshing the notches in the Lock Lever with those in the Drawer.

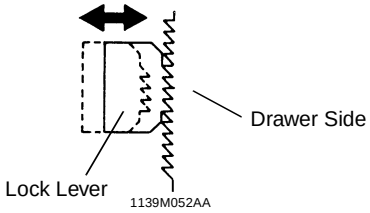

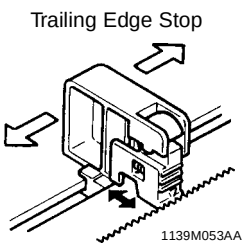

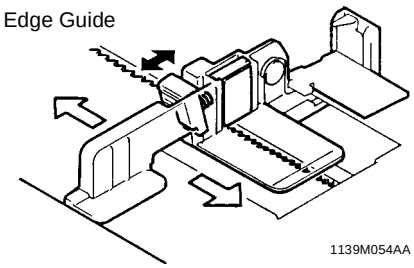

2nd Drawer
The 2nd Drawer is a fixed paper size type, in which the Edge Guide and Trailing Edge Stop are screwed into fixed positions.

The Edge Guide is provided with an Edge Pad (which is Velcro) that prevents double feed and ensures that the paper stack keeps its correct alignment with regard to the paper path reference position.

1174SBM1302A
13-2. Drawer Positioning

Each of the 1st and 2nd Drawers is positioned by fitting its Positioning Plate on the paper take-up end into the groove in the Drawer Frame. It is then secured in position by the magnet installed in the Drawer Front Cover on the paper take-up end. The tabs on both sides at the front of the Drawer ensure that the Drawer clicks into position. Any deviation in the paper path reference position can be adjusted within ±2 mm by moving the Front Cover of the Drawer to the front or rear.

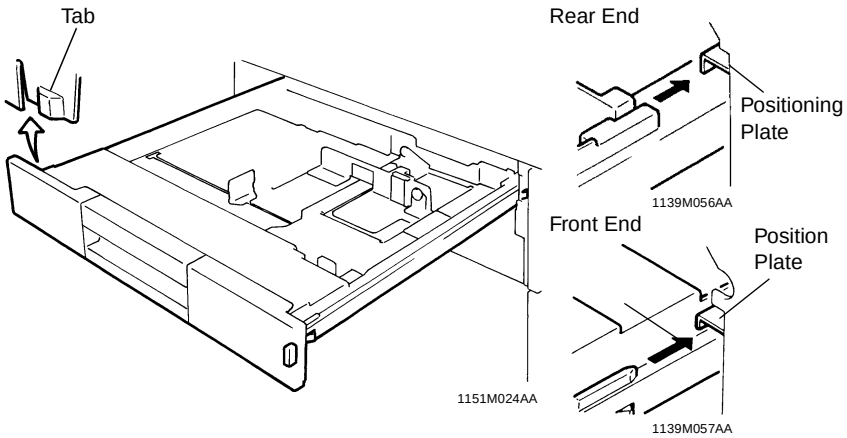

1174SBM1303A
13-3. Paper Lifting Plate

The Paper Lifting Plate of each Drawer is raised at all times by two Paper Lifting Springs.

For the 2nd Drawer, the type and position of the Paper Lifting Springs must be changed according to the paper size. (For details, see DIS/REASSEMBLY, ADJUSTMENT.)

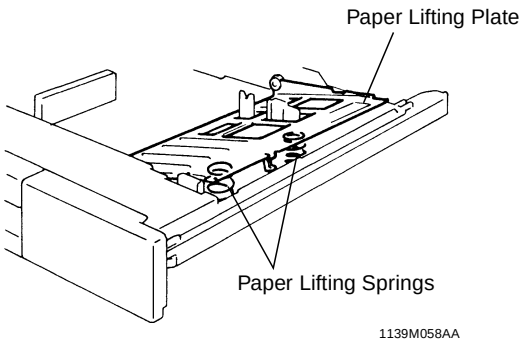

1174SBM1304A

13-4. Drawer-in-Position Detection

The copier detects that the Drawer is slid into position as follows.

1st Drawer
When the 1st Drawer is slid into the copier, the Drawer Frame presses the 1st Drawer Set Detecting Switch installed on the back panel of the copier.

2nd Drawer
When the 2nd Drawer is slid into the copier, the Rib on the Drawer Frame blocks the 2nd Drawer Set Sensor.

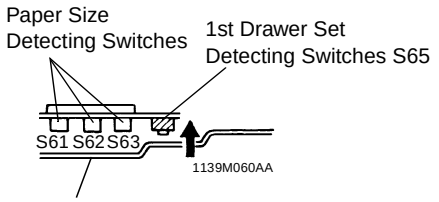

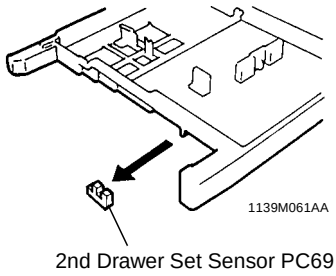

<Control>

	Control Signal	ON	OFF	WIRING DIAGRAM
S65	PWB-A PJ15A-11	L	H	15-B

	Control Signal	Blocked	Unblocked	WIRING DIAGRAM
PC69	PWB-A PJ2A-2	L	H	17-A

1174SBM1305A

13-5. Universal Tray (1st Drawer) Paper Size Detection

The length (feeding direction) and width (crosswise direction) of the paper are independently detected and the copier determines the paper size by combining the two separate detections made.

On the bottom of the tray is a lever fitted to the Trailing Edge Stop and another lever fitted to the Edge Guide. These levers actuate and deactuate Paper Size Detecting Switches to allow the copier to determine a particular paper size.

The Marketing Area Switch is used to set the type of paper to be used (inch or metric).

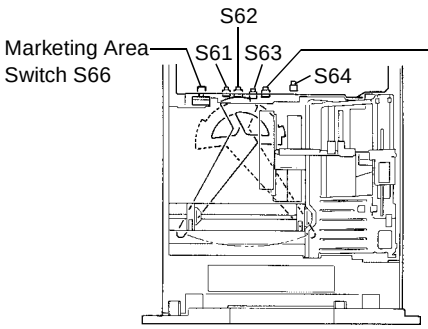

1151M003AA

NOTE
The number and the installed position of the Paper Take-Up Rolls vary depending on the marketing areas: inch or metric. See pp. M-43 and M-44 for the sizes of the paper that can be taken up and fed out of the drawer.

Paper Size Detecting Switches				Paper Length	Inch/Metric Setting Switch S66	
Length (FD)			Width (CD)		Metric	Inch
S61	S62	S63	S64			
ON	ON	ON	–	~402.0	A3	11” × 17”
ON	ON	OFF	OFF	402.0~349.2	B4	8-1/2” × 14”
			ON			11” × 14”
ON	OFF	OFF	OFF	349.4~317.2	FLS	8-1/2” × 14”
			ON			11” × 14”
OFF	OFF	OFF	–	317.2~272.0	A4L	Letter L
OFF	OFF	ON	OFF	272.0~222.0	B5L	Letter L
			ON			Letter C
OFF	ON	ON	OFF	222.0~195.0	A5L	Invoice L
			ON		A4L	Letter C
OFF	ON	OFF	OFF	195.0~	B5C	Letter C
			ON			Letter L

The 2nd Drawer accepts only paper of a fixed size and has no paper size detecting system. (The paper size is input from the control panel using a Tech. Rep. Mode.)

<Control>

	Control Signal	ON	OFF	WIRING DIAGRAM
S61	PWB-A PJ15A-1	L	H	14-A
S62	PWB-A PJ15A-3	L	H	14-A
S63	PWB-A PJ15A-6	L	H	15-A
S64	PWB-A PJ15A-9	L	H	15-A
S66	PWB-A PJ2A-4	L	H	17-B

1174SBM1306A
13-6. Paper Empty Detection

When the Drawer runs out of paper, the Actuator for the Paper Empty Sensor drops into the cutout in the Paper Lifting Plate. This activates the Paper Empty Sensor and the copier detects that the Drawer has run out of paper.

As noted earlier, the Paper Lifting Plate is raised at all times by the Paper Lifting Springs. To prevent the Actuator for the Paper Empty Sensor from being caught by the paper stack when the Drawer is slid out of the copier, it is tilted slightly. This, however, results in the operating stroke of the Actuator becoming small, which increases the possibility of the Actuator activating the Sensor by the flexing of a sheet of paper as it is taken up and fed in. To prevent this false detection of a paper-empty condition, the paper empty detection is enabled only when the Paper Take-Up Roll is in the retracted position.

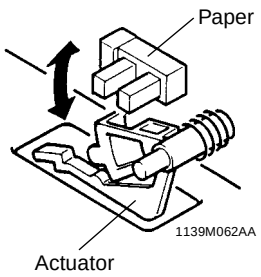

<Control>

	Control Signal	Blocked	Unblocked	WIRING DIAGRAM
PC101	PWB-A PJ4A-6	L	H	17-F
PC102	PWB-A PJ3A-4	L	H	17-D

1174SBM1307A

13-7. Paper Separating Mechanism

Each Drawer has Fingers that separate the top sheet of paper from the rest of the paper stack at paper take-up. The Fingers are fitted to the right front and rear corners of the Drawer. When the Paper Take-Up Roll starts turning to take up the top sheet of paper, its turning force is directly transmitted to the top sheet of paper as it is in direct contact with the Paper Take-Up Roll. That force overcomes the block of the Fingers, causing the top sheet of paper to ride over the Fingers and be fed out of the Drawer into the copier.

As to the second sheet of paper, the paper transport force obtained through friction with the top sheet of paper is weak and does not allow the second sheet of paper to ride over the block of the Fingers. Hence, the second sheet of paper remains stationary with the rest of the paper stack in the Drawer.

When there are only two sheets of paper left in the Drawer, the bottom sheet can be fed with the top one if the friction of the Paper Lifting Plate is weak. The Friction Plate affixed to the Paper Lifting Plate prevents this from happening.

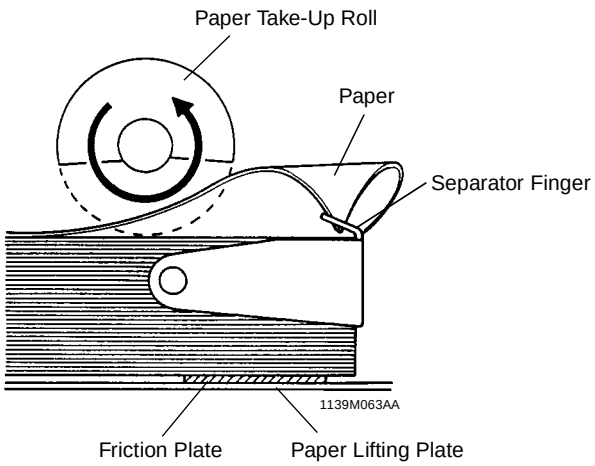

1174SBM1308A

13-8. Paper Take-Up Roll

Since the Paper Lifting Plate is raised at all times by the Paper Lifting Springs, paper is wedged in the mechanism when the Drawer is slid out of the copier if the Paper Take-Up Roll is round in shape. So the Take-Up Roll is semicircular and the circular part of the Roll is positioned on top at times other than take-up. For convenience, we call this position of the Paper Take-Up Roll the “retracted” position.

The Paper Take-Up Roll is grooved to keep good friction even under heavy loading. The 1st Drawer, which is a universal type to accommodate paper of different sizes, is provided with five (four in areas using only inch paper) Paper Take-Up Rolls. The 2nd Drawer accommodating paper of a fixed size only is equipped with two Rolls whose positions must be changed according to the paper size. (For the positions, see DIS/REASSEMBLY, ADJUSTMENT.)

The Paper Take-Up Roll is driven when the Paper Take-Up Solenoid is energized. The Roll is turned one complete turn for each single sheet of paper.

The Paper Take-Up Sensor is used to detect whether a sheet of paper has been properly taken up or not.

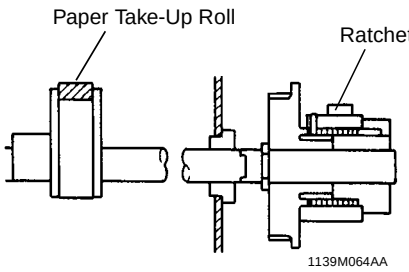

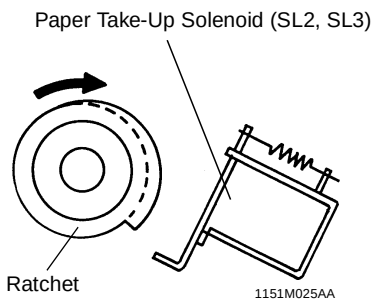

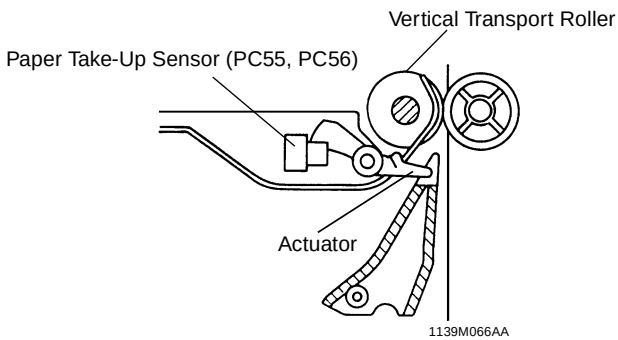

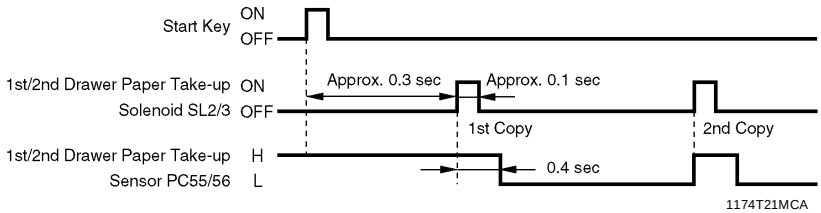

	Control Signal	Energized	Deenergized	WIRING DIAGRAM
SL2	PWB-A PJ4A-9	L	H	17-F
SL3	PWB-A PJ3A-2	L	H	17-D

	Control Signal	Blocked	Unblocked	WIRING DIAGRAM
PC55	PWB-A PJ4A-2	H	L	17-F
PC56	PWB-A PJ3A-7	H	L	17-E

1174SBM1309A

13-9. Paper Take-Up Retry Control

To minimize the occurrence of paper misfeed due to a slippery Paper Take-Up Roll, the Paper Take-Up Solenoid is energized a second time if a sheet of paper fails to reach the Paper Take-Up Sensor within T sec. after the solenoid has been deenergized. The solenoid is energized this second time 0.5 sec. after the above-mentioned period of T sec. has elapsed. (This is referred to as the paper take-up retry function.)

A misfeed results if the sheet of paper does not reach the Paper Take-Up Sensor even after three paper take-up sequences (initial take-up plus two retries).

Here is the control timing chart.

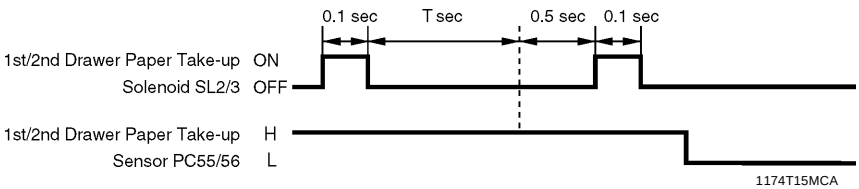

	1st Drawer	2nd Drawer
T	1.3 sec.	1.6 sec.

1174SBM1310A

13-10. VERTICAL PAPER TRANSPORT

The sheet of paper taken up by the Paper Take-Up Roll from the Drawer is fed along the Paper Guide to the Vertical Transport Rollers. The paper fed by the Vertical Transport Rollers reaches the Transport Rollers and is then fed up to the Synchronizing Rollers. The Transport Rollers are turned and stopped by the Paper Transport Clutch. The Transport Roller Sensor immediately before the Transport Rollers detects a sheet of paper fed from the Vertical Transport Section or Manual Bypass Table.

The Cover for the Vertical Transport Section (i.e., the Side Door) can be opened and closed for clearing misfeeds. The Side Door Detecting Sensor detects whether or not this Cover is open.

<23 cpm Copier>

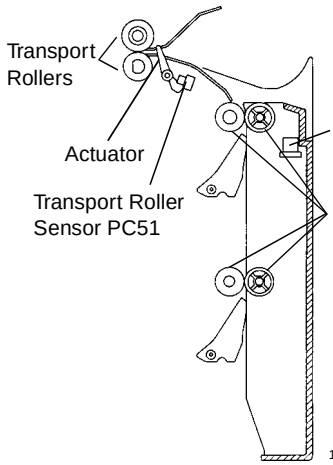

<15/18 cpm Copier>

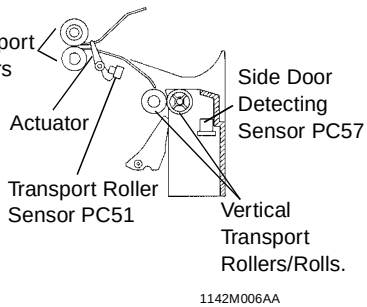

<Control>

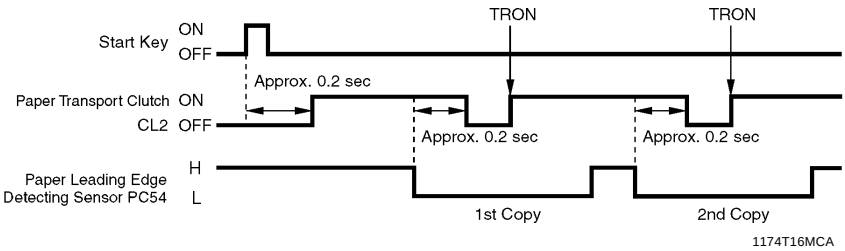

	Control Signal	Energized	Deenergized	WIRING DIAGRAM
CL2	PWB-A PJ5A-2A	L	H	4-B

	Control Signal	Blocked	Unblocked	WIRING DIAGRAM
PC54	PWB-A PJ17A-2A	L	H	4-D

1174SBM1400A

14 MULTI BYPASS TABLE

The optional Multi Bypass Table permits the user to make multiple copies (up to 50) on paper that cannot be fed automatically via any built-in paper drawer of the copier.
✻ Standard on 23 cpm copier, optional on 18 cpm copier and 15 cpm copier.

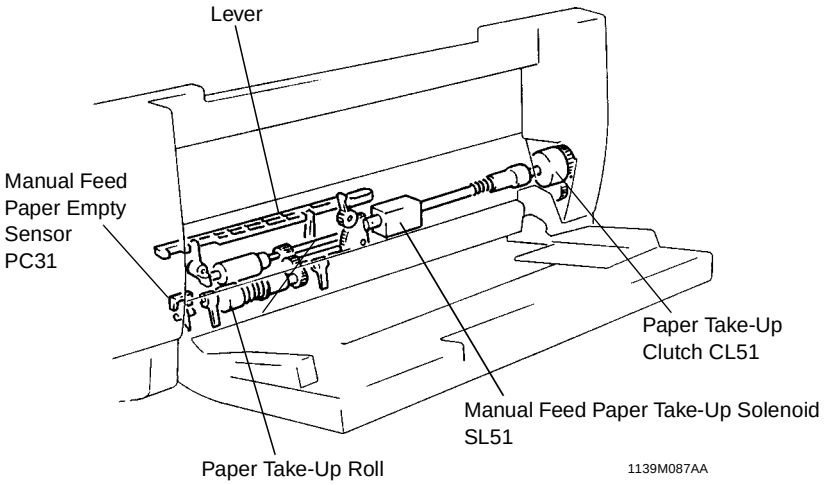

1174SBM1401A

14-1. Paper Take-Up Mechanism

The Paper Take-Up Rolls are normally in their raised (retracted) position so that they will not hamper proper loading of paper. When the Start Key is pressed, the Manual Feed Paper Take-Up Solenoid is deenergized causing the Paper Take-Up Rolls to press the paper stack downward and take up a sheet of paper.

Paper Stoppers are provided that block the leading edge of the paper stack as it is loaded on the Table, preventing any portion of the leading edge of the paper from getting inside. These Stoppers are unlocked at paper take-up, allowing paper into the copier.

Manual Feed Paper Take-Up Clutch controls the turning and stop of the Paper Take-Up Rolls.

In Standby

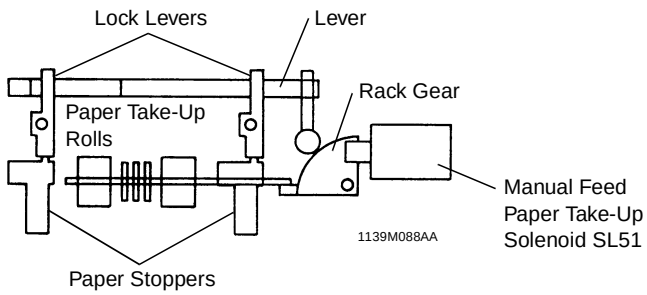

At Take-Up

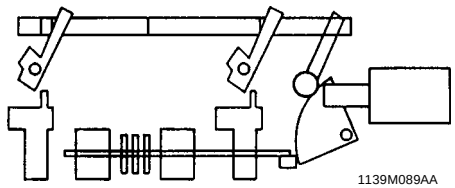

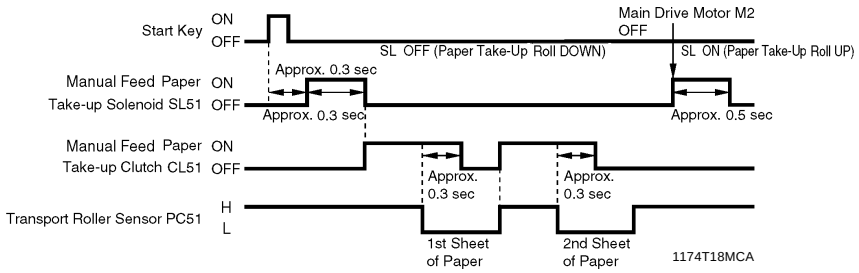

	Control Signal	Energized	Deenergized	WIRING DIAGRAM
CL51	PWB-A PJ5A-4B	L	H	17-H
SL51 DOWN	PWB-A PJ5A-2B	L	H	17-H
SL51 UP	PWB-A PJ5A-3B	L	H	

1174SBM1402A

14-2. Paper Take-Up Retry Control

To minimize the occurrence of a paper misfeed due to a slippery Paper Take-Up Roll, the Manual Feed Paper Take-Up Clutch is kept deenergized for a given period of time before it is energized again, if a sheet of paper fails to reach the Transport Roller Sensor even after the lapse of a given period of time after the clutch has first been energized. (This is referred to as the paper take-up retry function.)

A misfeed results if the sheet of paper does not reach the Transport Roller Sensor even after three paper take-up sequences (initial take-up plus two retries).

Here is the control timing chart.

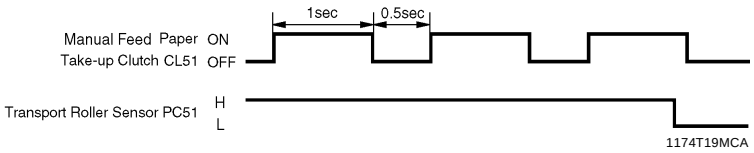

1174SBM1403A
14-3. Paper Separating Mechanism

The paper separating mechanism ensures that only the top sheet of paper is fed in by separating the second sheet of paper from the top one. This is accomplished by the Torque Limiter fitted to the Separator Roll shaft which stops the Separator Roll when there is a change in friction between the Feed and Separator Rolls.

1174SBM1404A
14-4. Paper Empty Detection

The Multi Bypass Table is equipped with a Manual Feed Paper Empty Sensor which detects a sheet of paper at the manual bypass port.

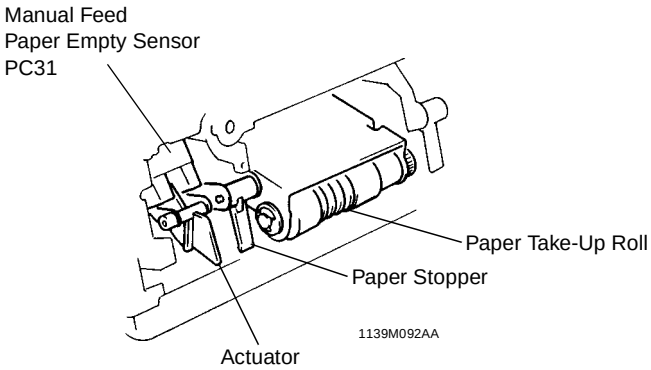

	Control Signal	Blocked	Unblocked	WIRING DIAGRAM
PC31	PWB-A PJ5A-6B	L	H	17-H

1174SBM1500A

15 SYNCHRONIZING ROLLERS

The Synchronizing Rollers, operating in phase with the Scanner's scan motion and paper feeding, synchronize the leading edge of the copy paper accurately with the leading edge of the toner image on the PC Drum.

The Upper Synchronizing Roller is a metal roller covered with a polyvinyl chloride tubing, while the Lower one is a rubber roller.

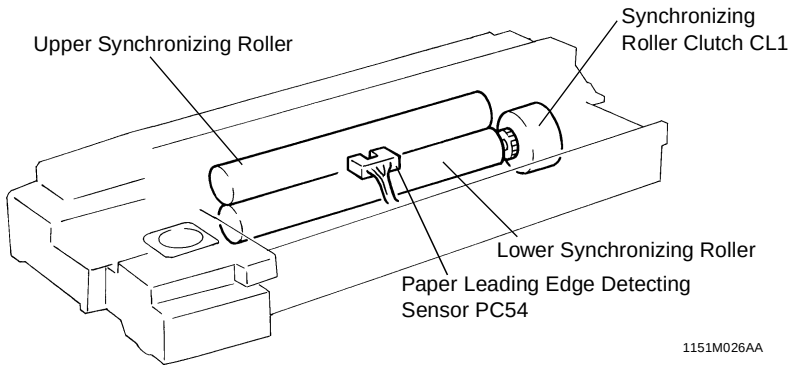

To facilitate clearing of misfeeds, the Upper Synchronizing Roller is installed in the Imaging Unit. It is fitted to the Guide Frame of the Imaging Unit and the Compression Springs at the front and rear ends press the Roller downward so that it makes contact with the Lower Synchronizing Roller. The Lower Roller is driven by the drive source, while there is a gear train that transmits the rotation of the Lower Roller to the Upper Roller, thus ensuring good paper transport performance.

To ensure good image transfer during conditions of high humidity, the Pre-Synch Guide Plate is electrically floated by a plastic spacer, grounded through an 82MΩ resistor and 1kV varistor.

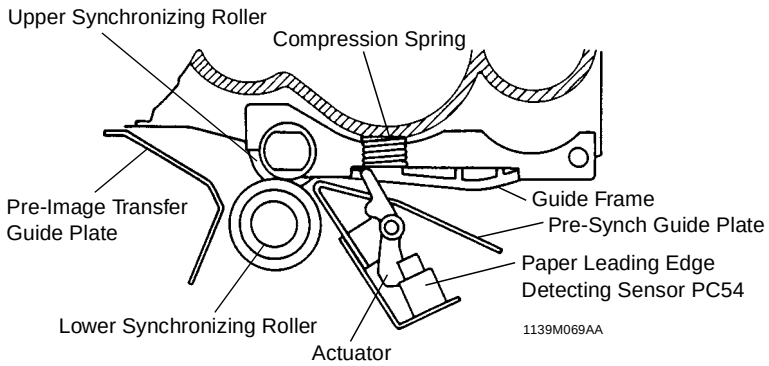

1174SBM1501A
15-1. Upper Synchronizing Roller Positioning

Since the Upper Synchronizing Roller is fitted to the Imaging Unit, it must be correctly positioned with reference to the Lower Synchronizing Roller when the Upper Half of the copier is swung down into the locked position. For this purpose, slits are cut in the lower copier frame and the Bushings of the Upper Synchronizing Roller fit into these slits.

The Upper Synchronizing Roller is grounded through the Bushings which are in contact with the frame. To positively ground the Roller, the Ground Plate fitted to the lower frame makes contact with the Shaft of the Upper Synchronizing Roller.

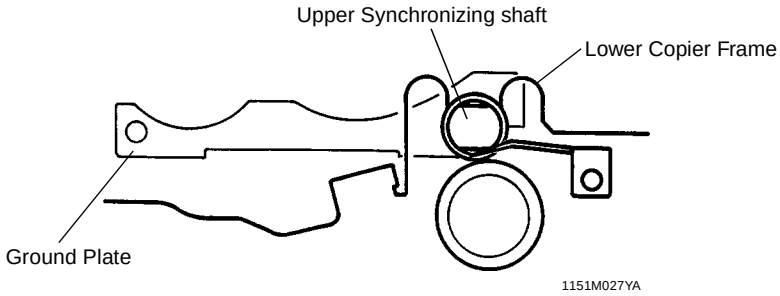

1174SBM1502A
15-2. Paper Dust Remover

The Paper Dust Remover is installed so that it makes contact with the Upper Synchronizing Roller. Since the Upper Synchronizing Roller is covered with a vinyl tubing, triboelectric charging occurs as the Roller turns in contact with the Paper Dust Remover. As paper is then fed between the Synchronizing Rollers, the charges on the tubing attract paper dust from the paper. The dust is then transferred onto the Paper Dust Remover.

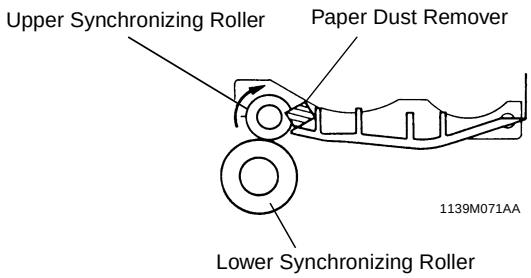

1174SBM1503A

15-3. Synchronizing Roller Control

The Synchronizing Rollers are started as the Synchronizing Roller Clutch is energized upon reception of a signal from the Master Board.

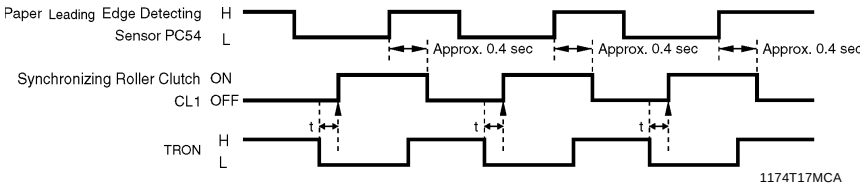

t: The value of t depends on the settings made in Adjust Mode.

	Control Signal	Energized	Deenergized	WIRING DIAGRAM
CL1	PWB-A PJ5A-4A	L	H	4-A

	Control Signal	Blocked	Unblocked	WIRING DIAGRAM
PC54	PWB-A PJ17A-2A	L	H	4-D

1174SBM1600A

16 IMAGE TRANSFER AND PAPER SEPARATION

Image Transfer

The Image Transfer Corona applies a DC negative corona emission to the underside of the paper thereby attracting the positively charged toner onto the surface of the paper to form a visible, developed image of the original. The Corona Unit is provided with a Corona Wire cleaning mechanism: the operator has only to pull out the Lever on which the Cleaner is mounted from the front of the copier, which cleans the Wire.

Paper Separation

The Paper Separator Corona showers the underside of the paper with both positive and negative charges so that the paper can be easily separated from the PC Drum. In addition, two Paper Separator Fingers physically peel the paper off the surface of the PC Drum. (For details, see PAPER SEPARATOR FINGERS.)

The Image Transfer/Paper Separator Coronas Unit is provided with a Pre-Image Transfer Guide Plate that determines the angle at which the paper comes into contact with the PC Drum and keeps an optimum distance between the paper and the PC Drum so that the image may be properly transferred onto the paper.

The Image Transfer/Paper Separator Coronas Unit is grounded via a 2.6MΩ resistor, which improves its efficiency to discharge to the PC Drum side, thus reducing the output current from the High Voltage Unit.

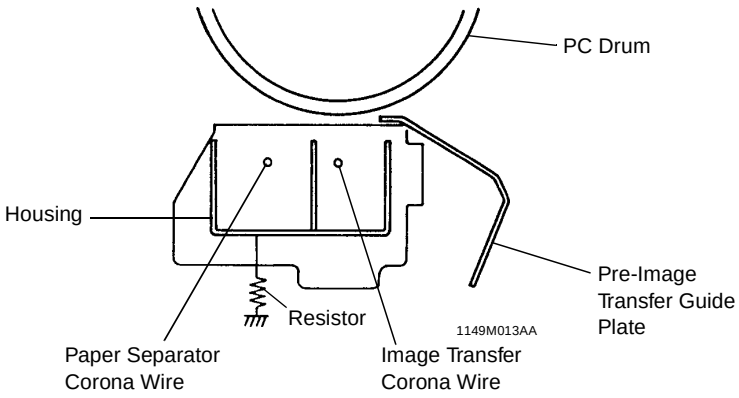

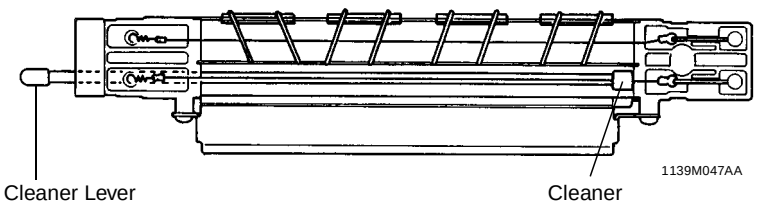

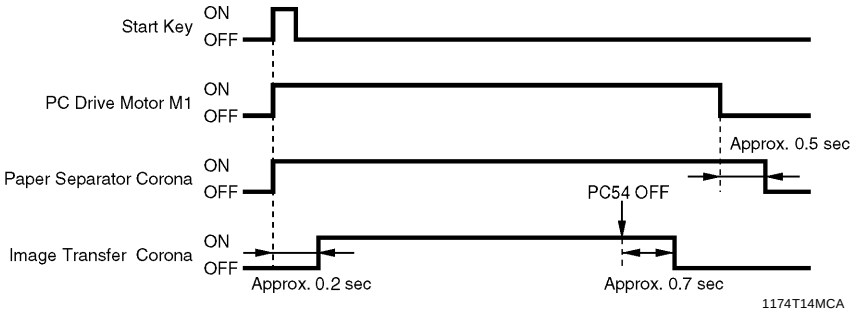

	Control Signal	ON	OFF	WIRING DIAGRAM
Image Transfer Corona	PWB-A PJ11A-9A	L	H	4-C
Paper Separator Corona	PWB-A PJ11A-8A	L	H	4-C

1174SBM1700A

17 MAIN ERASE LAMP

The Main Erase Lamp is turned ON to neutralize any surface potential remaining on the surface of the PC Drum after cleaning.

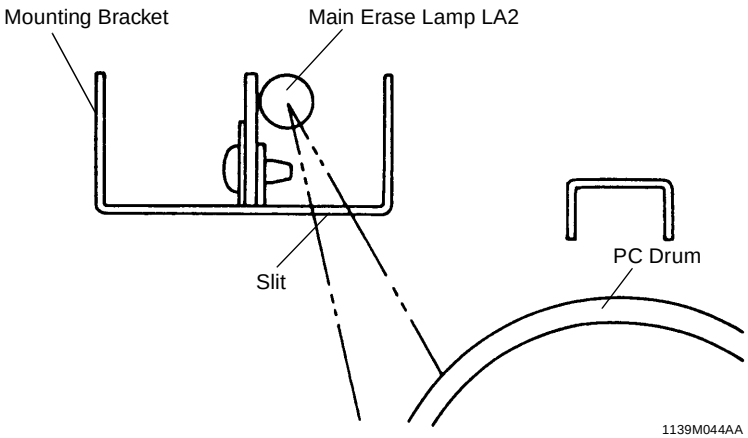

The Main Erase Lamp consists of five tungsten-filament lamps mounted on a Board.

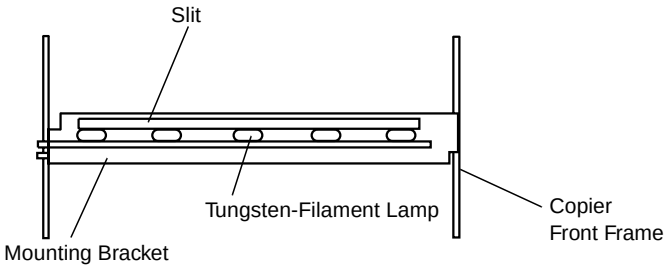

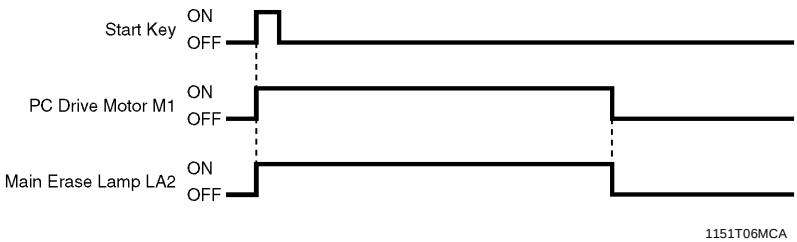

	Control Signal	ON	OFF	WIRING DIAGRAM
LA2	PWB-A PJ10A-7	H	L	2-I

1174SBM1800A

18 PAPER SEPARATOR FINGERS

After image transfer, an AC corona emission is applied to the underside of the paper by the Paper Separator Corona to neutralize the paper so that it can be easily separated from the PC Drum. To further ensure that the paper is positively separated from the PC Drum, there are two Paper Separator Fingers attached to the Imaging Unit. They physically peel the paper off the surface of the PC Drum.

The Paper Separator Fingers are made of plastic and are kept in constant contact with the surface of the PC Drum.

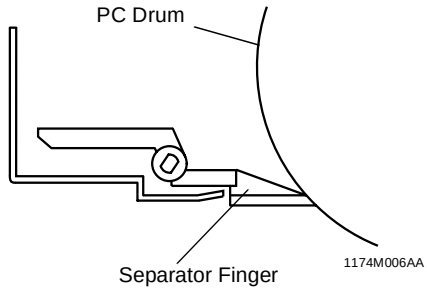

The Paper Separator Fingers are also moved back and forth over a given distance so that they will make contact with a wider surface area of the PC Drum, thus preventing localized damage to the PC Drum surface. This lateral movement is done by the Lever connected to the Cleaning Blade and, when the Cleaning Blade is moved, the Separator Fingers are also moved back and forth.

✻ Lateral Movement: 3.7 mm

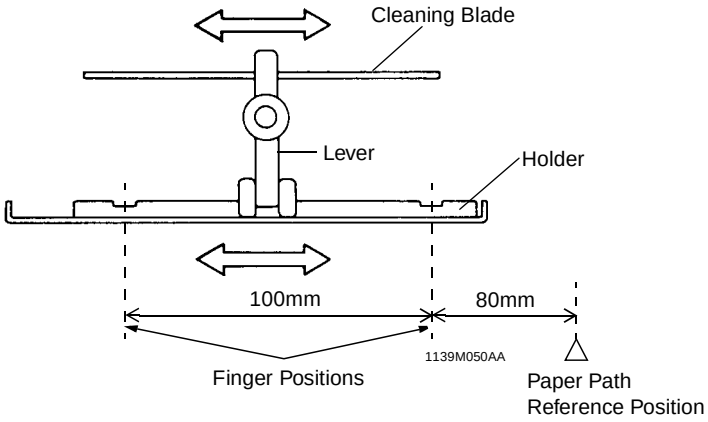

1174SBM1900A

19 CLEANING UNIT

The Cleaning Blade is pressed tightly against the surface of the PC Drum and scrapes off any toner remaining on the surface after image transfer and paper separation have been completed.

The Cleaning Blade is moved back and forth to prevent the PC Drum from deteriorating and the Cleaning Blade from warping away from the surface of the PC Drum.

A Toner Antispill Mylar is affixed to the Imaging Unit. It prevents toner scraped off the surface of the PC Drum from falling down onto the surface of the copy paper or the paper path.

In addition, a Side Seal and Brush Seal are affixed to both ends of the Imaging Unit on both sides of the Cleaning Blade. They prevent toner from spilling from both ends of the Cleaning Blade.

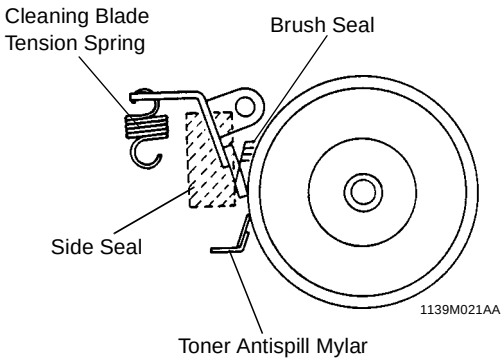

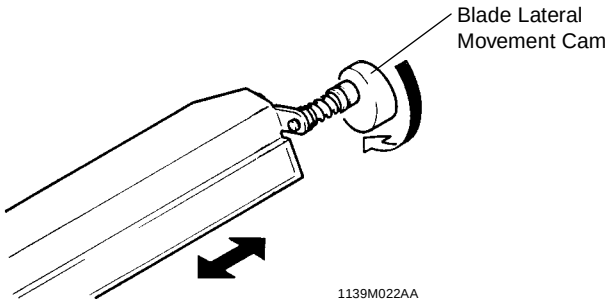

1174SBM1901A

19-1. Cleaning Bias

✻ Except the U.S.A., Canada, and Europe

A Cleaning Bias Seal is installed to minimize damage to the PC Drum from acid paper.

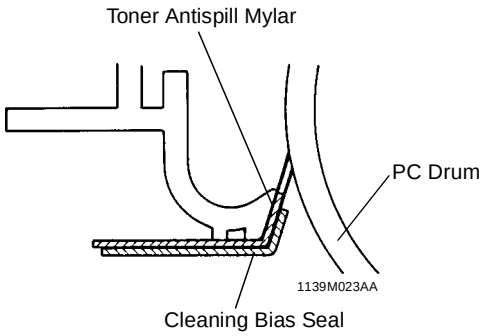

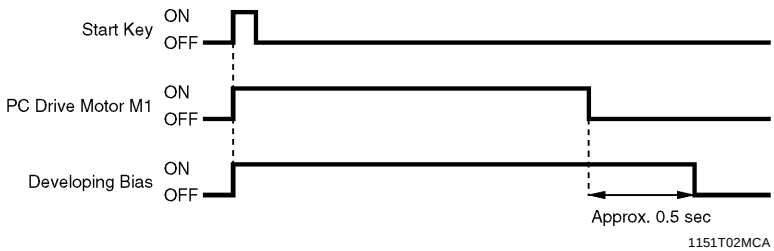

	Control Signal	ON	OFF	WIRING DIAGRAM
Cleaning Bias	PWB-A PJ11A-8A	L	H	2-H

1174SBM2000A

20 PAPER TRANSPORT

After having gone through the image transfer and paper separation processes, the paper is then transported to the Fusing Unit by the Suction Belts of the Suction Deck driven directly by the Main Drive Motor.

The Suction Fan Motor draws the paper onto the turning Suction Belts for positive transport of the paper.

The Suction Fan Motor is turned on/off at the same timing as the Main Motor.

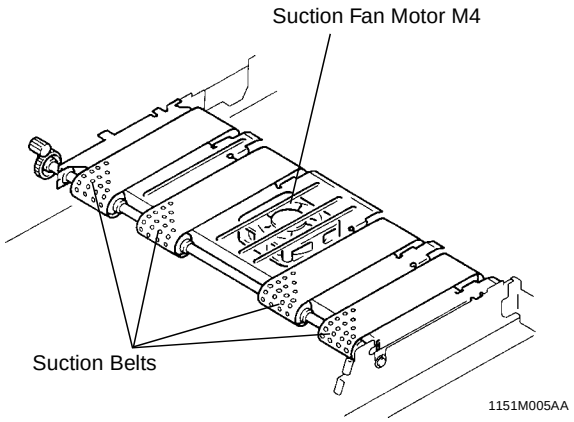

	Control Signal	Energized	Deenergized	WIRING DIAGRAM
M2	PWB-A PJ11A-14A	L	H	25-F
M4	PWB-A PJ5A-9A	L	H	4-B

1174SBM2100A

21 FUSING UNIT

The Upper Fusing Roller and Lower Fusing Roller together apply heat and pressure to the toner and paper to permanently fix the developed image to the paper.

Drive for the Upper Fusing Roller is transmitted from the Main Drive Motor to the Upper Fusing Roller Drive Gear. The Lower Fusing Roller and Cleaning Roller are driven by the respective Rollers in contact with them.

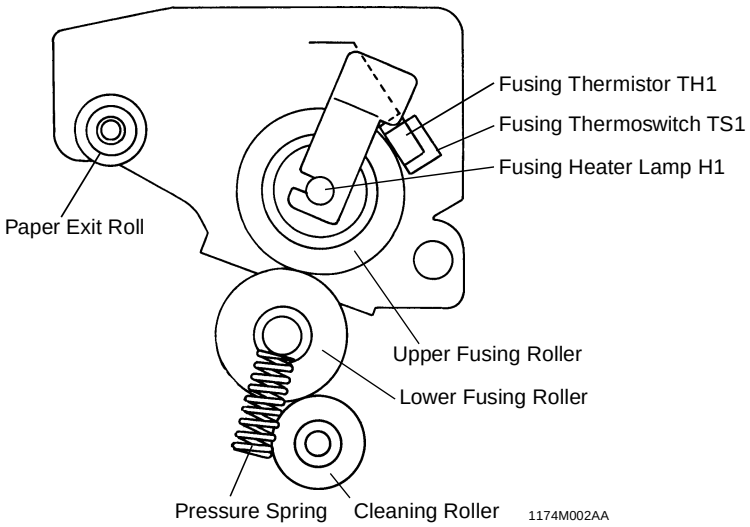

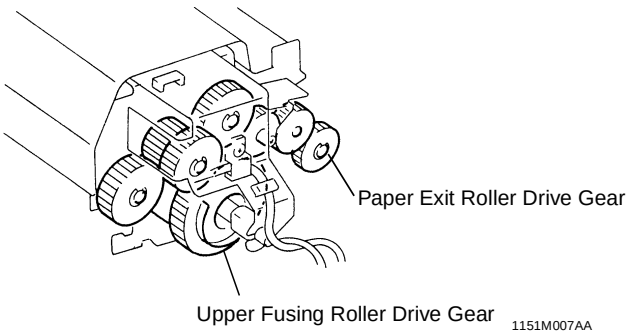

1174SBM2101A

21-1. Fusing Temperature Control

The Upper Fusing Roller is heated by a Fusing Heater Lamp which is an AC halogen lamp. The Fusing Thermistor installed on the Upper Fusing Roller helps keep the optimum fusing temperature.

The fusing temperature is normally controlled at 195°C. To ensure good fusing performance, however, even when the Lower Fusing Roller remains cool immediately after warm-up in the early morning, the temperature is controlled as follows when the copier is turned ON:

✻ If the initial fusing temperature is less than 90°C:
Temperature is controlled at 205°C for 3 min. after the copier has completed warming up, which is followed by a temperature control at 195°C.

✻ If the initial fusing temperature is less than 150°C:
Temperature is controlled at 205°C for 1 min. after the copier has completed warming up, which is followed by a temperature control at 195°C.

✻ If the initial fusing temperature is more than 150°C:
Temperature is controlled at 195°C after the copier has completed warming up.

TH1 is positioned at a point 84 mm from the paper path reference position, thereby preventing offset caused by low temperature and degraded fusing performance for small-size paper.

The control temperature in the Energy Saving Mode is 100°C.

The Fusing Thermoswitch, installed above the Upper Fusing Roller, cuts off the power to the Fusing Unit if the temperature of the Upper Fusing Roller becomes excessively high. It eliminates the possibility of a fire that could occur when the Fusing Heater Lamp remains ON due to a faulty temperature control circuit.

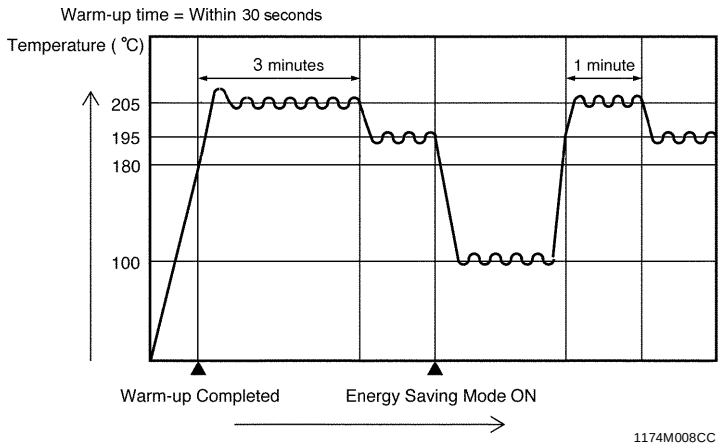

1174SBM2102A

21-2. Fusing Rollers Pressure Mechanism

Pressure Springs are installed at both ends of the Lower Fusing Roller. These springs contact the bearings mounted on both ends of the Lower Fusing Roller and exert pressure through the Lower Fusing Roller to the Upper Fusing Roller which is installed in the Fusing Unit.

The Fusing Unit is divided into an upper and a lower half, and the upper half can be swung open. The Upper Half of the copier, when locked in position, presses the upper half of the Fusing Unit down onto its lower half.

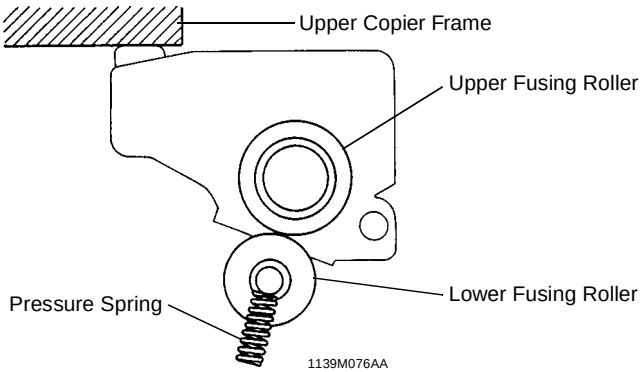

1174SBM2103A

21-3. Cleaning Roller

The Cleaning Roller is made up of a core aluminum roller around which a high temperature resistant paper based material is wound. As well as serving to clean the surface of the Upper and Lower Fusing Rollers, the Cleaning Roller also ensures that the temperature along the entire length of the Fusing Rollers does not rise excessively when, for example, continously feeding small size paper.

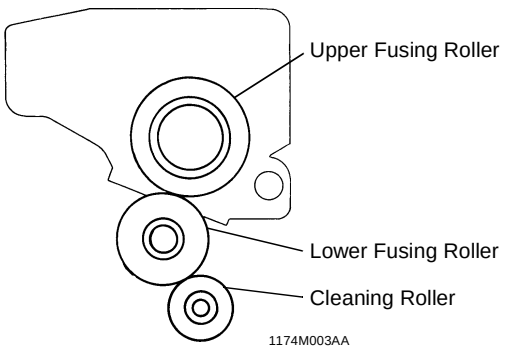

1174SBM2200A

22 EXIT UNIT

The Paper Exit Roller/Rolls feed the paper, to which the developed image has been fixed, out of the Fusing Unit onto the Copy Tray. The Charge Neutralizing Brush touches the surface of the sheet of paper being fed out of the Fusing Unit to neutralize any static charge left on it. The Upper and Lower Separator Fingers strip the paper from the surface of the Upper/Lower Fusing Rollers.

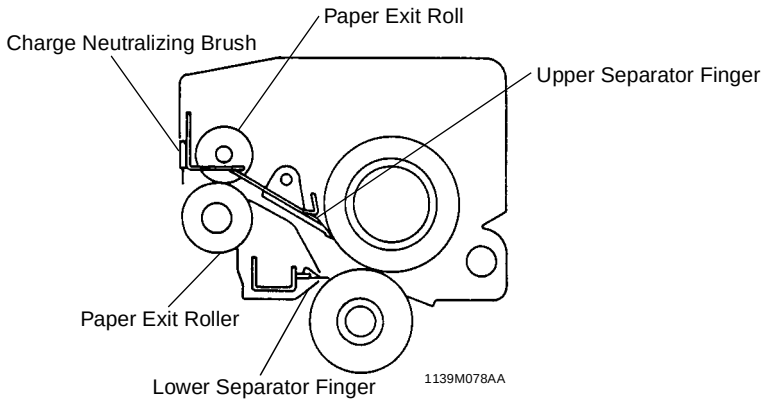

1174SBM2201A

22-1. Upper/Lower Separator Fingers

The Upper and Lower Separator Fingers are laid out as shown below to cope with many different paper sizes.

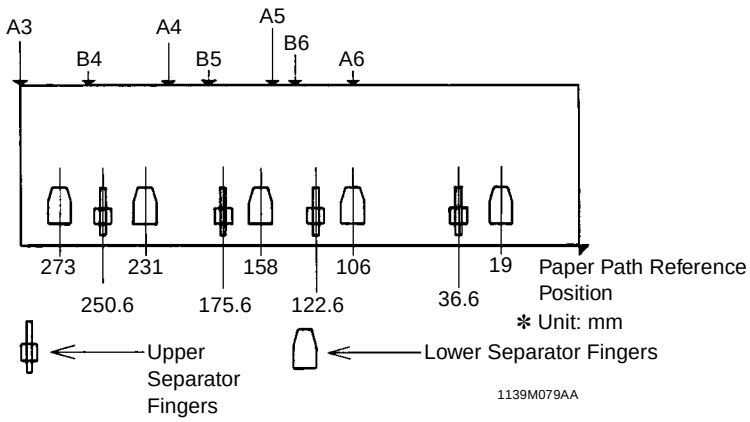

1174SBM2202A

22-2. Paper Exit Sensor

1st Paper Exit Sensor installed in the paper exit section of the lower half of the copier detects the sheet of paper being fed out of the Fusing Unit onto the Copy Tray.

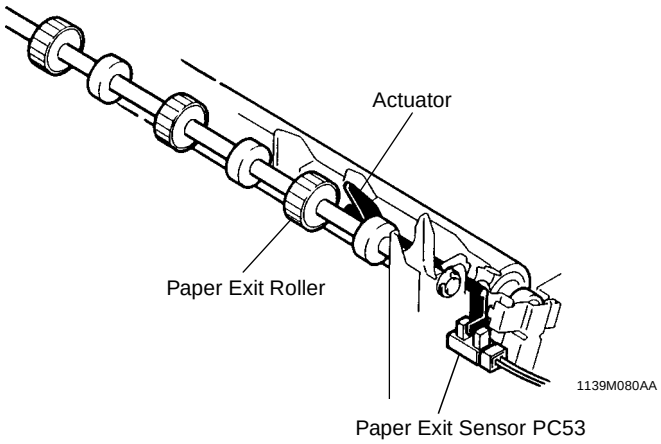

	Control Signal	Blocked	Unblocked	WIRING DIAGRAM
PC53	PWB-A PJ17A-8A	L	H	2-B

1174SBM2300A

23 EXIT/DUPLEX SWITCHING UNIT (OPTION)

If the copier is configured with an optional Sorter or Staple Sorter, or Duplex Unit (installed in the Cabinet), the Exit/Duplex Switching Unit must be fitted to the exit section of the copier.

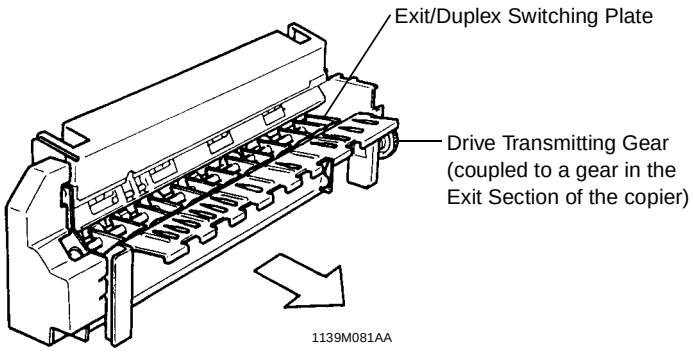

The Master Board outputs a signal to energize the Exit/Duplex Switching Solenoid, which switches the position of the Exit/Duplex Switching Plate. The Unit has a 2nd Paper Exit Sensor built into it which detects a sheet of paper being fed out of the Unit. (For more details of switching control, see the Service Manual for “DUPLEX UNIT.”)

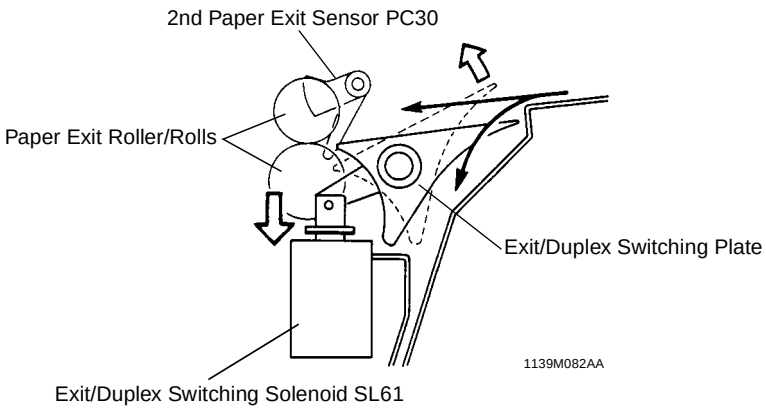

1174SBM2400A

24 DEHUMIDIFYING SWITCH (OPTION)

To prevent image transfer efficiency from being reduced due to damp paper in highly humid weather, a Paper Dehumidifying Heater is installed on the base frame of the copier under the 2nd Drawer.

A Drum Dehumidifying Heater is located under the Lower Guide Plate to prevent the PC Drum from forming condensation.

Both Drum and Paper Dehumidifying Heaters are ON when the Dehumidifying Switch is ON and the power cord plugged in. They are OFF it the Dehumidifying Switch is OFF.

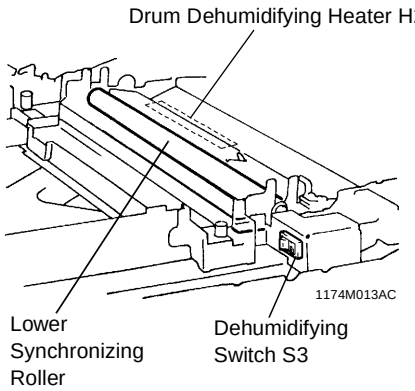

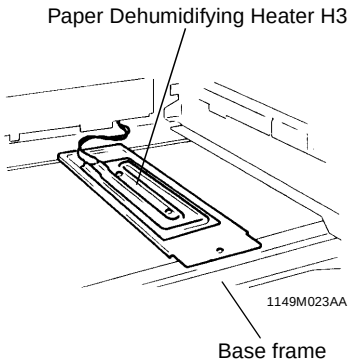

1174SBM2500A

25 COOLING FAN

Ozone produced by the PC Drum Charge Corona and Image Transfer/Paper Separator Coronas is drawn out of the copier by the Cooling Fan Motor and absorbed by the Ozone Filter.

The Cooling Fan Motor is turned either at high or low speed. It turns at high speed during the time the main motor is on and for 3 seconds after the power switch is turned on.

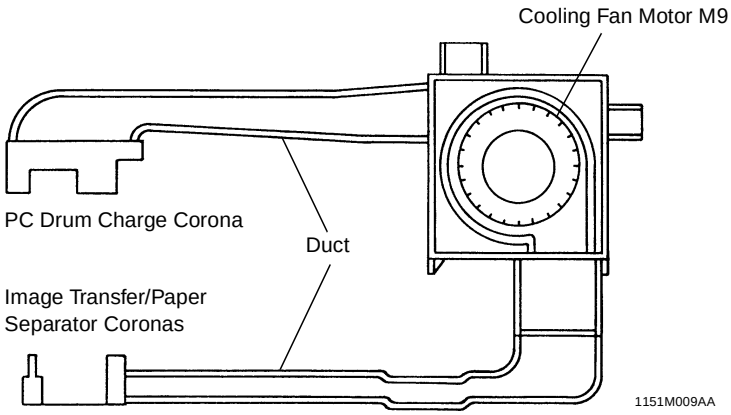

	Control Signal	Energized	Deenergized	WIRING DIAGRAM
M9	PWB-A PJ20A-3	H	L	11-A

1174SBM2600A

26 OPTICAL SECTION COOLING FAN

The Optical Section Cooling Fan Motor draws outside air into the copier and blows it against the Original Glass which is heated by the lit Exposure Lamp.

The Filter at the intake port of the Fan prevents dust and dirt from entering the Optical Section of the copier.

The Optical Section Cooling Fan Motor turns only while the Main Drive Motor is being energized.

<23 cpm copier>

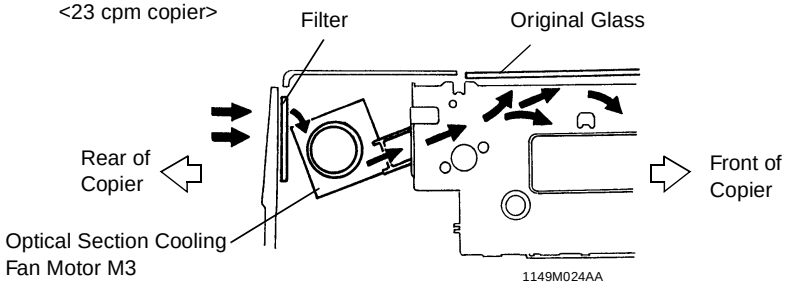

1149M024AA

<15/18 cpm copier>

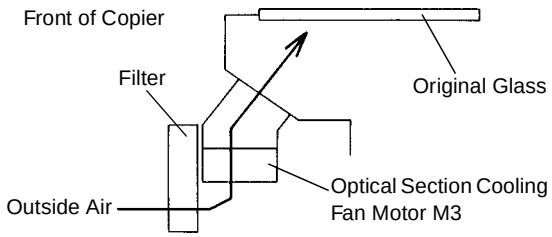

1139M095AA

	Control Signal	Energized	Deenergized	WIRING DIAGRAM
M3	PWB-A PJ22A-2	L	H	5-F/5-G

1174SBM2700A

27 MEMORY BACKUP

IC1 (RAM) of the RAM Board connected to the Master Board stores the setting/adjustment values set in the Tech. Rep. Modes as well as the counter counts. The Backup Battery is mounted on the RAM Board to prevent the contents of memory from being lost when the power cord is unplugged or the RAM Board removed from the copier. The Backup Battery requires a voltage of 2V or more to retain the contents of memory.

Important
As noted above, the RAM stores critical data. If the RAM Board has been replaced with a new one, memory must first be cleared and then all settings be made again. It should also be noted that the RAM Board should not be replaced at the same time when the Master Board is replaced.