EP1054/EP1085/EP2030

SWITCHES ON PWBs/ TECH. REP. SETTINGS

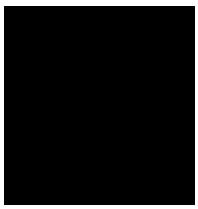

MINOLTA

CONTENTS

1. PRECAUTIONS FOR HANDLING THE PWBs ..... S-I
1-I. Precautions for Transportation and Storage ..... S-I
1-2. Precautions for Replacement and Inspection ..... S-I
2. CONTROL PANEL KEYS AND INDICATORS S-2
2-I. 15 cpm Copier s-2
2-2. 18 cpm Copier s-4
2-3. 23 cpm Copier S-6
3. FUNCTIONS OF SWITCHES AND OTHER PARTS ON PWBs S-8
3-I. PWB Location S-8
3-2. Tech. Rep. Setting Switches Board S-8
4. USER MODE ..... S-IO
4-I. Functions Available from the User Mode s-10
4-2. User Mode Setting Procedure ..... S-IO
4-3. User Mode Setting Details ..... S-I 1
5. SERVICE MODE S-16
5-I. Service Mode Function Tree ..... S-I 6
5-2. Entering the Service Mode s-17
5-3. Settings in the Service Mode S-18
(1) Test S-18
(2) Tech. Rep. Choice s-20
(3) Altering Fixed Zoom Ratios (For 23 cpm Copier Only) S-25
(4) PM Counter and Ports/Options Counter S-25
(5) Paper Size Counter S-26
(6) Misfeed Counter S-27
(7) Malfunction Counter S-28
(8) Parts/Supplies Life Counter s-29
(9) Paper Size Input (For 23 cpm Copier Only) s-30
(10) Display s-30
6. ADJUST MODE s-31
6-I. Functions Available in the Adjust Mode S-31
6-2. Entering the Adjust Mode s-31
6-3. Settings in the Adjust Mode S-32
7. FUNCTION SETTING REQUIREMENTS AT REPLACEMENT OF PARTS ..S-3 4

1 PRECAUTIONS FOR HANDLING THE PWBs

1-1. Precautions for Transportation and Storage

A. Before transporting or storing the PWBs, put them in protective conductive cases or bags so that they are not subjected to high temperature (and they are not exposed to direct sunlight).
B. Protect the PWBs from any external force so that they are not bent or damaged.
C. Once the PWB has been removed from its conductive case or bag, never place it directly on an object that is easily charged with static electricity (such as a carpet or plastic bag).
D. Do not touch the parts and printed patterns on the PWBs with bare hands.

1-2. Precautions for Replacement and Inspection

A. Whenever replacing the PWB, make sure that the power cord of the copier has been unplugged.
B. When the power is on, the connectors should never be plugged in or unplugged.
C. Use care not to strap the pins of an IC with a metal tool.
D. When touching the PWB, wear a wrist strap and connect its cord to a securely grounded place whenever possible. If you cannot wear a wrist strap, touch the metal part to discharge static electricity before touching the PWB.

2 CONTROL PANEL KEYS AND INDICATORS

✻ For more details, see the “Operator’s Manual” shipped with the copier.

2-1. 15 cpm Copier

1. 10-Keys
- Numeric keypad used for setting the number of copies to be made, zoom ratio, and Tech. Rep. mode settings.

2. Clear Key
- Clear the number-of-copies setting, zoom ratio, choice modes setting.

3. Energy Saver Key
- Sets the copier into the Energy Saver mode.

4. Panel Reset Key
- Resets the copier to the initial mode.

5. Stop Key
- Stops a multi-copy cycle or a test (F*) operation.

6. Start Key
- Starts a multi-copy cycle or a test (F*) operation.

7. Zoom Ratio Select Key
- Selects a fixed zoom ratio.

8. Zoom Up/Down Keys
- Changes the zoom ratio manually.

9. Auto Exposure Mode Key
- Selects either the Auto or Manual Exposure, or Photo mode.

10. Exposure Control Keys
- Selects the exposure level.

11. Paper Select Key
- Selects the paper source.

12. Book Key
- Selects the Book mode.

13. Drum Dehumidify Key
- Runs a Drum Dehumidify cycle.

14. Auxiliary Toner Replenishing Key
- Starts an auxiliary toner replenishing sequence.

15. Meter Count Key
- Gives a display of the current copy count.

NOTE
15 cpm Copier is Except for U.S.A. and Canada Areas.

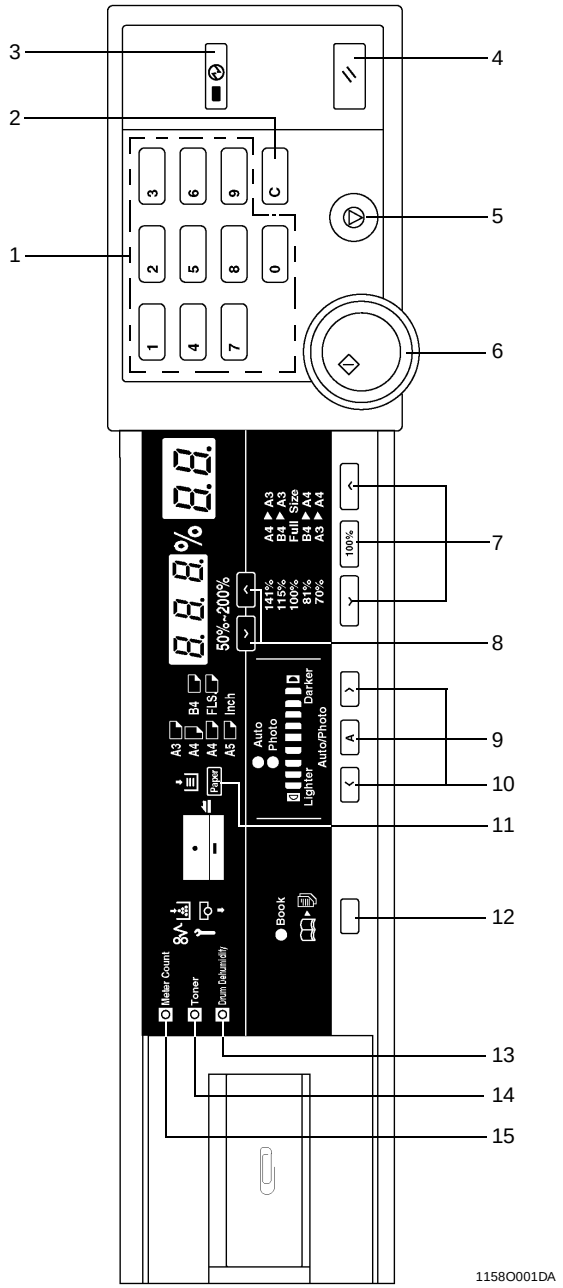
3
4
2
1
5
6
7
8
9
10
11
12
13
14
15
1158O001DA

✻ For more details, see the “Operator’s Manual” shipped with the copier.

2-2. 18 cpm Copier

1. 10-Keys
- Numeric keypad used for setting the number of copies to be made, and Tech. Rep. mode settings.

2. Clear Key
- Clear the number-of-copies setting, choice modes setting.

3. Energy Saver Key
- Sets the copier into the Energy Saver mode.

4. Panel Reset Key
- Resets the copier to the initial mode.

5. Stop Key
- Stops a multi-copy cycle or a test (F*) operation.

6. Start Key
- Starts a multi-copy cycle or a test (F*) operation.

7. Zoom Ratio Select Key
- Selects a fixed zoom ratio.

8. Zoom Up/Down Keys
- Changes the zoom ratio manually.

9. Auto Exposure Mode Key
- Selects either the Auto or Manual Exposure, or Photo mode.

10. Exposure Control Keys
- Selects the exposure level.

11. Paper Select Key
- Selects the paper source.

12. Book Key
- Selects the Book mode.

13. Finishing Mode Select Key
- Selects the Sort mode.

14. Auto Size Key
- Selects the Auto Size mode.

15. Drum Dehumidify Key
- Runs a Drum Dehumidify cycle.

16. Auxiliary Toner Replenishing Key
- Starts an auxiliary toner replenishing sequence.

17. Meter Count Key
- Gives a display of the current copy count.

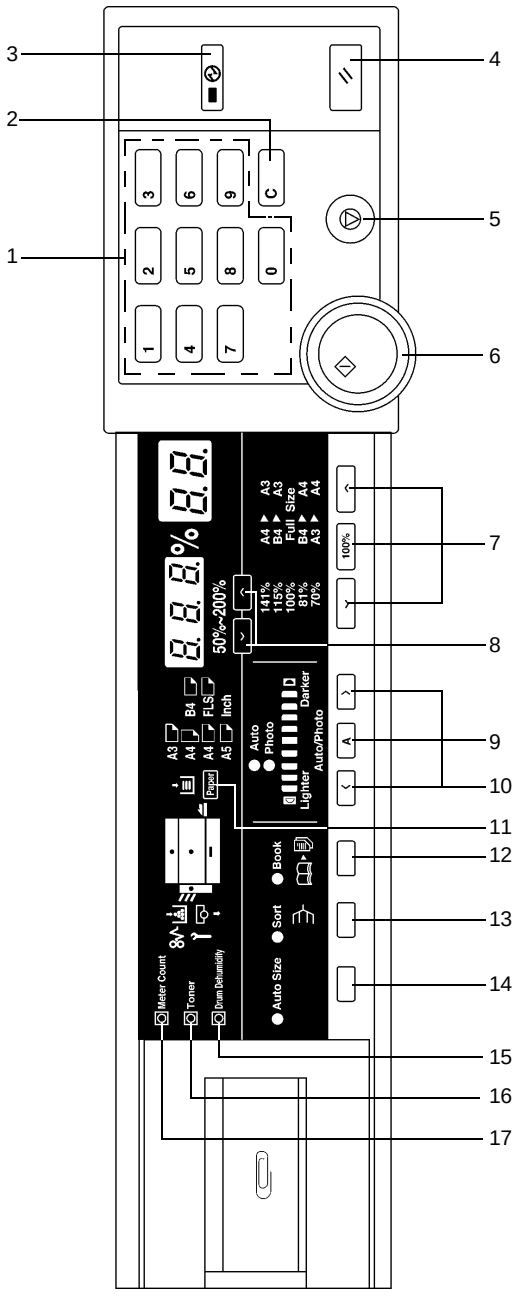
3
4
2
1
5
6
7
8
9
10
11
12
13
14
15
16
17
1174S001AA

✻ For more details, see the “Operator’s Manual” shipped with the copier.

2-3. 23 cpm Copier

1. 10-Keys
- Numeric keypad used for setting the number of copies to be made, zoom ratio, and Tech. Rep. mode settings.

2. Clear Key
- Clear the number-of-copies setting, zoom ratio, choice modes setting.

3. Energy Saver Key
- Sets the copier into the Energy Saver mode.

4. Interrupt Key
- Sets the copier into, or lets it leave, the Interrupt mode.

5. Panel Reset Key
- Resets the copier to the initial mode.

6. Stop Key
- Stops a multi-copy cycle or a test (F*) operation.

7. Start Key
- Starts a multi-copy cycle or a test (F*) operation.

8. Paper Select Key
- Selects the paper source.

9. Zoom Ratio Select Key
- Selects a fixed zoom ratio.

10. Zoom Up/Down Keys
- Changes the zoom ratio manually.

11. Auto Exposure Mode Key
- Selects either the Auto or Manual Exposure, or Photo mode.

12. Exposure Control Keys
- Selects the exposure level.

13. Mixed Original Detection Key
- Selects the Mixed Original mode.

14. Orig. ▶ Copy Key
- Selects the original-and-copy type.

15. Manual Staple Key
- Effects manual stapling of copies.

16. Finishing Key
- Selects the finishing type.

17. Auto Size Key
- Selects the Auto Size mode.

18. File Margin Key
- Selects the Margin mode.

19. Cover Key
- Selects the Cover mode.

20. Job Memory Select Key
- Calls up a job program previously stored in memory.
- Stores a job program when used in combination with the Input key.

21. Job Memory Input Key
- Stores a job program in, or erases it from, memory.

22. Drum Dehumidify Key
- Runs a Drum Dehumidify cycle.

23. Auxiliary Toner Replenishing Key
- Starts an auxiliary toner replenishing sequence.

24. Meter Count Key
- Gives a display of each of the current counts of different electronic counters of the copier.

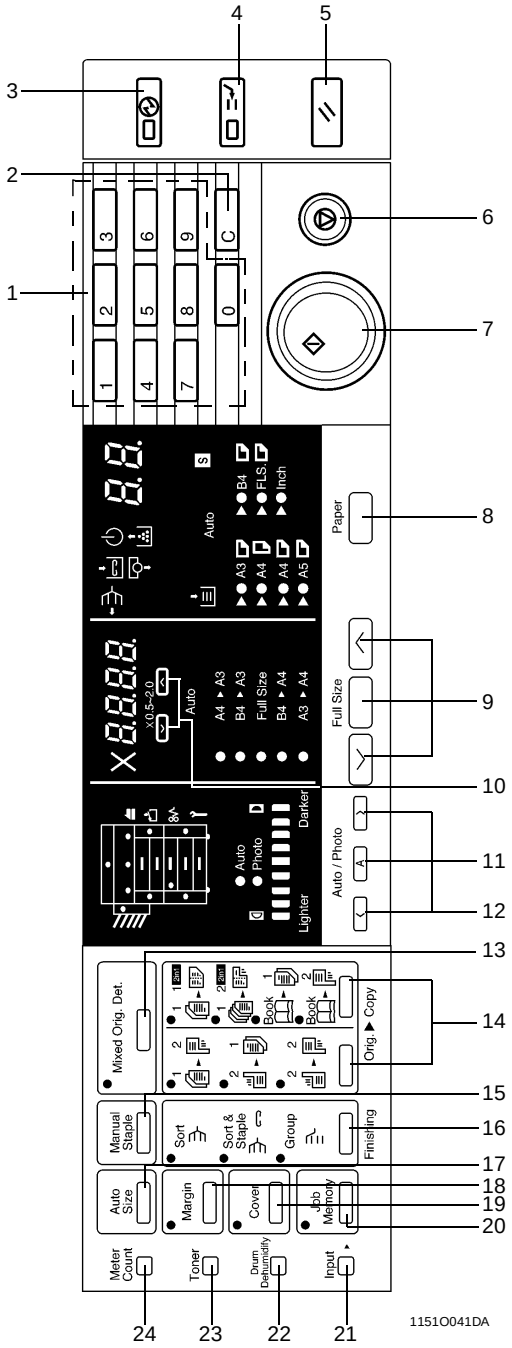
1
2
3
4
5
6
7
8
9
10
11
12
13
14
15
16
17
18
19
20
21
22
23
24
1151O041DA
Paper
Full Size
Auto / Photo
Darker
Lighter
Auto
Photo
Mixed Orig. Det.
Orig. ▲ Copy
Manual Staple
Sort
Sort & Staple
Group
Finishing
Auto Size
Margin
Cover
Job Memory
Meter Count
Toner
Drum Dehumidify
Input

3 FUNCTIONS OF SWITCHES AND OTHER PARTS ON PWBs

3-1. PWB Location

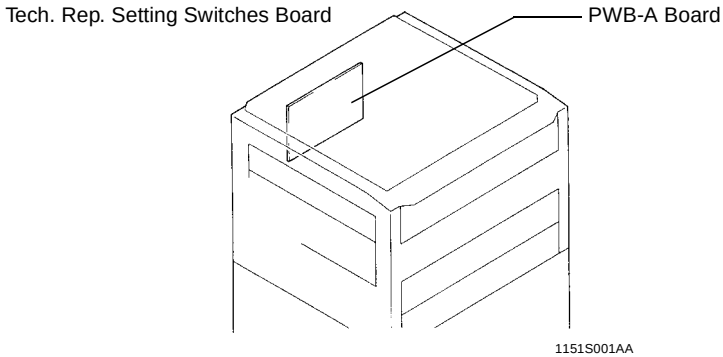

3-2. Tech. Rep. Setting Switches Board

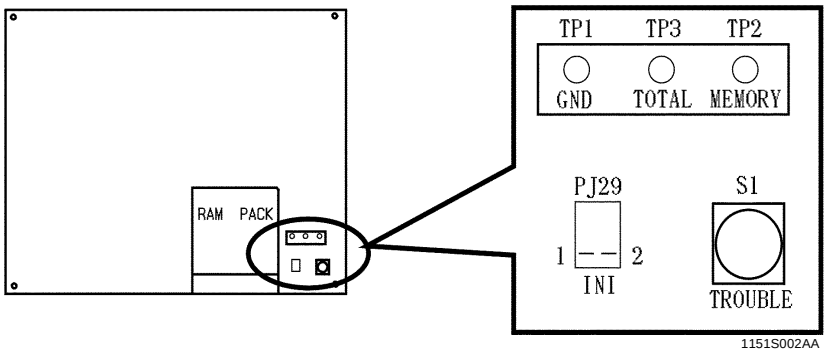

Symbol	Name	Description
S1	Trouble Reset Switch	Resets all malfunctions including Exposure Lamp (C04XX) and fusing (C05XX) malfunctions.
PJ2	Initialize Points	Forcibly resets a misfeed or malfunction that occurred due to incorrect operation, etc. when it cannot be reset by opening and closing the Front Door and turning ON S1.
TP1	GND Test Point	Ground terminal used for memory clear.
TP2	Memory Clear Test Point	Initializes all data except those counted by the electronic counters.

<Clearing Procedures>
- Initialize Points PJ2

1. Turn OFF the Power Switch.
2. With PJ2 closed, turn ON the Power Switch.
3. In approx. 5 sec., open PJ2.

- Memory Clear Test Point TP2

1. Turn OFF the Power Switch.
2. With the circuit across TP1 and 2 closed, turn ON the Power Switch.
3. In approx. 5 sec., open the circuit across TP1 and 2.

NOTE
- *If an erratic operation or display occurs, perform the clearing procedures in the order of PJ2 and TP2.*
- *When memory clear has been performed, make the necessary settings again.*

<List of Data Cleared by Switches and Points>

Clearing Means / Data Cleared	Front Door Open/Close	Trouble Reset Switch (S1)	Initialize Points (PJ2)	Memory Clear Test Point (TP2)
Misfeed display	❍	❍	❍	❍
Malfunction display (excluding Exposure Lamp and fusing malfunctions)	❍	❍	❍	❍
Malfunction display (including Exposure Lamp and fusing malfunctions)	–	❍	❍	❍
Erratic operation/display	–	–	❍	❍
User mode	–	–	–	❍
Service mode	–	–	–	❍
F3/5/8 adjustment values	–	–	–	❍
Adjust mode	–	–	–	❍

❍ : Cleared – : Not cleared

4 USER MODE

- This mode is used to make various settings according to the user's needs.

4-1. Functions Available from the User Mode

No.	Function
*0	Mixed Original Detection
**4	Lightweight Original
*6	Smaller Originals
7	Auto Power OFF Disabling
*9	File Margin
*10	Priority Paper Size/Source
**12	APS/AMS/Manual Priority
13	Optimum Exposure Level
14	Priority Manual Exposure Level
**15	Finishing Mode Priority

No.	Function
*18	Priority Orig. ▶ Copy type
20	Auto clear ON/OFF
21	Energy Saver ON Timing
**23	Auto Clear for Plug-In Counter
**24	Sort/Non-Sort Switching ON/OFF
28	Auto Power OFF Timing
*51	Special Paper Setting (1st Drawer)
*52	Special Paper Setting (2nd Drawer)
*53	Special Paper Setting (3rd Drawer)
*54	Special Paper Setting (4th Drawer)

*For 23 cpm Copier only
**For 18/23 cpm Copier only

4-2. User Mode Setting Procedure

<Setting Procedure>
1. Hold down the Panel Reset key for about 3 seconds to set the copier into the User mode. ("U" appears on the Zoom Ratio Indicator.)
2. From the 10-Keys, enter the number assigned to the desired function. (The number entered appears following the letter "U" on the Zoom Ratio Indicator.)
3. Press the Start key. (Then, the current setting for that particular function appears on the Multi-Copy Display.)
4. Press the Clear key.
5. Make a new setting.
6. Press the Start key to validate the entry of the new setting.

Note
If the setting data entered is outside the specifications, it is not validated and is shown blinking.

<Resetting Procedure>
- Press the Panel Reset key to return to the Basic screen.

[User Mode]

4-3. User Mode Setting Details

<table>
<tr><th>Function No.</th><th>Setting (The default is Highlighted .)</th></tr>
<tr><td>U-0
*For 23 cpm
Copier only</td><td>
<Mixed Original Detection>
Select whether to turn ON the Mixed Original Detection function or not (high-speed processing).
ON: The copier enables its Auto Paper Selection (APS) or Auto Size Selection (AMS) function for all originals loaded in the ADF (i.e., it can make copies from originals of assorted sizes loaded in a set).
OFF: The copier enables its APS/AMS function only for the first original loaded in the ADF.
<table>
<tr><td>Data</td><td>0</td><td>1</td></tr>
<tr><td>Description</td><td>Mixed Original Detection function ON</td><td>Mixed Original Detection function OFF (high-speed processing)</td></tr>
</table>
</td></tr>
<tr><td>U-4
**For 18/23 cpm
Copier only</td><td>
<Lightweight Original>
Select whether to turn ON the Lightweight Original function or not when the ADF is used.
<table>
<tr><td>Data</td><td>0</td><td>1</td></tr>
<tr><td>Description</td><td>Normal
The original is pressed against the Original Width Scale when stopped.</td><td>Lightweight Original
The original is not pressed against the Original Width Scale when stopped.</td></tr>
</table>
</td></tr>
<tr><td>U-6
*For 23 cpm
Copier only</td><td>
<Smaller Originals>
Select whether to enable (“ON”) a copy cycle or not (“OFF”) when it is initiated by pressing the Start key with an original of the smallest detectable size (metric areas: A5 or smaller; inch areas: Letter or smaller) placed on the Original Glass.
<table>
<tr><td>ON</td><td>OFF</td></tr>
<tr><td>The copy cycle is run using the paper loaded in the default paper source.</td><td>A warning message is given and the copier inhibits the start of this copy cycle.</td></tr>
</table>
NOTE
The default setting is OFF for the metric areas and ON for the inch areas.
</td></tr>
</table>

[User Mode]

<table>
<tr><th>Function No.</th><th>Setting (The default is Highlighted .)</th></tr>
<tr><td>U-7</td><td><Auto Power OFF Disabling>
Select whether to enable or disable the setting of “0: Disabled” for “Auto Power OFF Timing” available from the User mode.
<table>
<tr><td>Data</td><td>0</td><td>1</td></tr>
<tr><td>Description</td><td>Disabled</td><td>Enabled</td></tr>
</table></td></tr>
<tr><td>U-9
*For 23 cpm Copier only</td><td><File Margin>
Select the margin making method in the File Margin mode.
<table>
<tr><td>Data</td><td>0</td><td>1</td></tr>
<tr><td>Description</td><td>File Margin mode when the original has a file margin.</td><td>File Margin mode when the original does not have a file margin.</td></tr>
</table></td></tr>
<tr><td>U-10
*For 23 cpm Copier only</td><td><Priority Paper Size/Source>
Select the priority paper size or paper source selected when the copier is set into the AMS or Manual mode.
<table>
<tr><th>Data</th><th>Description</th><th>Data</th><th>Description</th></tr>
<tr><td>0</td><td>A3 (L)</td><td>10</td><td>11” × 17” (L)</td></tr>
<tr><td>1</td><td>B4 (L)</td><td>11</td><td>11” × 14” (L)</td></tr>
<tr><td>2</td><td>A4 (L)</td><td>12</td><td>Legal (L)</td></tr>
<tr><td>3</td><td>B5 (L)</td><td>13</td><td>Letter (L)</td></tr>
<tr><td>4</td><td>A5 (L)</td><td>14</td><td>5-1/2” × 8-1/2” (L)</td></tr>
<tr><td>5</td><td>FLS (L)</td><td>15</td><td>Letter (C)</td></tr>
<tr><td>6</td><td>A4 (C)</td><td>20</td><td>1st Drawer</td></tr>
<tr><td>7</td><td>B5 (C)</td><td>21</td><td>2nd Drawer</td></tr>
<tr><td></td><td></td><td>22</td><td>3rd Drawer</td></tr>
<tr><td></td><td></td><td>23</td><td>4th Drawer</td></tr>
</table>
Default: 15 (inch areas) / 6 (metric areas)
L: lengthwise; C: crosswise

NOTE
If a paper size or source that does not exist is selected, the 1st Drawer (20) is automatically selected.</td></tr>
<tr><td>U-12
**For 18/23 cpm Copier only</td><td><APS/AMS/Manual Priority>
Select the priority copying mode that is automatically selected when the Power Switch is turned ON or Panel Reset key is pressed.
[23 cpm Copier]
<table>
<tr><td>Data</td><td>0</td><td>1</td><td>2</td></tr>
<tr><td>Description</td><td>APS</td><td>AMS</td><td>Manual</td></tr>
</table>
[18 cpm Copier]
<table>
<tr><td>Data</td><td>1</td><td>2</td></tr>
<tr><td>Description</td><td>AMS</td><td>Manual</td></tr>
</table></td></tr>
</table>

[User Mode]

<table>
<tr><th>Function No.</th><th>Setting (The default is Highlighted .)</th></tr>
<tr><td>U-13</td><td>
<Optimum Exposure Level>
Determine the optimum exposure level in the Auto as well as the Manual Exposure mode.
<table>
<tr><th>Data</th><th>Description</th><th>Data</th><th>Description</th></tr>
<tr><td>46</td><td>Low level 4: – 2.0 steps</td><td>50</td><td>Standard ±0 steps</td></tr>
<tr><td>47</td><td>Low level 3: – 1.5 steps</td><td>51</td><td>High level 1: +0.5 steps</td></tr>
<tr><td>48</td><td>Low level 2: – 1.0 steps</td><td>52</td><td>High level 2: +1.0 steps</td></tr>
<tr><td>49</td><td>Low level 1: – 0.5 steps</td><td></td><td></td></tr>
</table>
</td></tr>
<tr><td>U-14</td><td>
<Priority Manual Exposure Level>
Determine the priority exposure level for the Manual Exposure mode. The level determines the priority exposure level selected when the exposure mode is switched from the initial Auto to Manual, and when Manual Exposure is initially selected when power is turned ON.
<table>
<tr><th colspan="2">[Auto ▶ Manual]</th><th colspan="2">[Manual]</th></tr>
<tr><th>Data</th><th>Description</th><th>Data</th><th>Description</th></tr>
<tr><td>0</td><td>Auto ▶ EXP.1</td><td>10</td><td>Manual EXP.1</td></tr>
<tr><td>1</td><td>Auto ▶ EXP.2</td><td>11</td><td>Manual EXP.2</td></tr>
<tr><td>2</td><td>Auto ▶ EXP.3</td><td>12</td><td>Manual EXP.3</td></tr>
<tr><td>3</td><td>Auto ▶ EXP.4</td><td>13</td><td>Manual EXP.4</td></tr>
<tr><td>4</td><td>Auto ▶ EXP.5</td><td>14</td><td>Manual EXP.5</td></tr>
<tr><td>5</td><td>Auto ▶ EXP.6</td><td>15</td><td>Manual EXP.6</td></tr>
<tr><td>6</td><td>Auto ▶ EXP.7</td><td>16</td><td>Manual EXP.7</td></tr>
<tr><td>7</td><td>Auto ▶ EXP.8</td><td>17</td><td>Manual EXP.8</td></tr>
<tr><td>8</td><td>Auto ▶ EXP.9</td><td>18</td><td>Manual EXP.9</td></tr>
</table>
</td></tr>
<tr><td>U-15
**For 18/23 cpm Copier only</td><td>
<Finishing Mode Priority>
Determine the priority finishing mode selected when the copier is equipped with a finishing option.
[23 cpm Copier]
<table>
<tr><td>Data</td><td>0</td><td>1</td><td>2</td><td>3</td></tr>
<tr><td>Description</td><td>Non-Sort</td><td>Sort</td><td>Group</td><td>Sort-and-Staple</td></tr>
</table>
[18 cpm Copier]
<table>
<tr><td>Data</td><td>0</td><td>1</td></tr>
<tr><td>Description</td><td>Non-Sort</td><td>Sort</td></tr>
</table>
</td></tr>
</table>

[User Mode]

<table>
<tr><th>Function No.</th><th>Setting (The default is Highlighted .)</th></tr>
<tr><td>U-18
*For 23 cpm Copier only</td><td>
<Priority Orig. ▶ Copy Type>
Determine the orig. ▶ copy type automatically selected when the Power Switch is turned ON or Panel Reset key is pressed. The setting made in “C-40 (Orig. ▶ Copy Type)” available as one of the Tech. Rep. Choice functions determines the details of orig. ▶ copy type selected by the setting of this function.
[When “0” is set for C-40]
<table>
<tr><th>Data</th><th>Description</th></tr>
<tr><td>0</td><td>1 ➡ 1</td></tr>
<tr><td>1</td><td>1 ➡ 2</td></tr>
<tr><td>2</td><td>2 ➡ 2</td></tr>
<tr><td>3</td><td>1 ➡ 1 2in1</td></tr>
<tr><td>4</td><td>1 ➡ 2 2in1</td></tr>
</table>
[When “1” is set for C-40]
<table>
<tr><th>Data</th><th>Description</th></tr>
<tr><td>0</td><td>1 ➡ 2</td></tr>
<tr><td>1</td><td>1 ➡ 2</td></tr>
<tr><td>2</td><td>2 ➡ 2</td></tr>
<tr><td>3</td><td>1 ➡ 2 2in1</td></tr>
<tr><td>4</td><td>1 ➡ 2 2in1</td></tr>
</table>
NOTE
2in1 = Enabled when an ADF is mounted.
2 = Enabled when a Duplex Unit is mounted.
</td></tr>
<tr><td>U-20</td><td>
<Auto Clear ON/OFF>
Select whether or not to activate the auto clear (panel reset) function after the lapse of a given period of time after a copy cycle has been completed or a key on the control panel has been operated.
<table>
<tr><td>Data</td><td>0</td><td>1</td><td>2</td></tr>
<tr><td>Description</td><td>Disabled</td><td>Enabled: 30 sec.</td><td>Enabled: 1 min.</td></tr>
</table>
</td></tr>
<tr><td>U-21</td><td>
<Energy Saver ON Timing>
Select whether or not to set the copier into the Energy Saver mode after the lapse of a given period of time after a copy cycle has been completed or a key on the control panel has been operated.
<table>
<tr><th>Data</th><th>Description</th><th>Data</th><th>Description</th></tr>
<tr><td>1</td><td>Enabled: 1 min.</td><td>.</td><td>.</td></tr>
<tr><td>2</td><td>Enabled: 2 min.</td><td>.</td><td>.</td></tr>
<tr><td>.</td><td>.</td><td>.</td><td>.</td></tr>
<tr><td>.</td><td>.</td><td>97</td><td>Enabled: 97 min.</td></tr>
<tr><td>.</td><td>.</td><td>98</td><td>Enabled: 98 min.</td></tr>
<tr><td>15</td><td>Enabled: 15 min.</td><td>99</td><td>Enabled: 240 min.</td></tr>
</table>
NOTE
Except for 99, the setting data equals the time in minutes.
</td></tr>
</table>

[User Mode]

<table>
<tr><th>Function No.</th><th>Setting (The default is Highlighted .)</th></tr>
<tr><td>U-23
**For 18/23 cpm Copier only</td><td><Auto Clear for Plug-In Counter>
Select whether to activate the auto clear (panel reset) function when the Plug-In Counter is pulled out.
<table>
<tr><td>Data</td><td>0</td><td>1</td></tr>
<tr><td>Description</td><td>Auto clear is not activated.</td><td>Auto clear is activated.</td></tr>
</table></td></tr>
<tr><td>U-24
**For 18/23 cpm Copier only</td><td><Sort/Non-Sort Switching ON/OFF>
Select whether to enable or disable the function that automatically switches between the Sort and Non-Sort mode depending on the number of originals loaded in the ADF when the copier is equipped with an ADF and finishing option.
<table>
<tr><td>Data</td><td>0</td><td>1</td></tr>
<tr><td>Description</td><td>OFF (disabled)</td><td>ON (enabled)</td></tr>
</table></td></tr>
<tr><td>U-28</td><td><Auto Power OFF Timing>
Select whether or not to enable the auto power OFF function that turns power off automatically after the lapse of a given period of time after a copy cycle has been completed or a key on the control panel has been operated.
<table>
<tr><th>Data</th><th>Description</th><th>Data</th><th>Description</th></tr>
<tr><td>0
1
2
.
.
*30</td><td>Disabled
Enabled: 1 min.
Enabled: 2 min.
.
.
Enabled: 30 min.</td><td>*60
.
.
97
98
99</td><td>Enabled: 60 min.
.
.
Enabled: 97 min.
Enabled: 98 min.
Enabled: 240 min.</td></tr>
</table>
*30: 15/18 cpm Copier 60: 23 cpm Copier

NOTES
1. Except for 0 and 99, the setting data equals the time in minutes.
2. “0” cannot be selected for this function if U-7 (Auto Power OFF Disabling) available as one of the User Mode functions is set to “0.”</td></tr>
<tr><td>U-51 to 54
*For 23 cpm Copier only</td><td><Special Paper Setting>
Designates each drawer of the copier for special paper.
U-51: 1st Drawer
U-52: 2nd Drawer
U-53: 3rd Drawer
U-54: 4th Drawer
<table>
<tr><td>Data</td><td>0</td><td>1</td></tr>
<tr><td>Description</td><td>Plain paper</td><td>Special paper</td></tr>
</table>
NOTE
The APS mode is disabled if “1” is set.</td></tr>
</table>

5 SERVICE MODE

- This mode is used by the Tech. Rep. to set, check, adjust, and/or program various service functions.

5-1. Service Mode Function Tree

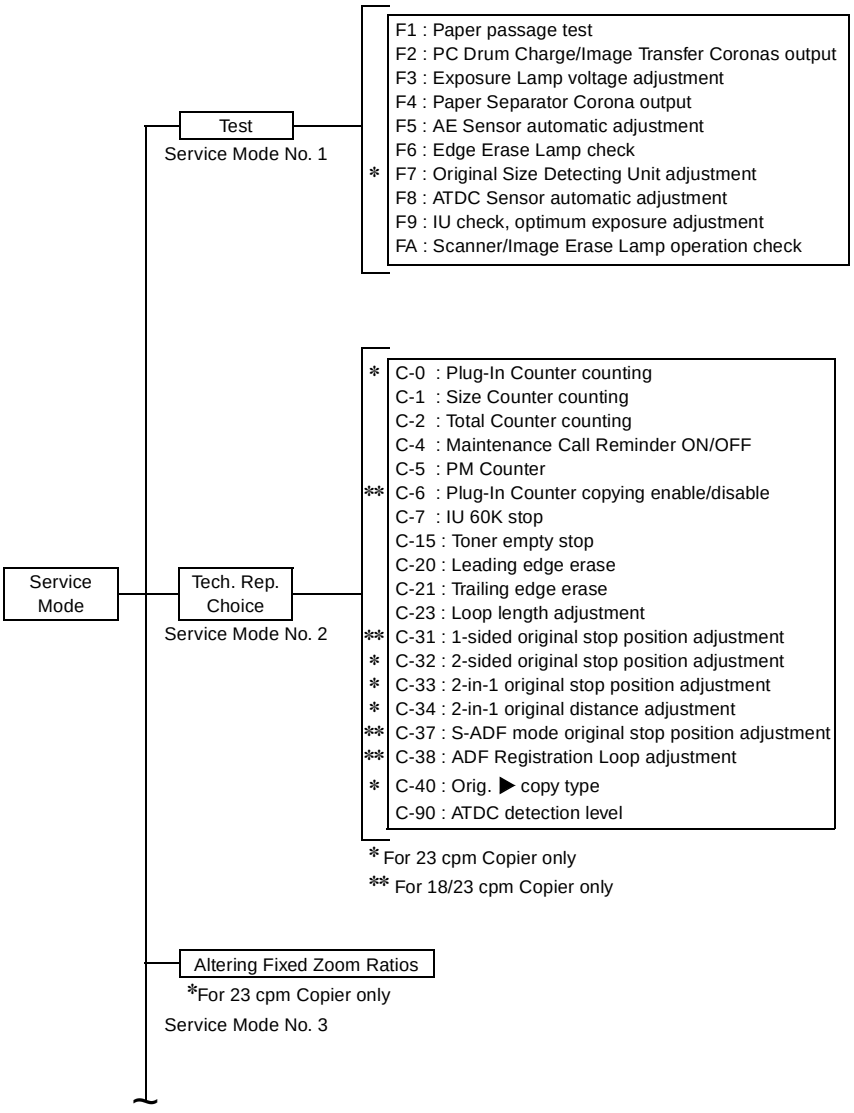

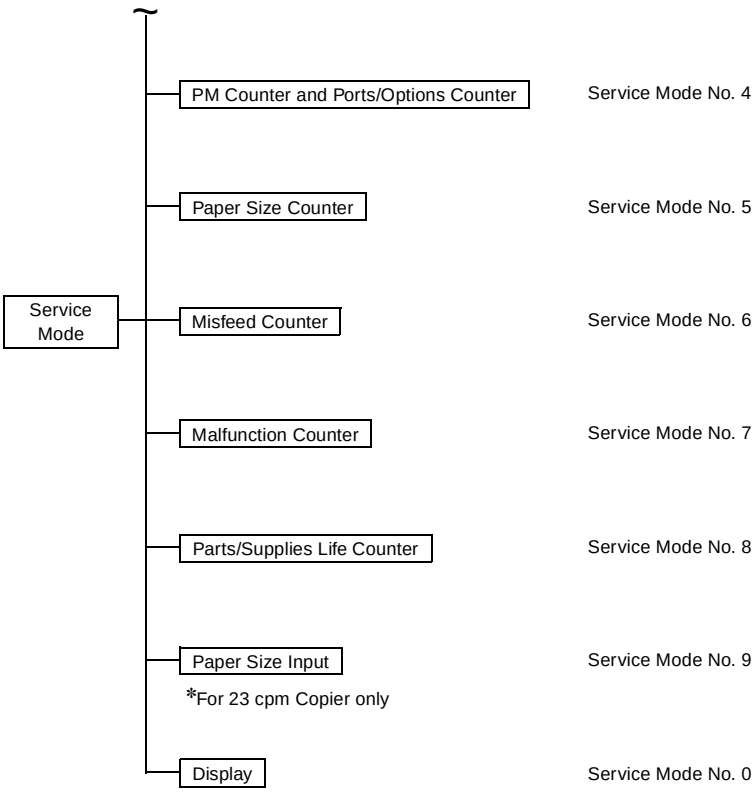

5-2. Entering the Service Mode

<Procedure>

1. Press the Meter Count key. Then, press the following keys in this order.

   Press the Stop key. ➡ Press “0.” ➡ Press “0.” ➡ Press the Stop key. ➡ Press “0.” ➡ Press “1.”

2. From the 10-Keys, press the number corresponding to the service mode no. assigned.
3. Perform the necessary steps for the function selected.

<Leaving the Service Mode>

- Press the Panel Reset key twice to go back to the Basic screen.

5-3. Settings in the Service Mode

(1) Test

- This function allows the Tech. Rep. to perform various functional tests and adjustments.

<Setting Procedure>
1. Enter the number assigned to the desired test from the 10-Keys. (The number appears on the Multi-Copy Display.)
2. Press the Start key to start the test.
3. Press the Stop key to stop the test.

<Test Copy>
- A test copy can be made by entering “F3, F5” of the Test No., holding down the Stop key and pressing the Start key.

<Leaving the Function>
- Press the Panel Reset key twice to go back to the Basic screen.

[Service Mode ▶ Test]

Test No.	Description
F1	<Paper Passage Test> A paper passage test is carried out to check for correct sensor operation without having to wait for the copier to complete warming up. It provides the following two modes: 1. Normal mode (The Zoom Ratio Indicator shows “On.”) 2. Load OFF mode, in which some parts are put in an inactive state (The Zoom Ratio Indicator shows “Off.”) <Procedure> 1. Using the Zoom Up/Down key, select either one of the two modes. 2. Press the Start key. <To quit> • Press the Stop key, or the test stops when paper runs out.
F2	<PC Drum Charge/Image Transfer Coronas Output> Do not use this test as it is only for factory adjustment.
F3	<Exposure Lamp Voltage Adjustment> This test allows the Tech. Rep. to adjust the maximum Exposure Lamp voltage and the optimum exposure setting in the Manual Exposure mode. (It runs for 30 sec.) ***NOTE*** *For details, see DIS/REASSEMBLY, ADJUSTMENT.*
F4	<Paper Separator Corona Output> Do not use this test as it is only for factory adjustment.
F5	<AE Sensor Automatic Adjustment> This test automatically adjusts the AE Sensor. (It runs for 5 sec.) ***NOTE*** *For details, see DIS/REASSEMBLY, ADJUSTMENT.*

[Service Mode ▶ Test]

Test No.	Description
F6	<Image Erase Lamp Check> This test checks whether the Image Erase Lamp turns ON and OFF properly. (It runs for one complete copy cycle.) <Procedure> • Press the Start key after the copier has completed warming up. This causes the lamp to make a checkered pattern.
F7 *For 23 cpm Copier only	<Original Size Detecting Unit Adjustment> This test automatically adjusts the Original Size Detecting Sensors, starting when the Start key is pressed. (It runs for 5 sec.)
F8	<ATDC Sensor Automatic Adjustment> This test automatically adjusts the ATDC Sensor. (It runs for about 5 min.) ***NOTE*** *For details, see DIS/REASSEMBLY, ADJUSTMENT.*
F9	<IU Check, Optimum Exposure Adjustment> Do not use this test as it is only for factory adjustment.
FA	<Scanner/Image Erase Lamp Operation Check> Do not use this test as it is only for factory adjustment.

– Components Energized in the Tests –

Component \ Test Operation	F1	F2	F3	F4	F5	F6	F7	F8	F9	FA
Main Drive Motor	❍	❍	❍	❍	❍	❍	–	❍	❍	–
PC Drum Drive Motor	❍	❍	❍	❍	❍	❍	–	❍	❍	–
Fan Motors	❍	❍	❍	❍	❍	❍	–	❍	❍	–
Toner Replenishing Motor	–	–	–	–	–	–	–	❍	–	–
HV (PC Drum Charge, Image Transfer, grid)	*	❍	–	–	–	❍	–	❍	❍	–
Bias (Developing, Separator, seal)	*	–	❍	❍	❍	❍	–	❍	❍	–
Scanner	❍	–	*	–	*	❍	–	–	❍	❍
Paper Take-Up Roll	❍	–	–	–	–	❍	–	–	–	–
Paper Transport Rollers	❍	–	–	–	–	❍	–	–	–	–
Synchronizing Rollers	❍	–	–	–	–	❍	–	–	–	–
Exposure Lamp	*	–	❍	–	❍	❍	–	–	❍	–
Main Erase Lamp	❍	❍	❍	❍	❍	❍	–	❍	❍	–
Image Erase Lamp	*	–	❍	❍	❍	*	–	❍	–	❍
PC Drum Paper Separator Fingers	❍	–	–	–	–	❍	–	–	–	–
Misfeed detection	❍	–	–	–	–	❍	–	–	–	–
Malfunction detection	❍	❍	❍	❍	❍	❍	❍	❍	❍	❍

❍ : Energized – : Remain deenergized

*F1 : Deenergized in the load OFF mode.

*F3/5 : The Scanner stops at the TRON position.

*F6 : Turned ON and OFF alternately to make a checkered pattern.

(2) Tech. Rep. Choice

- This function allows the Tech. Rep. to make various settings and adjustments.

<Setting Procedure>

1. Press “2” from the 10-Keys. (The Zoom Ratio Indicator shows “C.”)
2. Press the number assigned to the desired Tech. Rep. Choice. (The Zoom Ratio Indicator shows “C” plus the number of the chosen function.)
3. Press the Start key. (The Multi-Copy Display shows the current setting for the chosen function.)
4. Clear the current setting using the Clear key and enter the new setting from the 10-Key Pad.
5. Press the Start key to validate the new setting.

NOTE
If the setting is illegal, it is not validated and is shown blinking.

<Test Copy>

- A test copy can be made by entering “C” of the Tech. Rep. Choice No., holding down the Stop key and pressing the Start key.

<Leaving the Function>

- Press the Panel Reset key twice to go back to the Basic screen.

[Service Mode ▶ Tech. Rep. Choice]

<table>
<tr><th>Choice No.</th><th>Setting (The default is Highlighted .)</th></tr>
<tr><td>C-0
*For 23 cpm Copier only</td><td><Plug-In Counter Counting>
Select the condition by which the Plug-In Counter count is increased.
<table>
<tr><td>Data</td><td>0</td><td>1</td></tr>
<tr><td>Description</td><td>Counts the number of sheets of paper fed out.</td><td>Counts the number of copy processes carried out.</td></tr>
</table>
NOTE
See the Count-up Table for details.</td></tr>
<tr><td>C-1</td><td><Size Counter Counting>
Select the size of the paper to be counted by the Size Counter.
<table>
<tr><td>Data</td><td>0</td><td>1</td><td>2</td><td>3</td></tr>
<tr><td>Description (Metric areas)</td><td>No count</td><td>A3</td><td>A3/B4</td><td>A3/B4/FLS</td></tr>
<tr><td>Description (Inch areas)</td><td>No count</td><td>11” × 17”</td><td>11” × 17”, 8-1/2” × 14”</td><td>11” × 17”, 8-1/2” × 14”, 11” × 14”</td></tr>
</table>
NOTE
See the Count-up Table for details.</td></tr>
</table>

[Service Mode ▶ Tech. Rep. Choice]

<table>
<tr><th>Choice No.</th><th>Setting (The default is Highlighted .)</th></tr>
<tr><td>C-2</td><td>
<Total Counter Counting>
Select the conditions (paper size and 2-sided copying) by which the Total Counter count is increased.
<table>
<tr><td>Data</td><td>0</td><td>1</td><td>2</td></tr>
<tr><td>Description</td><td>1 count per 1 copy cycle</td><td>Multiple count-up</td><td>Multiple count-up</td></tr>
</table>
NOTE
See the Count-up Table for details.
</td></tr>
<tr><td></td><td>
<Count-up Table>
<table>
<tr><td colspan="2" rowspan="3">Copying</td><td colspan="4">1-Sided</td><td colspan="4">2-Sided</td><td rowspan="3">Manual Bypass</td></tr>
<tr><td colspan="2" rowspan="2">Size</td><td colspan="2">Sizes other than those set</td><td colspan="2">Set sizes</td><td colspan="2">Sizes other than those set</td><td colspan="2">Set sizes</td></tr>
<tr><td colspan="2" rowspan="2">Total</td><td colspan="2">Mode</td><td colspan="2">Mode</td><td colspan="2">Mode</td><td colspan="2">Mode</td></tr>
<tr><td>0</td><td>1</td><td>2</td><td>0</td><td>1</td><td>2</td><td>0</td><td>1</td><td>2</td><td>0</td><td>1</td><td>2</td></tr>
<tr><td colspan="2">Total (mechanical, electronic)</td><td colspan="2">1</td><td>1</td><td>2</td><td>2</td><td colspan="2">2</td><td>2</td><td>4</td><td>4</td><td>1</td></tr>
<tr><td colspan="2">Size (electronic)</td><td colspan="2">0</td><td>1</td><td>1</td><td>2</td><td colspan="2">0</td><td>2</td><td>2</td><td>0</td><td>0</td></tr>
<tr><td colspan="2">2-Sided Total (electronic)</td><td colspan="2">0</td><td colspan="2">0</td><td>1</td><td>1</td><td>2</td><td>1</td><td>1</td><td>4</td><td>0</td></tr>
<tr><td colspan="2">2-Sided Size (electronic)</td><td colspan="2">0</td><td colspan="2">0</td><td colspan="2">0</td><td>1</td><td>1</td><td>4</td><td>0</td></tr>
<tr><td rowspan="2">Plug-In (mechanical)</td><td>Counting copies</td><td colspan="2">1</td><td>1</td><td>2</td><td>2</td><td>1</td><td>2</td><td>2</td><td>1</td><td>4</td><td>4</td><td>1</td></tr>
<tr><td>Counting copy cycles</td><td colspan="2">1</td><td>1</td><td>2</td><td>2</td><td colspan="2">2</td><td>2</td><td>4</td><td>4</td><td>1</td></tr>
</table>
0: No count 1: 1 count 2: 2 counts 4: 4 counts
</td></tr>
<tr><td>C-4</td><td>
<Maintenance Call Reminder ON/OFF>
Select whether to enable or disable the maintenance call reminder.
<table>
<tr><td>Data</td><td>0</td><td>1</td></tr>
<tr><td>Description</td><td>The maintenance call reminder is not given.</td><td>The maintenance call reminder is given.</td></tr>
</table>
</td></tr>
</table>

[Service Mode ▶ Tech. Rep. Choice]

<table>
<tr><th>Choice No.</th><th>Setting (The default is Highlighted .)</th></tr>
<tr><td>C-5</td><td><PM Counter>
Select either PM Counter or Copy Kit Counter.
<table>
<tr><th>Data</th><th>Description</th></tr>
<tr><td>0</td><td>PM Counter</td></tr>
<tr><td>1</td><td>Copy Kit Counter: Copying not inhibited after the counter has counted down to zero.</td></tr>
<tr><td>2</td><td>Copy Kit Counter: Copying inhibited after the counter has counted down to zero.</td></tr>
</table>
NOTE
If this function is set to “2,” the copier gives an indication to replace the IU and inhibits the initiation of a new copy cycle even if C-4 is set to “0.”</td></tr>
<tr><td>C-6
**For 18/23 cpm Copier only</td><td><Plug-In Counter Copying Enable/Disable>
Select whether to enable or disable copying according to whether the Plug-In Counter is plugged in or not.
<table>
<tr><th>Data</th><th>0</th><th>1</th></tr>
<tr><td>Description</td><td>Permits copying even when the Plug-In Counter is not plugged in.</td><td>Inhibits copying when the Plug-In Counter is not plugged in.</td></tr>
</table>
NOTE
Be sure to set this function to “1” when the Plug-In Counter is installed.</td></tr>
<tr><td>C-7</td><td><IU 60K Stop>
Select whether or not to inhibit copying when IU Counter has counted 60K.
<table>
<tr><th>Data</th><th>0</th><th>1</th></tr>
<tr><td>Description</td><td>Permits copying.</td><td>Inhibits copying.</td></tr>
</table>
Default: 0 (inch areas) / 1 (metric areas)</td></tr>
<tr><td>C-15</td><td><Toner Empty Stop>
Select whether or not to inhibit copying when a toner-empty condition is detected.
<table>
<tr><th>Data</th><th>0</th><th>1</th></tr>
<tr><td>Description</td><td>Permits copying.</td><td>Inhibits copying.</td></tr>
</table>
NOTE
If “1” is set, the copier inhibits copying when it detects a T/C of 3.5% or lower.</td></tr>
</table>

[Service Mode ▶ Tech. Rep. Choice]

<table>
<tr><th>Choice No.</th><th>Setting (The default is Highlighted .)</th></tr>
<tr><td>C-20</td><td><Leading Edge Erase>
Varies the width of erase on the leading edge.
<table>
<tr><td>Data</td><td>0</td><td>1</td></tr>
<tr><td>Description</td><td>Smaller width</td><td>Greater width</td></tr>
</table>
NOTE
When the setting is changed, it results in the erase width being changed by about 3 mm.</td></tr>
<tr><td>C-21</td><td><Trailing Edge Erase>
Varies the width of erase on the trailing edge.
<table>
<tr><td>Data</td><td>0</td><td>1</td></tr>
<tr><td>Description</td><td>Smaller width</td><td>Greater width</td></tr>
</table>
NOTE
When the setting is changed, it results in the erase width being changed by about 3 mm.</td></tr>
<tr><td>C-23</td><td><Loop Length Adjustment>
Adjust the length of the loop to be formed in paper before the Synchronizing Rollers.
<table>
<tr><th>Data</th><th>Description</th><th>Data</th><th>Description</th></tr>
<tr><td>47</td><td>Loop length about 4.9 mm</td><td>51</td><td>Loop length about 7.7 mm</td></tr>
<tr><td>48</td><td>Loop length about 5.6 mm</td><td>52</td><td>Loop length about 8.4 mm</td></tr>
<tr><td>49</td><td>Loop length about 6.3 mm</td><td>53</td><td>Loop length about 9.1 mm</td></tr>
<tr><td>50</td><td>Loop length about 7.0 mm</td><td></td><td></td></tr>
</table></td></tr>
<tr><td>C-31 to 34
*For 23 cpm Copier only
**For 18/23 cpm Copier only</td><td><Original Stop Position Adjustment>
Adjust the position at which to stop the original in each of the following ADF modes.
**C-31: 1-sided original stop position adjustment
*C-32: 2-sided original stop position adjustment
*C-33: 2-in-1 original stop position adjustment
*C-34: 2-in-1 original distance adjustment
**C-37: S-ADF mode original stop position adjustment
**C-38: ADF Registration Loop adjustment
<table>
<tr><td>Data</td><td>43.....50.....58</td></tr>
<tr><td>Adjustment Value</td><td>–7 mm.....±0 mm.....+8 mm</td></tr>
</table>
NOTE
The stop position is farther away from the Original Width Scale (or a greater distance between 2-in-1 originals) in the + direction.</td></tr>
</table>

[Service Mode ▶ Tech. Rep. Choice]

<table>
<tr><th>Choice No.</th><th>Setting (The default is Highlighted .)</th></tr>
<tr><td>C-40
*For 23 cpm Copier only</td><td><Orig. ▶ Copy Type>
Determine the orig. ▶ copy types that can be selected in the “Priority Orig. ▶ Copy Type” available from the User mode.
<table>
<tr><td>Data</td><td>0</td><td>1</td></tr>
<tr><td>Description</td><td>All orig. ▶ copy types can be selected.</td><td>Only the types involving 2-sided copy can be selected.</td></tr>
</table></td></tr>
<tr><td>C-90</td><td><ATDC Detection Level>
Select the ATDC control level (T/C ratio).
<table>
<tr><th>Data</th><th>Description</th><th>Data</th><th>Description</th></tr>
<tr><td>48</td><td>T/C ratio 5.0 %</td><td>51</td><td>T/C ratio 6.5 %</td></tr>
<tr><td>49</td><td>T/C ratio 5.5 %</td><td>52</td><td>T/C ratio 7.0 %</td></tr>
<tr><td>50</td><td>T/C ratio 6.0 %</td><td>53</td><td>T/C ratio 7.5 %</td></tr>
</table></td></tr>
</table>

(3) Altering Fixed Zoom Ratios (For 23 cpm Copier Only)

- This function allows the Tech. Rep. to change the fixed zoom ratios over the range between ×0.500 and ×2.000 according to the needs of the user.

<Setting Procedure>

1. Select the Altering Fixed Zoom Ratios function.
2. Select the particular fixed zoom ratio to be changed and press the Clear key to clear it.

NOTE

If the zoom ratio is cleared mistakenly, press the Panel Reset key to undo the clearing operation.

3. Enter the desired zoom ratio from the 10-Keys.
4. Press the Start key to validate the new zoom ratio.

(4) PM Counter and Ports/Options Counter

- This function shows the counts of the PM Counter (IU) and Ports/Options Counter. The particular port or option is indicated by the corresponding LED of the Misfeed Monitor. The count is shown across the “Zoom Ratio Indicator” and “Multi-Copy Display.”

NOTE

The PM Counter is indicated by the IU Service Life Indicator LED.

Example) Count: 12345

Multi-Copy Display	Zoom Ratio Indicator
123	45

Counting System

- PM Counter: Count-down type (When the counter has counted down to zero, a – (minus) sign appears in the Zoom Ratio Indicator and the count is thereafter incremented.
- Ports/Options Counter: Count-up type

<Setting Procedure>

1. Select the PM Counter and Ports/Options Counter function.
2. Each press of the Paper Select key lights up a new LED representing the new counter in the following order.

[23 cpm Copier]

Order	Description	Order	Description
1	PM Counter	6	Manual bypass
2	1st Drawer	7	Duplex take-up
3	2nd Drawer	8	Sorter
4	3rd Drawer (Paper Feed Cabinet)	9	Stapling
5	4th Drawer (Paper Feed Cabinet)	10	ADF

NOTE

PF-112, if the copier is so equipped, is indicated by the 3rd Drawer LED only.

[18 cpm Copier]

Order	Description
1	PM Counter
2	Copier paper source
3	Manual bypass
4	Sorter
5	ADF

[15 cpm Copier]

Order	Description
1	PM Counter
2	Copier paper source
3	Manual bypass

<Setting a PM Counter Count>
1. Show the count of the PM Counter (IU Service Life Indicator) and clear it.
2. Enter the desired count from the 10-Keys.

NOTE
Press the Stop key to undo the clearing command.

3. Press the Start key to validate the new count setting.

<Clearing a Count>
- Show the count of the counter to be cleared and press the Clear key. If a count is mistakenly cleared, press the Stop key to undo the clearing command.

(5) Paper Size Counter

- This function shows the counts of different sizes of paper.
  The paper size is indicated by the Paper Select LED. The count is shown across the "Zoom Ratio Indicator" and "Multi-Copy Display."

Example
Count: 12345

Multi-Copy Display	Zoom Ratio Indicator
123	45

<Setting Procedure>
1. Select the Paper Size Counter function.
2. Each press of the Paper Select key lights up a new LED representing the new counter in the following order.

[23 cpm Copier: Metric areas]

Order	Description
1	A3
2	A4
3	A5
4	B4
5	FLS
6	Inch

[23 cpm Copier: Inch areas]

Order	Description
1	Legal
2	Letter
3	11" × 17"
4	11" × 14"
5	Invoice
6	Metric

[15/18 cpm Copier: Metric areas]

Order	Description
1	A3
2	A4
3	A5
4	B4
5	FLS
6	Inch

[15/18 cpm Copier: Inch areas]

Order	Description
1	Legal
2	Letter
3	11" × 17"
4	11" × 14"
5	Invoice
6	Metric

<Clearing a Count>
- Show the count of the counter to be cleared and press the Clear key. If a count is mistakenly cleared, press the Stop key to undo the clearing command.

(6) Misfeed Counter

- This function shows the number of misfeeds that have occurred at different locations in the copier (count-up type counter). The Monitor Display tells the location of the misfeed by a lit LED. The count is shown on the Zoom Ratio Indicator and the misfeed code is given on the Multi-Copy Display.

Example
Misfeed location: Manual bypass
Count: 123

Zoom Ratio Indicator
123

Multi-Copy Display
J

<Setting Procedure>
1. Select the Misfeed Counter function.
2. Each press of the Paper Select key lights up a new LED representing the new counter in the following order.

[23 cpm Copier]

Order	Description		Order	Description	
1	Manual bypass	J	10	Storage/transport	J
2	1st Drawer	J	11	Storage	J
3	2nd Drawer	J	12	Sorter	J
4	3rd Drawer (Paper Feed Cabinet)	J	13	ADF (take-up)	JA
5	4th Drawer (Paper Feed Cabinet)	J	14	ADF (transport)	Jb
6	Duplex take-up/transport	J	15	ADF (exit)	Jc
7	Paper take-up/transport	J	16	ADF (turnover)	Jd
8	Separator	J	17	ADF (single feed)	JE
9	Exit	J			

NOTE
PF-112, if the copier is so equipped, is indicated by the 3rd Drawer LED.

[15 cpm Copier]

Order	Description	
1	Manual bypass	J0
2	Copier paper take-up/ transport	J0
3	Take-up/transport	J1
4	Separator	J2
5	Exit	J3
6	Sorter	J
7	ADF	JA~JE

[18 cpm Copier]

Order	Description	
1	Manual bypass	J0
2	Copier paper take-up/ transport	J0
3	Take-up/transport	J1
4	Separator	J2
5	Exit	J3

<Clearing a Count>
- Show the count of the counter to be cleared and press the Clear key. If a count is mistakenly cleared, press the Stop key to undo the clearing command.

(7) Malfunction Counter

- This function shows the number of malfunctions that have occurred at different locations in the copier (count-up type counter). The Zoom Ratio Indicator shows the malfunction code, while the Multi-Copy Display shows the count.

Example
ATDC Sensor malfunction (F30)
Count: 12

Zoom Ratio Indicator	Multi-Copy Display
F30	12

<Setting Procedure>

1. Select the Malfunction Counter function.
2. Each press of the Paper Select key shows the count of a new counter in the following order.

NOTE
The count is given only if it is not "0." If all counts are "0," the message "All 0" is shown.

Order	Malfunction Code	Description
1	000	A Main Drive Motor malfunction
2	010	A PC Drive Moter malfunction
3	04C	A Cooling Fan Motor malfunction
4	070	A Toner Replenishing Motor malfunction
5	400	An Exposure Lamp malfunction
6	500	An abnormally low fusing temperature during warm-up
7	510	An abnormally low fusing temperature after completion of warm-up
8	520	An abnormally high fusing temperature
9	600	A Scanner drive system malfunction
10	610	A Lens drive system malfunction
11	620	A Mirror drive system malfunction
12	900	A 1st Drawer malfunction
13	950	A 2nd Drawer malfunction
14	990	A Paper Feed Cabinet Main Tray malfunction
15	998	A Paper Feed Cabinet Shift Tray malfunction
16	99E	A Paper Feed Cabinet
17	F02	An Original Size Detecting Unit malfunction
18	F10	An AE Sensor malfunction
19	F30	An ATDC Sensor malfunction
20	F79	A Paper Empty Sensor malfunction
21	FE1	An Original Size Detecting Sensor malfunction
22	b10	A Sorter Paper Clamp Unit moving malfunction
23	b30	A Sorter Paper Aligning Motor malfunction
24	b50	A Sorter Staple Unit malfunction
25	b60	A Sorter Bin moving mechanism malfunction
26	d00	A Duplex Unit Guide Plates malfunction
27	d20	A Duplex Unit entrance port switching failure
28	d50	A Duplex Drive Motor malfunction
29	E1	A starter charging failure
30	E2	An ATDC automatic adjustment/IU fuse blowing failure
31	Ar1	Copier watchdog
32	Ar2	ADF watchdog
33	Ar3	Sorter watchdog

✻ For 18 cpm Copier, the counter counts are shown in the order of 1 to 11, 18, 19, 25 and 29 to 33.
15 cpm Copier, the counter counts are shown in the order of 1 to 11, 18, 19 and 29 to 31.

<Clearing a Count>

- Show the count of the counter to be cleared and press the Clear key. If a count is mistakenly cleared, press the Stop key to undo the clearing command.

(8) Parts/Supplies Life Counter

- This function shows the number of copy processes to which different parts or supplies have been subjected (count-up type). Each count is given as shown below.

Example
IU Counter
Count: 1234567

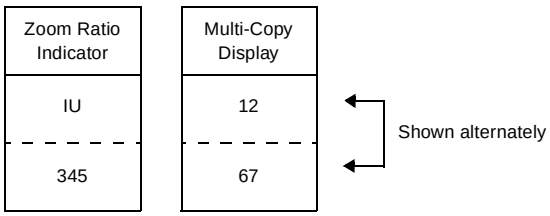

<Setting Procedure>
1. Select the Parts/Supplies Life Counter function.
2. Each press of the Paper Select key shows the count of a new counter in the following order.

Order	Zoom Ratio Indicator	Description
1	IU	IU Counter
2	Pc	PC Drum Counter
3	St	Developer Counter
4	Cb	Cleaning Blade Counter
5	Fu	Fusing Unit Counter

<Clearing a Count>
- Show the count of the counter to be cleared and press the Clear key. If a count is mistakenly cleared, press the Stop key to undo the clearing command.

NOTE
The IU Counter cannot be cleared under this function. However, the counts of all counters except the Fusing Unit Counter under this counter function are cleared when the starter charging sequence is completed.

(9) Paper Size Input (For 23 cpm Copier Only)

- This function allows the Tech. Rep. to enter the size of the paper loaded in each drawer (except the 1st Drawer which is a Universal Tray).

<Setting Procedure>

1. Select the Paper Size Input function.
2. Each press of the Paper Select key shows a new paper size in the following order.

Order	Zoom Ratio Indicator	Multi-Copy Display	Description
1	Current paper size	2F	2nd Drawer length
2		2C	2nd Drawer width
3		3F	3rd Drawer (Paper Feed Cabinet) length
4		3C	3rd Drawer (Paper Feed Cabinet) width
5		4F	4th Drawer (Paper Feed Cabinet) length
6		4C	4th Drawer (Paper Feed Cabinet) width
7		5F	(Japan Only)
8		5C	(Japan Only)

NOTE
For PF-112, use 3F and 3C for the size input.

3. Show the paper size to be set and press the Clear key to clear the current size.
4. From the 10-Keys, enter the new paper size.

(10) Display

- This function is used to check the time it takes the copier to complete different functions and to make a control panel display test and sensor check.

<Setting Procedure>

1. Select the Display function.
2. From the 10-Keys, enter the number (0, 1, 2, 6, or 7) corresponding to the item to be checked/set.

[Service Mode ▶ Display]

Display Function	Setting
d0	<Warm-up time> The warm-up time is shown on the Zoom Ratio Indicator
d1	<First copy time> The first copy time is shown on the Zoom Ratio Indicator
d2	<Multiple copy time> The multiple copy time is shown on the Zoom Ratio Indicator
d6	<Display test> All LEDs on the control panel are turned ON and OFF (blinking) for checking operations.
d7	<Sensor check> When a misfeed or malfunction occurs, this function is used to make a sensor check to isolate the possible faulty spot.) ***NOTE*** *For details, see TROUBLESHOOTING.*

6 ADJUST MODE

- The Adjust mode is used to adjust the optical system at the factory. Use this mode only when the RAM Board (PWB-Y) has been replaced and memory clear performed. Whenever PWB-Y has been replaced or memory clear performed, be sure to input the values indicated on the Adjust Mode Label on the inside of the Front Door.

6-1. Functions Available in the Adjust Mode

Function Code	Name
A0	Lens focal length correction
A1	Lens full size position correction
A2	Mirror full size position correction
A3	Feeding-direction zoom ratio correction
A4	Full size registration adjustment

Function Code	Name
A5	Reduction registration adjustment
A6	Book-B scan registration adjustment
A11	Enlargement registration adjustment
A12	Leading edge erase width adjustment
A13	Trailing edge erase width adjustment

6-2. Entering the Adjust Mode

<Procedure>

1. Show the Service Mode Menu on the Touch Panel and then press the following keys in this order.

   Press the Stop key. ➡ Press the Start key.

2. From the 10-Keys, press the number corresponding to the adjust mode function to be used.
   (The function code appears on the zoom ratio indicator.)
3. Press the Start key. Then, the adjustment data appears on the Multi-Copy Display.
4. Using the Clear key, clear the current adjustment data setting and enter the desired data from the 10-Keys.
5. Press the Start key to validate the new data.

NOTE
If the setting is illegal, it is not validated and is shown blinking.

<Test Copy>

- A test copy can be made by entering “A” of the Adjust Mode No., holding down the Stop key and pressing the Start key.

<Leaving the Adjust Mode>

- Press the Panel Reset key twice to go back to the Basic screen.

6-3. Settings in the Adjust Mode

[Service Mode ▶ Adjust Mode]

<table>
<tr><th colspan="2">Adjust Mode</th><th>Setting</th></tr>
<tr><td>A0</td><td>Lens focal length correction</td><td>Corrects variations in the Lens focal length (according to the grouping of the Lenses).
<table>
<tr><td>Data</td><td>49</td><td>50</td><td>51</td></tr>
<tr><td>Description</td><td>Short focal length (–)</td><td>Standard (0)</td><td>Long focal length (+)</td></tr>
</table></td></tr>
<tr><td>A1</td><td>Lens full size position correction</td><td>Corrects the zoom ratio in the crosswise direction by varying the Lens full size position.
<table>
<tr><td>Data</td><td>42</td><td>....</td><td>50</td><td>....</td><td>57</td></tr>
<tr><td>Description</td><td>+26 steps (Reduction direction)</td><td>....</td><td>+58 steps</td><td>....</td><td>+86 steps (Enlargement direction)</td></tr>
</table></td></tr>
<tr><td>A2</td><td>Mirror full size position correction</td><td>Corrects the optical path length of the Mirror for the Lens focal length.
<table>
<tr><td>Data</td><td>42</td><td>....</td><td>50</td><td>....</td><td>57</td></tr>
<tr><td>Description</td><td>+46 steps (Reduction direction)</td><td>....</td><td>+110 steps</td><td>....</td><td>+166 steps (Enlargement direction)</td></tr>
</table></td></tr>
<tr><td>A3</td><td>Feeding-direction zoom ratio correction</td><td>Correct the zoom ratio in the feeding direction by varying the scan speed.
<table>
<tr><td>Data</td><td>42</td><td>....</td><td>50</td><td>....</td><td>58</td></tr>
<tr><td>Description</td><td>–3.2% (Reduction direction)</td><td>....</td><td>±0%</td><td>....</td><td>+3.2% (Enlargement direction)</td></tr>
</table></td></tr>
<tr><td>A4</td><td>Full size registration adjustment</td><td>Corrects registration between the leading edge of the original and that of the image in the full size mode by varying the Synchronizing Roller start timing.
<table>
<tr><td>Data</td><td>30</td><td>....</td><td>50</td><td>....</td><td>70</td></tr>
<tr><td>Description</td><td>–5.6 mm (Smaller deviation)</td><td>....</td><td>±0 mm</td><td>....</td><td>+5.6 mm (Greater deviation)</td></tr>
</table></td></tr>
</table>

[Service Mode ▶ Adjust Mode]

<table>
<tr><th>Adjust Mode</th><th>Setting</th></tr>
<tr><td>A5 Reduction registration adjustment</td><td>Corrects registration between the leading edge of the original and that of the image in a reduction mode by varying the Synchronizing Roller start timing.
<table>
<tr><td>Data</td><td>30</td><td>....</td><td>50</td><td>....</td><td>70</td></tr>
<tr><td>Description</td><td>–5.6 mm (Smaller deviation)</td><td>....</td><td>±0 mm</td><td>....</td><td>+5.6 mm (Greater deviation)</td></tr>
</table></td></tr>
<tr><td>A6 Book-B scan registration adjustment</td><td>Corrects the registration between the leading edge of the original and that of the image in Book-B scan by varying the Synchronizing Roller start timing.
<table>
<tr><td>Data</td><td>30</td><td>....</td><td>50</td><td>....</td><td>70</td></tr>
<tr><td>Description</td><td>–5.6 mm (Smaller deviation)</td><td>....</td><td>±0 mm</td><td>....</td><td>+5.6 mm (Greater deviation)</td></tr>
</table></td></tr>
<tr><td>A11 Enlargement registration adjustment</td><td>Corrects registration between the leading edge of the original and that of the image in an enlargement mode by varying the Synchronizing Roller start timing.
<table>
<tr><td>Data</td><td>30</td><td>....</td><td>50</td><td>....</td><td>70</td></tr>
<tr><td>Description</td><td>–5.6 mm (Smaller deviation)</td><td>....</td><td>±0 mm</td><td>....</td><td>+5.6 mm (Greater deviation)</td></tr>
</table></td></tr>
<tr><td>A12 Leading edge erase width adjustment</td><td>Corrects the leading edge erase width by varying the Image Erase Lamp ON timing.
<table>
<tr><td>Data</td><td>42</td><td>....</td><td>50</td><td>....</td><td>58</td></tr>
<tr><td>Description</td><td>–7.5 mm (Smaller width)</td><td>....</td><td>±0 mm</td><td>....</td><td>+7.5 mm (Greater width)</td></tr>
</table></td></tr>
<tr><td>A13 Trailing edge erase width adjustment</td><td>Corrects the trailing edge erase width by varying the Image Erase Lamp ON timing.
<table>
<tr><td>Data</td><td>40</td><td>....</td><td>50</td><td>....</td><td>60</td></tr>
<tr><td>Description</td><td>–7.5 mm (Smaller width)</td><td>....</td><td>±0 mm</td><td>....</td><td>+7.5 mm (Greater width)</td></tr>
</table></td></tr>
</table>

7 FUNCTION SETTING REQUIREMENTS AT REPLACEMENT OF PARTS

- If a part is replaced as part of troubleshooting and other service jobs, some parts require that a Test operation be run and data values reentered and/or cleared.

Function \ Replacement Part		RAM Board	IU	PC Drum	Developer *1	Cleaning Blade	Fusing Rollers	Exposure Lamp *2
Memory clear		❍						
Initialize		❍						
Job program		❍						
User mode		❍						
Service mode	Tech. Rep. Choice	❍						
	Test F3	❍						❍
	Test F5	❍		❍				
	Test F8	❍	❍		❍			
	PM Counter		❍					
	Clearing Parts/ Supplies Life Counter “Pc”			❍				
	Clearing Parts/ Supplies Life Counter “St”							
	Clearing Parts/ Supplies Life Counter “Cb”					❍		
	Clearing Parts/ Supplies Life Counter “Fu”						❍	
Adjust mode		❍						

❍ : Required

*1 : Including the replacement of the ATDC Sensor.

*2 : Including the cleaning of Lamp Regulator and optical system.