EP1054/EP1085/EP2030

TROUBLESHOOTING

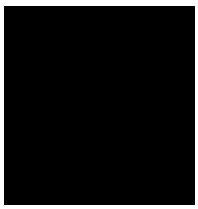

MINOLTA

10794

CONTENTS

*Only when options are used

1. INTRODUCTION ..... T-I
I-I. General Precautions ..... T-I
I-2. How to Use This Book ..... T-I
I-3. Reading the Text ..... T-I
2. I/O PORT CHECK T-2
2-I. Controlled Parts Check Procedure T-2
2-2. Port Check List T-3
3. PAPER TRANSPORT FAILURE ..... T-I 1
3-I. Paper Misfeed T-11
3-2. Misfeed Detected Types and Detection Timings ..... T-I 3
3-3. Misfeed Clearing Procedures T-15
(1) Copier Take-Up Misfeed ..... T-I 5
(2) PF-206 Take-Up Misfeed (23 cpm Copier) T-18
(3) PF-112 Take-Up Misfeed (23 cpm Copier) T-20
(4) Bypass Port Misfeed T-22
(5) Transport/Separator Misfeed T-24
(6) Fusing/Exit Misfeed T-26
(7) Duplex Unit Vertical Transport/Storage Misfeed (23 cpm Copier) ..T-2 8
(8) Duplex Unit Take-Up Misfeed (23 cpm Copier) T-31
4. MALFUNCTIONS T-33
4-I. Self-Diagnostic Function T-33
4-2. Troubleshooting Procedures T-39
(1) COOOO: Main Drive Motor s failure to turn
COO01 : Main Drive Motor turning at abnormal timing T-39
(2) C0010: PC Drive Motor s failure to turn
COO1 1: PC Drive Motor turning at abnormal timing T-40
(3) C004C: Cooling Fan Motor s failure to turn T-41
(4) C0070: Toner Replenishing Motor s failure to turn
CO071: Toner Replenishing Motor turning at abnormal timing T-4 2
(5) C0400: Exposure Lamp s failure to turn ON
CO41 0: Exposure Lamp turning ON at abnormal timing T-43
(6) C0500: Warm-up failure
CO51 0: Abnormally low fusing temperature
C0520: Abnormally high fusing temperature T-45
(7) C0600: Scanner Motor malfunction
CO61 0: Lens Motor malfunction
C0620: Mirror Motor malfunction T-47
(8) C0900: 3rd Drawer Paper Lift-Up Sensor malfunction
C0904: 3rd Drawer Paper Lift-Up Motor malfunction
C0950: 4th Drawer Paper Lift-Up Sensor malfunction
C0954: 4th Drawer Paper Lift-Up Motor malfunction T-49
(9) C0990: Main Tray Upward Motion Failure
C0991: Main Tray Downward Motion Failure
C0992: Main Tray Downward Motion Failure
C0993: Main Tray Upward Motion Failure

C0994: Main Tray Elevator M26's Failure to Turn T-51
(10) C0998: Shifter Transfer Failure
C0999: Shifter Return Failure
C099A: Shifter Return Failure
C099b: Shifter Transfer Failure
C099c: Shifter Motor M27's Failure to Turn T-53
(11) C099E: Shift Gate Position Detecting Failure
C099F: Shift Gate Position Detecting Failure
C0996: 3rd Drawer Lock Release Failure
COF79: Paper Empty Sensor Failure T-55
(12) C0d00: Duplex Unit Front/Rear Edge Guide Plates home position
.....
detection failure
COd20: Duplex Unit Trailing Gate Unit home position detection failure
COd50: Duplex Unit Drive Motor s failure to turn
COd51: Duplex Unit Drive Motor turning at abnormal timing T-57
(13) C0F10: Faulty AE Sensor level
C0F30: ATDC Sensor malfunction T-59
(14) COF02: Original size detection error (Defective CPU)
COFE2 to COFFE: Original Size Detecting Sensor failure T-60
(15) Power is not Turned ON T-61
(16) El, E2 ..... T-63
5. IMAGE FAILURES T-64
5-l. Image Failure Troubleshooting T-64
5-2. Initial Checks T-64
5-3. Troubleshooting Procedures Classified by Image Failures T-65
(1) Blank copy T-66
(2) Black copy T-66
(3) Low Image Density T-67
(4) Foggy background T-68
(5) Black Streaks or Bands T-69
(6) Black Spots T-69
(7) Blank Streaks or Bands T-70
(8) Void Areas T-71
(9) Smear on Back T-7 1

1 INTRODUCTION

1-1. General Precautions

1. When servicing the copier with its covers removed, use utmost care to prevent your hands, clothing, and tools from being caught in revolving parts including the chains and gears.
2. Before attempting to replace parts and unplug connectors, make sure that the power cord of the copier has been unplugged from the wall outlet.
3. Never create a closed circuit across connector pins except those specified in the text and on the printed circuit.
4. When creating a closed circuit and measuring a voltage across connector pins specified in the text, be sure to use the green wire (GND).
5. When the user is using a word processor or personal computer from the wall outlet of the same line, take necessary steps to prevent the circuit breaker from opening due to overloads.
6. Keep all disassembled parts in good order and keep tools under control so that none will be lost or damaged.

1-2. How to Use This Book

1. If a component on a PWB or any other functional unit including a motor is defective, the text only instructs you to replace the whole PWB or functional unit and does not give troubleshooting procedure applicable within the defective unit.
2. All troubleshooting procedures contained herein assume that there are no breaks in the harnesses and cords and all connectors are plugged into the right positions.
3. For the removal procedures of covers and parts, see DIS/REASSEMBLY, ADJUSTMENT.
4. The troubleshooting procedures are given in the order of greater frequency of trouble or order of operation.
5. The procedures preclude possible malfunctions due to noise and other external causes.

1-3. Reading the Text

1. The paper transport failure troubleshooting procedures are given according to the symptom. First identify the location where the paper is present and start the procedure for that particular location. For malfunction troubleshooting, start with step 1 and onward.
2. Make checks in numerical order of steps and, if an item is checked okay, go to the next step.

Pattern 1

Step	Check Item	Result	Action
1	Is ...?	YES	Do this.
2	Go to step 2 if it checks okay.		

Pattern 2

Step	Check Item	Result	Action
1	Is ...?	YES	Do this.
		NO	Check that.
2		Go to step 2 if it checks okay.	

2 I/O PORT CHECK

2-1. Controlled Parts Check Procedure

To allow the Tech. Rep. to easily and safely determine whether a particular controlled part is fully operational, this copier provides the following provision: checking of the data of the I/O port on the board IC with the copier in the standby state (including a misfeed, malfunction, and closure failure condition) allows the Tech. Rep. to determine whether a signal is properly input to, and output from, a controlled part.

<Procedure>
1. When a paper misfeed or malfunction occurs, identify the I/O port of the possibly defective controlled part by reviewing the text or I/O port check list.
2. Select the I/O Check function of the Service mode and show on the Touch Panel the status of the I/O port identified in step 1.
3. Check the input or output port data to determine whether the controlled part is operational and signals are properly input and output.

<Controlled Part Check Procedure by Changing Input Port Data>

Example
When a paper misfeed occurs in the paper take-up section of the copier, 1st Drawer Paper Take-Up Sensor PC55 is considered to be responsible for it.

<Procedure>
1. Remove the sheet of paper misfed.
2. From the I/O port check list, it is found that the H/L input signal to PC55 is supplied from PWB-A (IC4A) APA1.
3. Select the I/O Check function from the Service mode menu and, using the Paper Select key, show the status of PWB-A (IC4A) APA1 on the control panel.
4. Check that the second LED from the right of the Exposure Level Display lights up (sensor being unblocked).

- Zoom Ratio Indicator
- Multi-Copy Display
- Exposure Level Display

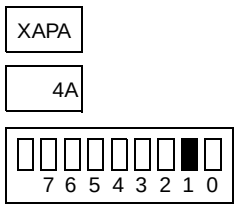

5. Move the PC55 actuator to block the sensor.
6. Check at this time that the LED goes out.
   ON: PC55 is faulty. OFF: PC55 is operational.

2-2. Port Check List

Copier

✻1st Drawer paper take-up LED on the Monitor Display lights up.

Symbol	Name	Port No.	Magnification Ratio Indicator	Multi-Copy Display	Manual Exposure Indicator	Operation Characteristics		CN/PJ No.
						ON	OFF	
M1	PC Drive Motor	P47	P4	1A	□■□□□□□□□□	OFF	ON	PJ11A-12A
M1	PC Drive Motor lock signal	P67	P6	↑	□■□□□□□□□□	When locked	When turned	PJ11A-11A
M2	Main Drive Motor	P43	P4	↑	□□□□□■□□□	OFF	ON	PJ11A-14A
M2	Main Drive Motor lock signal	P66	P6	↑	□□■□□□□□□□	When locked	When turned	PJ11A-13A
M3	Optical Section Cooling Fan Motor	P43	P4	↑	□□□□□■□□□	OFF	ON	PJ22A-2
M3	Optical Section Cooling Fan Motor lock signal	P65	P6	↑	□□□■□□□□□	When locked	When turned	PJ22A-3
M4	Suction Fan Motor	P43	P4	↑	□□□□□■□□□	OFF	ON	PJ5A-9A
M5	Scanner Motor	P61	P6	↑	□□□□□□□■□	OFF	ON	PJ16A-3B
		P62	↑	↑	□□□□□□■□□	ON	OFF	
M6	Lens Motor	P61	↑	↑	□□□□□□□■□	OFF	ON	PJ16A-1B
		P62	↑	↑	□□□□□□■□□	OFF	ON	
M7	Mirror Motor	P61	↑	↑	□□□□□□□■□	ON	OFF	PJ16A-2B
		P62	↑	↑	□□□□□□■□□	OFF	ON	
M8	Toner Replenishing Motor	BPA5	BPA	4A	□□□■□□□□□	OFF	ON	PJ5A-6A
M9	Cooling Fan Motor	OUTO	OUT	5A	□□□□□□□□■	OFF	ON	PJ20A-1
M9	Cooling Fan Motor lock signal	APC2	APC	4A	□□□□□□■□□	When locked	When turned	PJ20A-3
SL2	1st Drawer Paper Take-Up Solenoid	BPA4	BPA	4A	□□□□■□□□□	OFF	ON	PJ4A-9
SL3	2nd Drawer Paper Take-Up Solenoid	BPA3	↑	↑	□□□□□■□□□	OFF	ON	PJ3A-2

Symbol	Name	Port No.	Magnification Ratio Indicator	Multi-Copy Display	Manual Exposure Indicator	Operation Characteristics		CN/PJ No.
						ON	OFF	
SL51	Manual Feed Paper Take-Up Solenoid (down)	PB0	PB	5A	□□□□□□□□□■	OFF	ON	PJ5A-2B
SL51	Manual Feed Paper Take-Up Solenoid (up)	PB1	↑	↑	□□□□□□□□■□	OFF	ON	PJ5A-3B
SL61	Turnover/Exit Switching Solenoid	PB3	↑	↑	□□□□□■□□□	OFF	ON	PJ12A-5
CL1	Synchronizing Roller Clutch	BPA0	BPA	4A	□□□□□□□□■	OFF	ON	PJ5A-4A
CL2	Paper Transport Clutch	BPA1	↑	↑	□□□□□□□■□	OFF	ON	PJ5A-2A
CL51	Manual Feed Paper Take-Up Clutch	PB2	PB	5A	□□□□□□■□□	OFF	OFF	PJ5A-4B
PC10	Left Door Detecting Sensor	PA3	PA1	↑	□□□□□■□□□	When unblocked	When blocked	PJ12A-4
PC12	Duplex Vertical Transport Sensor	PA2	↑	↑	□□□□□□■□□	When unblocked	When blocked	PJ19A-2
PC30	2nd Paper Exit Sensor	APB7	APB	4A	□■□□□□□□□	When unblocked	When blocked	PJ12A-3
PC31	Manual Feed Paper Empty Sensor	APC3	APC	↑	□□□□□■□□□	When unblocked	When blocked	PJ5A-6B
PC51	Transport Roller Sensor	APC7	↑	↑	□■□□□□□□□	When unblocked	When blocked	PJ17A-5A
PC53	1st Paper Exit Sensor	APC5	↑	↑	□□□■□□□□□	When unblocked	When blocked	PJ17A-8A

Symbol	Name	Port No.	Magnification Ratio Indicator	Multi-Copy Display	Manual Exposure Indicator	Operation Characteristics		CN/PJ No.
						ON	OFF	
PC54	Paper Leading Edge Detecting Sensor	APC6	↑	↑	□□■□□□□□□	When unblocked	When blocked	PJ17A-2A
PC55	1st Drawer Paper Take-Up Sensor	APA1	APA	↑	□□□□□□□■□	When unblocked	When blocked	PJ4A-2
PC56	2nd Drawer Paper Take-Up Sensor	PA5	PA1	5A	□□□■□□□□□	When unblocked	When blocked	PJ3A-7
PC57	Right Door Detecting Sensor	APA0	APA	4A	□□□□□□□□■	When unblocked	When blocked	PJ17A-5B
PC69	2nd Drawer Set Sensor	PA7	PA1	5A	□■□□□□□□□	When unblocked	When blocked	PJ12A-2
PC81	Scanner Reference Position Sensor	APB0	APB	4A	□□□□□□□□■	When unblocked	When blocked	PJ17A-7B
PC86	Mirror Reference Position sensor	APB2	↑	↑	□□□□□□■□□	When unblocked	When blocked	PJ22A-5
PC90	Lens Reference Position Sensor	APB1	APB	4A	□□□□□□□■□	When unblocked	When blocked	PJ22A-8
PC101	1st Drawer Paper Empty Sensor	APA2	APA	↑	□□□□□□■□□	When unblocked	When blocked	PJ4A-6
PC102	2nd Drawer Paper Empty Sensor	PA6	PA1	5A	□□■□□□□□□	When unblocked	When blocked	PJ3A-4

Symbol	Name	Port No.	Magnification Ratio Indicator	Multi-Copy Display	Manual Exposure Indicator	Operation Characteristics		CN/PJ No.
						ON	OFF	
PC111	Original Cover Detecting Sensor	PA2	PA0	↑	□□□□□□■□□	When unblocked	When blocked	PJ18A-2
PC112	Toner Hopper Home Position Sensor	APB6	APB	4A	□□■□□□□□□	When unblocked	When blocked	PJ17A-2B
PC113	Original Size Detecting Sensor FD2	PA6	PA0	5A	□□■□□□□□□	When unblocked (blinking)	When blocked	———
PC114	Original Size Detecting Sensor CD1	PA5	↑	↑	□□□■□□□□□	When unblocked (blinking)	When blocked	———
PC115	Original Size Detecting Sensor FD3	PA7	↑	↑	□■□□□□□□□	When unblocked (blinking)	When blocked	———
PC116	Original Size Detecting Sensor CD2	PA4	PA0	5A	□□□□■□□□□	When unblocked (blinking)	When blocked	———

PF-206, PF-112

✻3rd Drawer paper take-up LED on the Monitor Display lights up.

Symbol	Name	Port No.	Magnification Ratio Indicator	Multi-Copy Display	Manual Exposure Indicator	Operation Characteristics		CN/PJ No.
						ON	OFF	
M24	3rd Drawer Paper Lift-Up Motor	PA0	PA	1A	□□□□□□□□■	OFF	ON	PJ10A-3
M25	4th Drawer Paper Lift-Up Motor	PA2	↑	↑	□□□□□□■□□	OFF	ON	PJ10A-1
M26	Main Tray Elevator Motor (downward)	PA2	↑	↑	□□□□□□■□□	stop/upward	downward	PJ10A-2
M26	Main Tray Elevator Motor (upward)	PA3	↑	↑	□□□□□■□□□	stop/ downward	upward	PJ10A-1

Symbol	Name	Port No.	Magnification Ratio Indicator	Multi-Copy Display	Manual Exposure Indicator	Operation Characteristics		CN/PJ No.
						ON	OFF	
M27	Paper Shift Motor (return)	PA0	↑	↑	□□□□□□□□■	stop/transfer	return	PJ10A-3
M27	Paper Shift Motor (transfer)	PA1	↑	↑	□□□□□□□■□	stop/return	transfer	PJ10A-4
M28	Shift Gate Motor	PB2	PB	↑	□□□□□□■□□	OFF	ON	PJ10A-6
SL41	3rd Drawer Lock Solenoid	PA1	PA	2A	□□□□□□□■□	OFF	ON	PJ6A-2
PC1	Shift Tray Paper Empty Sensor	PD1	PD	1A	□□□□□□□■□	When unblocked	When blocked	PJ9A-9
PC2	Main Tray Lower Position Sensor	PC1	PC	2A	□□□□□□□■□	When unblocked	When blocked	PJ3A-3
PC3	Shifter Home Position Sensor	PC0	↑	↑	□□□□□□□□■	When unblocked	When blocked	PJ3A-4
PC4	Shift Return Position Sensor	PD1	PD	↑	□□□□□□□■□	When unblocked	When blocked	PJ3A-5
PC5	Elevator Motor Pulse Sensor	PF2	PF	1A	□□□□□□■□□	When unblocked	When blocked	PJ9A-5
PC6	Shift Motor Pulse Sensor	PD0	PD	↑	□□□□□□□□■	When unblocked	When blocked	PJ9A-12
PC7	3rd Drawer Set Sensor	PG2	PG	↑	□□□□□□■□□	When unblocked	When blocked	PJ8A-9B
PC11	Lower Left Door Set Sensor	PB1	PB	2A	□□□□□□□■□	When unblocked	When blocked	PJ5A-2
PC13	Duplex Unit Turnover Path sensor	PB0	↑	↑	□□□□□□□□■	When unblocked	When blocked	PJ5A-5

Symbol	Name	Port No.	Magnification Ratio Indicator	Multi-Copy Display	Manual Exposure Indicator	Operation Characteristics		CN/PJ No.
						ON	OFF	
PC17	Vertical Transport Sensor 3	PC3	PC	1A	□□□□□■□□□	When unblocked	When blocked	PJ8A-9A
PC18	Lower Right Door Set Sensor	PE2	PE	↑	□□□□□□■□□	When unblocked	When blocked	PJ8A-5A
PC19	3rd Drawer Paper Lift-Up Sensor	PG3	PG	1A	□□□□□■□□□	When unblocked	When blocked	PJ8A-12B
PC20	3rd Drawer Paper Empty Sensor	PC0	PC	↑	□□□□□□□□■	When unblocked	When blocked	PJ8A-2B
PC21	3rd Drawer Paper Take-Up Sensor	PE3	PE	↑	□□□□□■□□□	When unblocked	When blocked	PJ8A-2A
PC22	Vertical Transport Sensor 4	PC2	PC	↑	□□□□□□■□□	When unblocked	When blocked	PJ8A-12A
PC23	4th Drawer Paper Lift-Up Sensor	PF3	PF	↑	□□□□□■□□□	When unblocked	When blocked	PJ9A-2
PC24	4th Drawer Paper Empty Sensor	PD0	PD	↑	□□□□□□□□■	When unblocked	When blocked	PJ9A-12
PC25	3rd Drawer Set Sensor	PG2	PG	↑	□□□□□□■□□	When unblocked	When blocked	PJ8A-9B
PC26	4th Drawer Set Sensor	PF2	PF	↑	□□□□□□■□□	When unblocked	When blocked	PJ9A-5

Symbol	Name	Port No.	Magnification Ratio Indicator	Multi-Copy Display	Manual Exposure Indicator	Operation Characteristics		CN/PJ No.
						ON	OFF	
PC27	3rd Drawer Paper Lift-Up Motor Pulse Sensor	PC1	PC	↑	□□□□□□□■□	When unblocked	When blocked	PJ8A-5B
PC28	4th Drawer Paper Lift-Up Motor Pulse Sensor	PD1	PD	↑	□□□□□□□■□	When unblocked	When blocked	PJ9A-9
PC29	4th Drawer Paper Take-Up Sensor	PB3	PB	2A	□□□□□■□□□	When unblocked	When blocked	PJ4A-2
PC34	Shift Gate Position Sensor	PC1	PC	1A	□□□□□□□■□	When unblocked	When blocked	PJ3A-7
PC35	Lower Position Sensor	PB3	PB	2A	□□□□□■□□□	When unblocked	When blocked	PJ3A-6
UN21	Paper Descent Key	PC2	↑	2A	□□□□□□■□□	OFF	ON	PJ3A-2
PWB-E	Main Tray Paper Empty Board	PF3	PF	1A	□□□□□■□□□	When unblocked	When blocked	PJ9A-2

AD-11/PF-6D

✻The Duplex Unit LED on the Monitor Display lights up.

Symbol	Name	Port No.	Magnification Ratio Indicator	Multi-Copy Display	Manual Exposure Indicator	Operation Characteristics		CN/PJ No.
						ON	OFF	
M31	Duplex Unit Drive Motor	PB3	PB	1A	□□□□□■□□□	OFF	ON	PJ6G-2
M31	Duplex Unit Drive Motor lock signal	PE1	PE	↑	□□□□□□□■□	When locked	When turned	PJ6G-1
CL31	Duplex Unit Paper Take-Up Clutch	PA3	PA	↑	□□□□□■□□□	OFF	ON	PJ2G-7
SL31	Duplex Unit Gate Switching Solenoid	PH1	PH	↑	□□□□□□□■□	OFF	ON	PJ3G-5
SL32	Duplex Unit Rear Finger Solenoid	PH0	↑	↑	□□□□□□□□■	OFF	ON	PJ3G-7
PC8	Duplex Gate Home Position Sensor	PE0	PE	↑	□□□□□□□□■	When unblocked	When blocked	PJ7G-2
PC9	Front/Rear Edge Guide Plate Home Position Sensor	PC3	PC	↑	□□□□□■□□□	When unblocked	When blocked	PJ7G-5
PC14	Duplex Unit Trailing Sensor	PC1	↑	↑	□□□□□□□■□	When unblocked	When blocked	PJ3G-2
PC15	Duplex Unit Paper Empty Sensor	PC2	↑	↑	□□□□□□■□□	When unblocked	When blocked	PJ2G-4
PC16	Duplex Unit Paper Take-Up Sensor	PC0	↑	↑	□□□□□□□□■	When unblocked	When blocked	PJ2G-9

3 PAPER TRANSPORT FAILURE

3-1. Paper Misfeed

When a paper misfeed occurs in the copier, the corresponding Misfeed Location Monitor LED on the control panel blinks to let the user know where the misfeed has occurred. If an LED lights up steadily, it indicates that there might be a sheet of paper present at that particular location in the copier. If a paper misfeed occurs very frequently, carry out the necessary troubleshooting procedures according to the location of the misfeed.

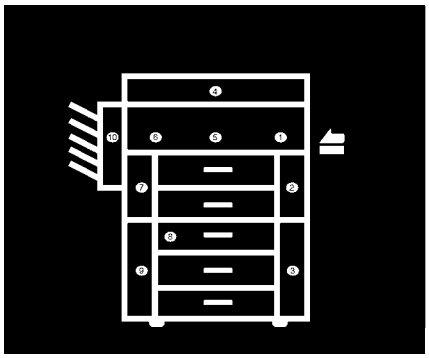

1139T025AA

Blinking Light	There is a misfeed at that location.
Steady Light	There might be a sheet of paper stopped at that location.

Blinking LED	Misfeed Location	Ref. Page	
②	Copier take-up and vertical transport	T-15~T-17	
③	Paper Feed Cabinet take-up and vertical transport	T-18~T-21	✻
①	Bypass port	T-22, T-23	
⑤	Transport/Separator	T-24, T-25	
⑥	Fusing/Exit	T-26, T-27	✻
⑦ ⑨	Duplex Unit vertical transport	T-28~T-30	✻
⑧	Duplex Unit storage	T-28~T-30	✻
③	Duplex Unit take-up	T-31, T-32	✻
⑩	Sorter/Staple Sorter	—	✻
④	Automatic/Duplexing Document Feeder	—	

✻ When option is installed

The paper misfeed, including a sheet of paper that is likely to be present, in the copier as well as in the paper feeder options is detected by the following sensors.

✻ When options are installed

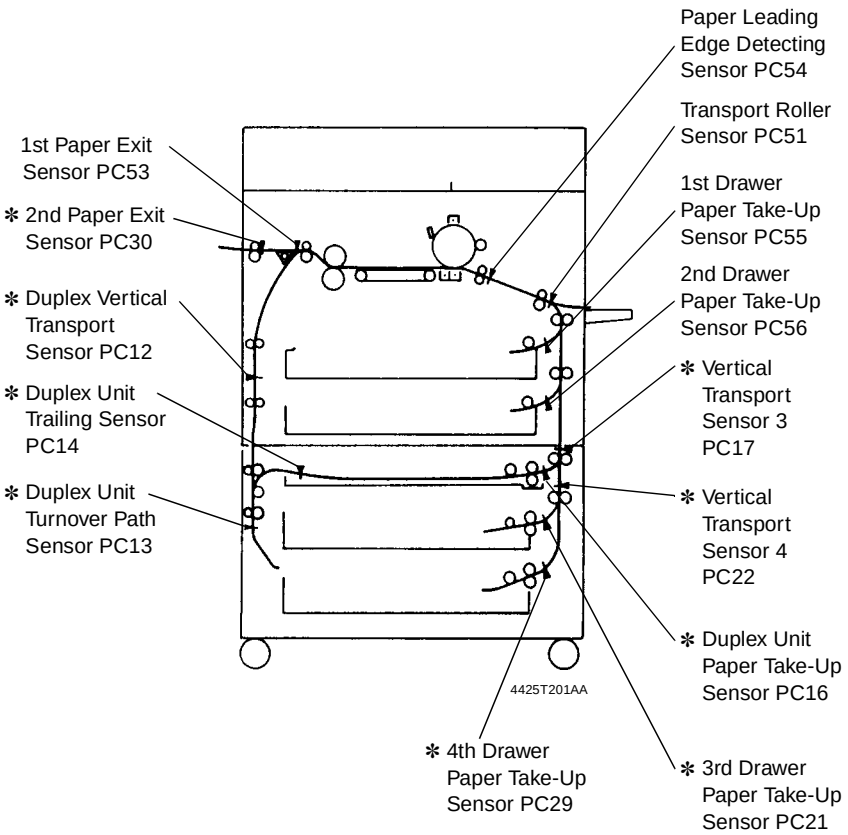

3-2. Misfeed Detected Types and Detection Timings

- The following table lists the types of misfeed detection classified by the misfeed locations and their corresponding detection timings.

Note
For the misfeed detection types and detection timings in the options, see the Service Manual for the options.

<Paper Take-up Misfeed>

Type	Detection Timing
Paper take-up failure detection	1st Drawer Paper Take-Up Sensor PC55 is not blocked (L) after the lapse of approx. 2.4 seconds after 1st Drawer Paper Take-Up Solenoid SL2 has been energized during the third paper take-up retry sequence.
	2nd Drawer Paper Take-Up Sensor PC56 is not blocked (L) after the lapse of approx. 2.4 seconds after 2nd Drawer Paper Take-Up Solenoid SL3 has been energized during the third paper take-up retry sequence.
Paper take-up trailing edge detection	PC55 is not unblocked (H) after the lapse of T seconds (which varies for paper sizes) after it has been blocked (L).
	PC56 is not unblocked (H) after the lapse of T seconds (which varies for paper sizes) after it has been blocked (L).
Leading edge detection by Transport Roller Sensor PC51	PC51 is not blocked (L) after the lapse of approx. 1.7 seconds after PC55 has been blocked (L).
	PC51 is not blocked (L) after the lapse of approx. 2.5 seconds after PC56 has been blocked (L).

<Multi-Bypass Misfeed>

Type	Detection Timing
Paper take-up failure detection	PC51 is not blocked (L) after the lapse of approx. 2.7 seconds after Manual Feed Paper Take-Up Clutch CL51 has been energized during the third paper take-up retry sequence.
Leading edge detection by Paper Leading Edge Detecting Sensor PC54	PC54 is not blocked (L) after the lapse of approx. 2.5 seconds after Paper Transport Clutch CL2 has been energized.

<Transport/Separator Misfeed>

Type	Detection Timing
Trailing edge detection by Transport Roller Sensor PC51	PC51 is not unblocked (H) after the lapse of T seconds (which varies for paper sizes) after the TRON signal has been input.
Leading edge detection by Paper Leading Edge Detecting Sensor PC54	PC54 is not blocked (L) after the lapse of approx. 1.5 seconds after PC51 has been blocked (L).
Trailing edge detection by PC54	PC54 is not unblocked (H) after the lapse of approx. 1.6 seconds after PC51 has been unblocked (H).

<Fusing/Exit Misfeed>

Type	Detection Timing
Leading edge detection by 1st Paper Exit Sensor PC53	PC53 is not unblocked (H) after the lapse of approx. 4.5 seconds after the TRON signal has been input.
Trailing edge detection by PC53	PC53 is not blocked (L) after the lapse of approx. 3.7 seconds after PC54 has been unblocked (H).
Leading edge detection by 2nd Paper Exit Sensor PC30	PC30 is not blocked (L) after the lapse of approx. 2 seconds after PC53 has been unblocked (H).
Trailing edge detection by PC30	PC30 is not unblocked (H) after the lapse of approx. 2 seconds after PC53 has been blocked (L).

3-3. Misfeed Clearing Procedures

(1) Copier Take-Up Misfeed

Symbol	Name
PC51	Transport Roller Sensor
PC55	1st Drawer Paper Take-Up Sensor
PC56	2nd Drawer Paper Take-Up Sensor (23 cpm Copier)
SL2	1st Drawer Paper Take-Up Solenoid
SL3	2nd Drawer Paper Take-Up Solenoid (23 cpm Copier)
CL2	Paper Transport Clutch
PWB-A	Master Board

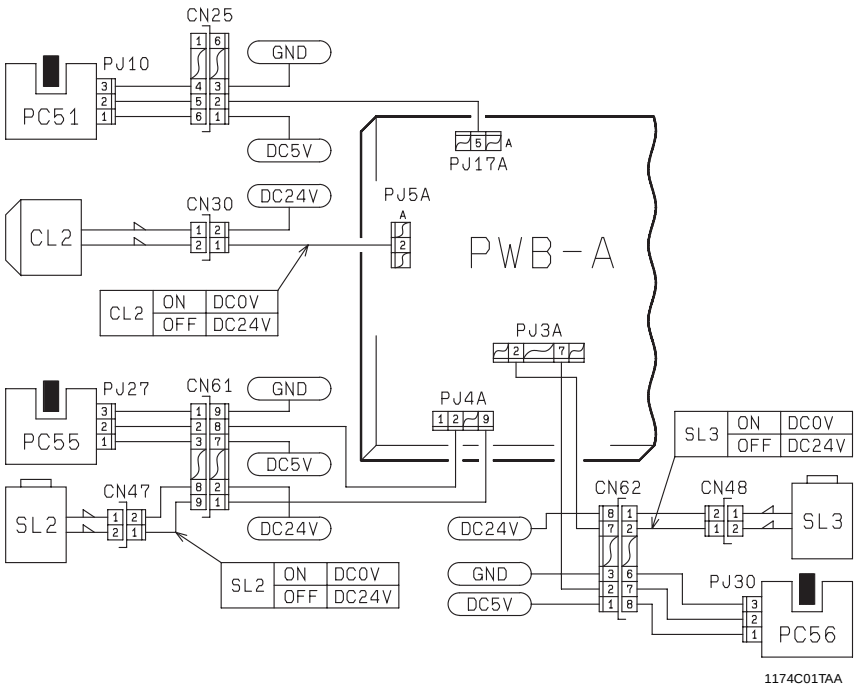

Copier Take-Up Misfeed Clearing Procedure

Symptom	Step	Check Item	Result	Action
• Paper is not taken up at all. • Paper is stationary before the Paper Take-Up Sensor.	1	Does the paper being used meet product specifications?	NO	Instruct the user to use the paper that meets product specifications.
	2	Is the paper curled, waved, or damp?	YES	Change the paper. Instruct the user in how to store the paper.
	3	Are the Separator Fingers on both sides of the Drawer in position?	NO	Instruct the user to load the paper so that it rests under the Fingers.
	4	Are the Separator Fingers deformed?	YES	Replace the Fingers.
	5	Is the Trailing Edge Stop or Edge Guide in good position?	NO	Instruct the user in how to position the Edge Stop or Guide.
	6	Are the Paper Lifting Springs positioned correctly?	NO	Change the position of the Springs or add one as necessary.
	7	Are the Paper Take-Up Rolls deformed, worn, or dirty with paper dust?	YES	Clean or replace the Paper Take-Up Rolls.
	8	Is a signal being output from PWB-A to the Paper Take-Up Solenoid? ✻ Does the voltage across PJ4A-9 (1st Drawer) or PJ3A-2 (2nd Drawer) on PWB-A and GND change from DC24V to DC0V when the Start Key is pressed?	YES	Adjust the Solenoid stroke. Check the Solenoid.
			NO	Replace PWB-A.
	9	Is the Clutch Spring deformed or worn?	YES	Replace the Clutch Spring.

Continued on next page

Symptom	Step	Check Item	Result	Action
• Paper is stationary before the Vertical Transport Roller. • Paper is stationary at the Vertical Transport Roller.	10	Check 1st/2nd Drawer Paper Take-Up Sensor (PC55/PC56). See p.T-2. PC55: PWB-A (IC4A) APA1 PC56: PWB-A (IC5A) PA5	YES	Replace PWB-A.
			NO	Check the Actuator for operation. Check the Paper Take-Up Sensor.
	11	Are the Vertical Transport Rollers deformed, worn, or dirty with paper dust?	YES	Clean or replace the Vertical Transport Rollers.
	12	Are the Paper Take-Up Guide Plate and Vertical Transport Guide Plate dirty or deformed?	YES	Clean, correct, or replace the Guide Plate.
	13	Is a signal being output from PWB-A to the Clutch? ✻ Does the voltage across PJ5A-2A on PWB-A and GND change from DC24V to DC0V when the Start Key is pressed?	YES	Check the Clutch.
			NO	Replace PWB-A.
• Paper is stationary near the Transport Roller.	14	Check Transport Roller Sensor PC51. See p. T-2 (PWB-A (IC4A) APC7).	YES	Replace or check the PWB-A.
			NO	Check the Actuator for operation. Check PC51.
	15	Are the Transport Rollers deformed, worn, or dirty with paper dust?	YES	Clean or replace the Transport Rollers.

(2) PF-206 Take-Up Misfeed (23 cpm Copier)

Symbol	Name
PC21	3rd Drawer Paper Take-Up Sensor
PC22	Vertical Transport Sensor 4
PC29	4th Drawer Paper Take-Up Sensor
M21	Vertical Transport Motor
M22	3rd Drawer Paper Take-Up Motor
M23	4th Drawer Paper Take-Up Motor
PWB-A	23 cpm Copier Master Board
PWB-A	PF-206 Master Board

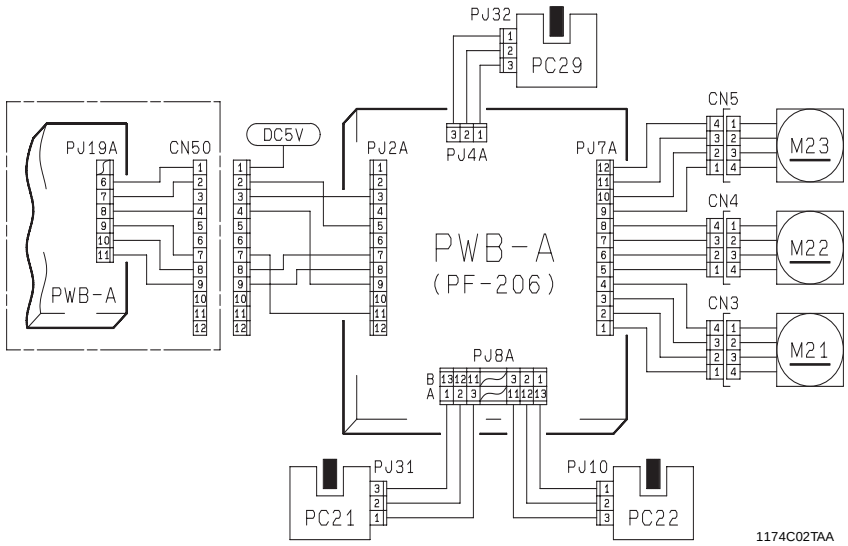

Paper Feed Cabinet Take-Up Misfeed Clearing Procedure

Symptom	Step	Check Item	Result	Action
• Paper is not taken up at all. • Paper is stationary before the Paper Take-Up Sensor.	1	Does the paper being used meet product specifications?	NO	Instruct the user to use the paper that meets product specifications.
	2	Is the paper curled, waved, or damp?	YES	Change the paper. Instruct the user in how to store the paper.
	3	Is the Paper Take-Up Motor turning when the Start Key is pressed?	NO	Check for possible overload. Replace PWB-A or PF-206 PWB-A. Check the Motor.
	4	Is the Paper Take-Up Roll or Separator Roll deformed, worn, or dirty with paper dust?	YES	Clean or replace the Paper Take-Up or Separator Roll.
• Paper is stationary before the Vertical Transport Rollers.	5	Check 3rd/4th Drawer Paper Take-Up Sensor (PC21/PC29). See p. T-2. PC21: (PF-206) PWB-A IC1A PE3. PC29: (PF-206) PWB-A IC2A PB3.	YES	Replace PWB-A or PF-206 PWB-A.
			NO	Check the Actuator for operation. Check the Paper Take-Up Sensor.
	6	Is Vertical Transport Motor M21 turning when the Start Key is pressed?	NO	Check for possible overload. Replace PWB-A or PF-206 PWB-A. Check the Motor.
	7	Is the Vertical Transport Roller or Guide Plate deformed, worn, or dirty with paper dust?	YES	Clean or replace the Vertical Transport Roller or Guide Plate.
• Paper is stationary near Vertical Transport Sensor 4 PC22.	8	Check Vertical Transport Sensor 4 PC22. See p. T-2 (PF-206) PWB-A IC1A PC2.	YES	Replace PWB-A or PF-206 PWB-A.
			NO	Check the Actuator for operation and check the Sensor.
• Paper is stationary before the copier.	9	Check Vertical Transport Sensor 4 PC22. See p. T-2 (PF-206) PWB-A IC1A PC2.	YES	Replace PWB-A or PF-206 PWB-A.
			NO	Check the Actuator for operation and check the Sensor.
	10	Is the Vertical Transport Roller or Guide Plate deformed, worn, or dirty with paper dust?	YES	Clean or replace the Vertical Transport Roller or Guide Plate.
			NO	Check the Paper Feed Cabinet for positive connection to the copier.

(3) PF-112 Take-Up Misfeed (23 cpm Copier)

Symbol	Name
PC21	3rd Drawer Paper Take-Up Sensor
PC22	Vertical Transport Sensor 4
M21	Vertical Transport Motor
M22	3rd Drawer Paper Take-Up Motor
PWB-A	23 cpm Copier Master Board
PWB-A	PF-112 Master Board

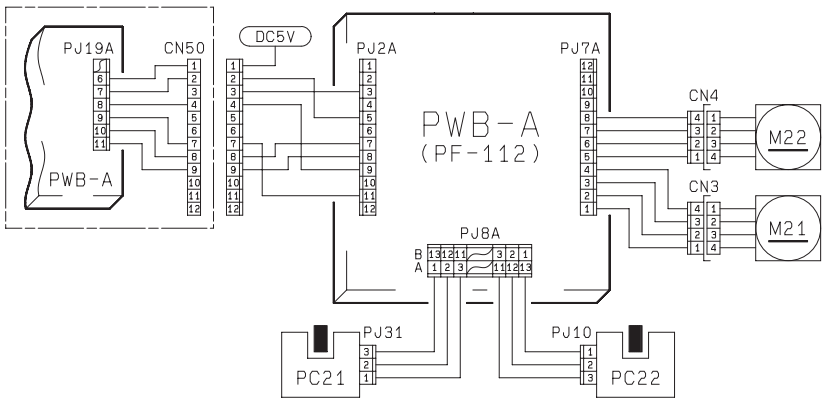

1174C03TAA

Paper Feed Cabinet Take-Up Misfeed Clearing Procedure

Symptom	Step	Check Item	Result	Action
• Paper is not taken up at all. • Paper is stationary before the Paper Take-Up Sensor.	1	Does the paper being used meet product specifications?	NO	Instruct the user to use the paper that meets product specifications.
	2	Is the paper curled, waved, or damp?	YES	Change the paper. Instruct the user in how to store the paper.
	3	Is the Paper Take-Up Motor turning when the Start Key is pressed?	NO	Check for possible overload. Replace PWB-A or PF-112 PWB-A. Check the Motor.
	4	Is the Paper Take-Up Roll or Separator Roll deformed, worn, or dirty with paper dust?	YES	Clean or replace the Paper Take-Up or Separator Roll.
• Paper is stationary before the Vertical Transport Rollers.	5	Check 3rd Drawer Paper Take-Up Sensor PC21. See p. T-2. PC21: (PF-112) PWB-A IC1A PE3.	YES	Replace PWB-A or PF-112 PWB-A.
			NO	Check the Actuator for operation. Check the Paper Take-Up Sensor.
	6	Is Vertical Transport Motor M21 turning when the Start Key is pressed?	NO	Check for possible overload. Replace PWB-A or PF-112 PWB-A. Check the Motor.
	7	Is the Vertical Transport Roller or Guide Plate deformed, worn, or dirty with paper dust?	YES	Clean or replace the Vertical Transport Roller or Guide Plate.
• Paper is stationary near Vertical Transport Sensor 4 PC22.	8	Check Vertical Transport Sensor 4 PC22. See p. T-2 (PF-112) PWB-A IC1A PC2.	YES	Replace PWB-A or PF-112 PWB-A.
			NO	Check the Actuator for operation and check the Sensor.
• Paper is stationary before the copier.	9	Check Vertical Transport Sensor 4 PC22. See p. T-2 (PF-112) PWB-A IC1A PC2.	YES	Replace PWB-A or PF-112 PWB-A.
			NO	Check the Actuator for operation and check the Sensor.
	10	Is the Vertical Transport Roller or Guide Plate deformed, worn, or dirty with paper dust?	YES	Clean or replace the Vertical Transport Roller or Guide Plate.
			NO	Check the Paper Feed Cabinet for positive connection to the copier.

(4) Bypass Port Misfeed

Symbol	Name
PC31	Manual Feed Paper Empty Sensor
PC54	Paper Leading Edge Detecting Sensor
SL51	Manual Feed Paper Take-Up Solenoid
CL2	Paper Transport Clutch
CL51	Manual Feed Paper Take-Up Clutch
PWB-A	Master Board

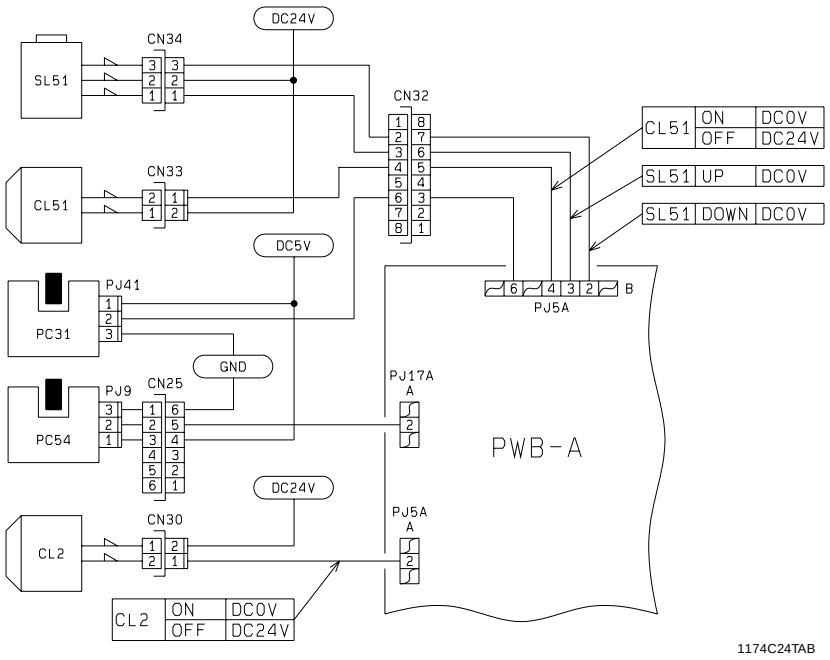

Bypass Port Misfeed Clearing Procedure

Symptom	Step	Check Item	Result	Action
• Paper is not detected.	1	Check Manual Feed Paper Empty Sensor PC31. See p. T-2 (PWB-A (IC4A) APC 3).	YES	Replace PWB-A.
			NO	Check the operation of the actuator of PC31. If it operates properly, replace PC31.
• Paper is not taken up at all.	2	Does the paper being used meet product specifications?	NO	Instruct the user to use the paper that meets product specifications.
	3	Is the paper curled, waved, or damp?	YES	Change the paper. Instruct the user in how to store the paper.
	4	Are the Paper Take-Up Rolls pressed against the paper stack when the Start Key is pressed? ✻ Does the voltage across PJ5A-2B on PWB-A and GND change from DC24V to DC0V when the Start Key is pressed?	YES	Adjust the stroke of the Solenoid. Check the Solenoid.
			NO	Replace PWB-A.
	5	Does the voltage across PJ5A-4B on PWB-A and GND change from DC24V to DC0V when the Start Key is pressed?	YES	Check the Clutch.
			NO	Replace PWB-A.
	6	Is the Pressure Pad or Guide Plate deformed or dirty?	YES	Clean or replace the Pressure Pad or Guide Plate.
	7	Are the Paper Take-Up Rolls deformed, worn, or dirty with paper dust?	YES	Clean or replace the Paper Take-Up Rolls.
• Paper is stationary near the Transport Roller.	8	Check Paper Leading Edge Detecting Sensor PC54. See p. T-2 (PWB-A (IC4A) APC6).	NO	Check the Actuator for operation. Check PC54.
	9	Does the voltage across PJ5A-2A on PWB-A and GND change from DC24V to DC0V when the Start Key is pressed?	YES	Check the Clutch.
			NO	Replace PWB-A.
	10	Is the Transport Roller or Guide Plate of the copier deformed, worn, or dirty with paper dust?	YES	Clean or replace the Vertical Transport Roller or Guide Plate.

(5) Transport/Separator Misfeed

Symbol	Name
PC51	Transport Roller Sensor
PC54	Paper Leading Edge Detecting Sensor
CL1	Synchronizing Roller Clutch
M4	Suction Fan Motor
PWB-A	Master Board

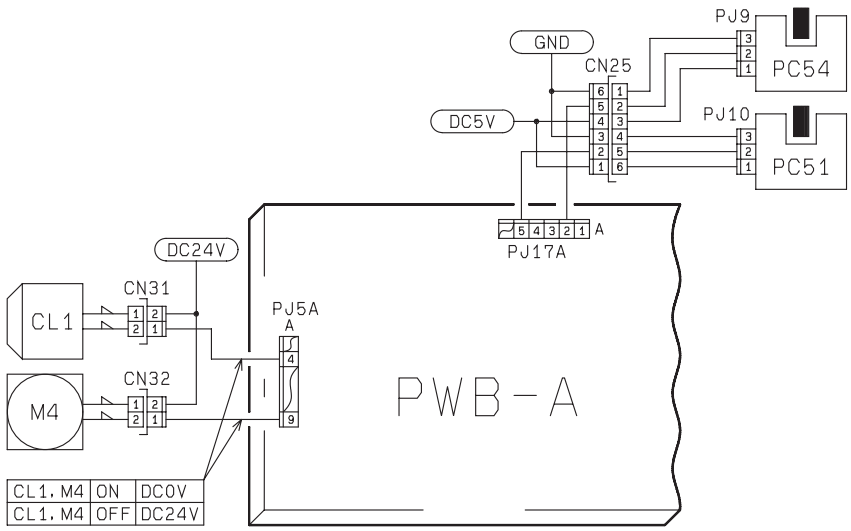

1174C05TAA

Transport/Separator Misfeed Clearing Procedure

Symptom	Step	Check Item	Result	Action
• Paper is stationary before the Synchronizing Roller.	1	Is the paper curled, waved, or damp?	YES	Change the paper. Instruct the user in how to store the paper.
	2	Check Paper Leading Edge Detecting Sensor PC54 See p. T-2 (PWB-A (IC4A) APC6).	YES	Replace PWB-A.
			NO	Check the Actuator for operation. Check PC54.
	3	Check Synchronizing Roller Clutch CL1. ✻ Does the voltage across PJ5A-4A on PWB-A and GND change from DC24V to DC0V after the Start Key has been pressed?	YES	Check the Clutch.
			NO	Replace PWB-A.
	4	Is a given length of loop formed before the Synchronizing Roller?	NO	Adjust the loop length or clean or replace the Transport Rollers.
• Paper is stationary near the PC Drum.	5	Is the Pre-Image Transfer Guide Plate deformed or dirty?	YES	Correct or clean the Guide Plate.
	6	Is the Corona Unit Cleaning Lever (Lower) in correct position?	NO	Place the Lever in position.
	7	Are the Image Transfer/ Paper Separator Corona Wires deteriorated or dirty?	YES	Clean or replace the Wires.
	8	Are the Paper Guides deformed or dirty?	YES	Clean or replace the Paper Guides.
	9	Are the Synchronizing Rollers deformed, worn, or dirty with paper dust?	YES	Clean or replace the Synchronizing Rollers.
• Paper is wedged at the Paper Separator Fingers.	10	Are the Paper Separator Fingers deformed or dirty?	YES	Correct or clean, or replace, the Paper Separator Fingers.
• Paper is stationary before the Suction Belts.	11	Check Transport Roller Sensor PC51. See p. T-2 (PWB-A (IC4A) APC7).	NO	Check the Actuator for operation. Check PC51.
	12	Check Paper Leading Edge Detecting Sensor PC54. See p. T-2 (PWB-A (IC4A) APC6).	YES	Replace PWB-A.
			NO	Check the Actuator for operation. Check PC54.
	13	Do the Suction Belts turn properly?	NO	Check the Belts and Drive Gear.
	14	Check Suction Fan Motor M4. ✻ Does the voltage across PJ5A-9A on PWB-A and GND change from DC24V to DC0V when the Start Key is pressed?	YES	Check the DC24V line. Check M4.
			NO	Replace PWB-A.

(6) Fusing/Exit Misfeed

Symbol	Name
PC53	1st Paper Exit Sensor
PC30	2nd Paper Exit Sensor
PC54	Paper Leading Edge Detecting Sensor
M4	Suction Fan Motor
PWB-A	Master Board

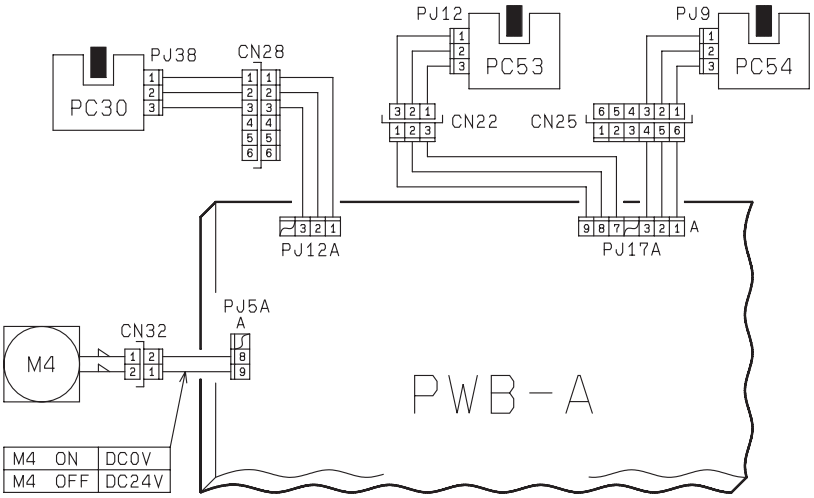

1174C06TAA

Fusing/Exit Misfeed Clearing Procedure

Symptom	Step	Check Item	Result	Action
• Paper is stationary before the Fusing Roller.	1	Is the paper curled, waved, or damp?	YES	Change the paper. Instruct the user in how to store the paper.
	2	Is the Guide Plate dirty with toner?	YES	Clean the Guide Plate. Check for possible scattering of toner.
	3	Do the Suction Belts turn properly?	NO	Check the Belts and Drive Gear.
	4	Check Suction Fan Motor M4. ✻ Does the voltage across PJ5A-9A on PWB-A and GND change from DC24V to DC0V when the Start Key is pressed?	YES	Check the DC24V line. Check M4.
			NO	Replace PWB-A.
• The leading edge of the paper is stationary near the Fusing Roller.	5	Are the Fusing Rollers scratched or dirty? Or, has the replacement time arrived for the Rollers?	YES	Clean or replace the Rollers.
	6	Are the Paper Separator Fingers dirty with toner or worn? Are their edges damaged?	YES	Clean or replace the Fingers.
	7	Is the Oil Roller dirty? Or, has the replacement time arrived for the Roller?	YES	Clean or replace the Roller.
• Paper is stationary after the Paper Exit Roller/Rolls.	8	Check 1st/2nd Paper Exit Sensor (PC53/PC30). See p. T-2. PC53: PWB-A (IC4A) APC5 PC30: PWB-A (IC4A) APB7	NO	Check the Actuator for operation. Check PC53 or PC30, or both.
	9	Check Paper Leading Edge Detecting Sensor PC54. See p. T-2 (PWB-A (IC4A) APC6).	YES	Replace PWB-A.
			NO	Check the Actuator for operation. Check PC54.

(7) Duplex Unit Vertical Transport/Storage Misfeed (23 cpm Copier)

Symbol	Name
PC12	Duplex Vertical Transport Sensor
PC13	Duplex Unit Turnover Path Sensor
PC14	Duplex Unit Trailing Sensor
PC15	Duplex Unit Paper Empty Sensor
PC53	1st Paper Exit Sensor
SL31	Duplex Unit Gate Switching Solenoid
SL61	Turnover/Exit Switching Solenoid
M31	Duplex Unit Drive Motor
PWB-A	23 cpm Copier Master Board
PWB-A	Master Board of PF-206/PF112/PF-6D
PWB-G	Duplex Unit Master Board

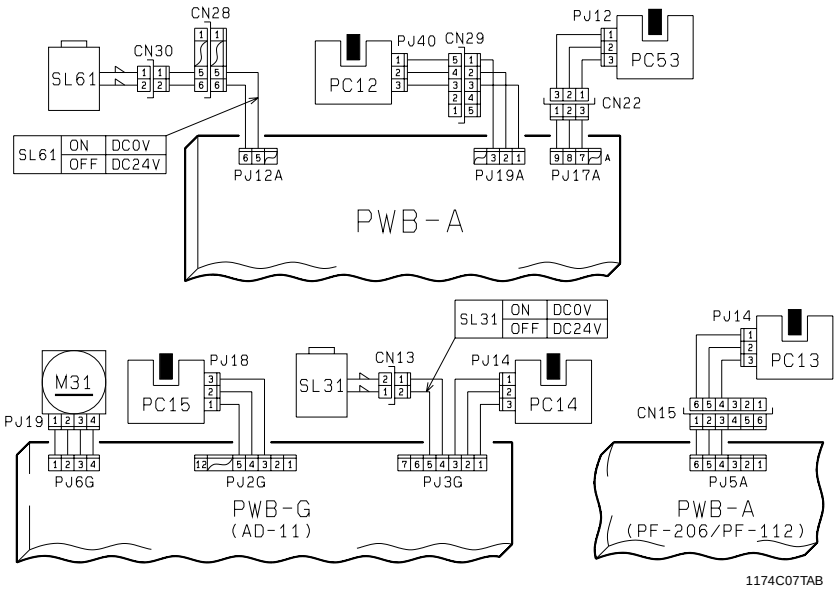

Duplex Unit Vertical Transport Misfeed Clearing Procedure

Symptom	Step	Check Item	Result	Action
• Paper is stationary near the Exit Section.	1	Is the paper curled, waved, or damp?	YES	Change the paper. Instruct the user in how to store the paper.
	2	Does the voltage across PJ12A-5 on PWB-A and GND change from DC24V to DC0V after the Start Key has been pressed?	YES	Adjust the stroke of the Solenoid or check the Solenoid.
			NO	Replace PWB-A.
	3	Are the Turnover/Exit Switching Plate and Upper and Lower Guide Plates deformed or dirty?	YES	Clean or replace the Plates.
• Paper is stationary near the Vertical Transport Section of the Duplex Unit.	4	Is drive being transmitted to the Vertical Transport Roller of the Duplex Unit? (Is Duplex Unit Drive Motor M31 turning after the Start Key has been pressed?)	NO	Check for possible overload. Check the Duplex Unit drive coupling or replace PWB-A of PF-206/PF-112/PF-6D, PWB-G, and/or M31.
	5	Check Duplex Vertical Transport Sensor PC12. See p. T-2 (PWB-A (IC5A) PA2).	NO	Check the Actuator for operation. Check PC12.
	6	Check 1st Paper Exit Sensor PC53. See p. T-2 (PWB-A (IC4A) APC5).	YES	Replace PWB-A.
			NO	Check the Actuator for operation. Check PC53.
• Paper is stationary near the Turnover Section.	7	Are the Paddle Roller, Slip Roller/Rolls, and Rolls B Release Lever deformed, worn, or dirty with paper dust?	YES	Clean or replace the Roller and/or Roll. Check the Release Lever mechanism.
			NO	Check the drive coupling from the Duplex Unit.
	8	Check Duplex Unit Turnover Path Sensor PC13. See p. T-2 (PF-206/PF-112/PF-6D) PWB-A IC2A PB0.	YES	Replace PWB-A of PF-206/PF-112/PF-6D.
			NO	Check the Actuator for operation and PC13.

Continued on next page

Symptom	Step	Check Item	Result	Action
• The leading edge of the paper is stationary inside the Duplex Unit.	9	Is the Paper Guide Mylar deformed or dirty?	YES	Clean or replace the Mylar.
			NO	Check the Mylar moving mechanism.
	10	Does the Gate Switching Plate operate properly? (Is Duplex Unit Gate Switching Solenoid SL31 energized for a paper length of 300 mm or longer?) ✻ Does the voltage across PJ3G-5 on PWB-G and GND change from DC24V to DC0V after the Start Key has been pressed?	YES	Adjust the stroke of the Solenoid or check the Solenoid.
			NO	Replace PWB-G or PWB-A of PF-206/PF-112/PF-6D.
	11	Check Duplex Unit Trailing Sensor PC14. See p. T-2. (AD-11) PWB-G IC1G PC1.	YES	Check the Actuator for operation and PC14.
			NO	Replace PWB-G or PWB-A of PF-206/PF-112/PF-6D.
• Paper is stationary near the take-up port of the Duplex Unit.	12	Check Duplex Unit Paper Empty Sensor PC15. See p. T-2. (AD-11) PWB-G IC1G PC2.	YES	Check the Actuator for operation and PC15.
			NO	Replace PWB-G or PWB-A of PF-206/PF-112/PF-6D.

(8) Duplex Unit Take-Up Misfeed (23 cpm Copier)

Symbol	Name
PC16	Duplex Unit Paper Take-Up Sensor
PC17	Vertical Transport Sensor 3
SL33	Duplex Unit Pick-Up Solenoid
CL31	Duplex Unit Paper Take-Up Clutch
M21	Vertical Transport Motor
PWB-A	Master Board of PF-206/PF-112/PF-6D
PWB-G	Duplex Unit Master Board

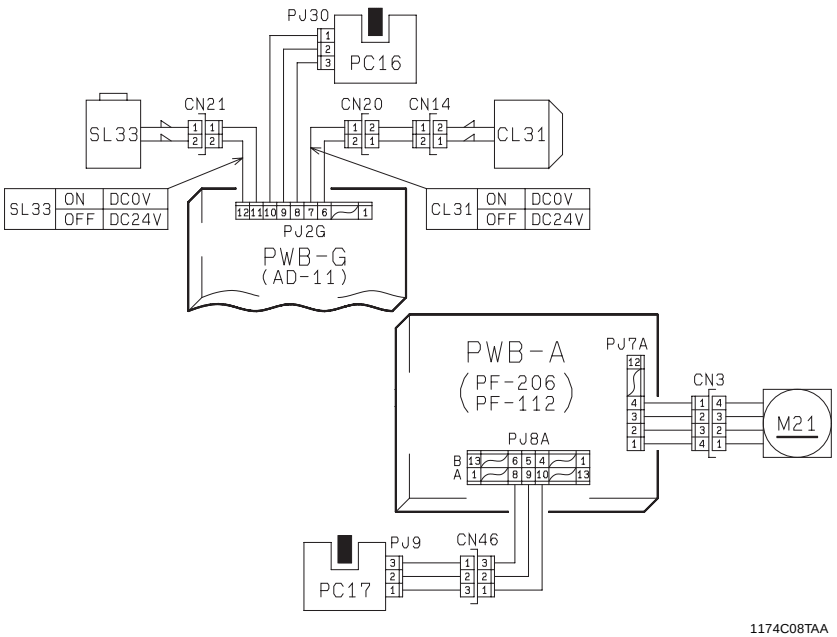

Duplex Unit Take-Up Misfeed Clearing Procedure

Symptom	Step	Check Item	Result	Action
• Paper is not taken up at all.	1	Is the paper curled, waved, or damp?	YES	Change the paper. Instruct the user in how to store the paper.
	2	Is Duplex Unit Pick-Up Solenoid SL33 energized when paper take-up is about to occur? ✻ Slide out the Duplex Unit and remove the PWB Cover. Then, slide the Duplex Unit back into the copier. Does the voltage across PJ2G-12 on PWB-G and GND change from DC24V to DC0V when the Start Key is pressed in the above condition?	YES	Adjust the stroke of the Solenoid or check the pick-up mechanism.
			NO	Replace PWB-G or PWB-A of PF-206/PF-112/PF-6D.
	3	Is Duplex Unit Paper Take-Up Clutch CL31 energized when a copy is taken up and fed into the copier from the Duplex Unit? ✻ Slide out the Duplex Unit and remove the PWB Cover. Then, slide the Duplex Unit back into the copier. Does the voltage across PJ2G-7 on PWB-G and GND change from DC24V to DC0V when the Start Key is pressed in the above condition?	YES	Check the Clutch.
			NO	Replace PWB-G or PWB-A of PF-206/PF-112/PF-6D.
	4	Are the Take-Up Roll, Feed Roll, and Separator Roll deformed, worn, or dirty with paper dust?	YES	Clean or replace the Rolls.
• Paper is stationary near the Vertical Transport Section.	5	Is Vertical Transport Motor M21 turning when a copy is taken up and fed into the copier from the Duplex Unit?	NO	Check for possible overload. Check the Duplex Unit drive coupling, or replace PWB-A of PF-206/PF-112/PF-6D, PWB-G, and/or M21.
	6	Are the Vertical Transport Rollers and Guide Plate deformed, worn, or dirty with paper dust?	YES	Clean or replace the Vertical Transport Rollers and Guide Plate.
	7	Check Duplex Unit Paper Take-Up Sensor PC16. (AD-11) PWB-G IC1G PC0.	NO	Check the Actuator for operation. Check PC16.
	8	Check Vertical Transport Sensor 3 PC17. See p. T-2 (PF-206/PF-112/PF-6D) PWB-A IC1A PC3.	YES	Replace PWB-G or PWB-A of PF-206/PF-112/PF-6D.
			NO	Check the Actuator for operation. Check PC17.

4 MALFUNCTIONS

4-1. Self-Diagnostic Function

The copier CPU is capable of self-diagnosis of the copier conditions and, when detecting a malfunction, it shows the corresponding malfunction code across the Zoom Ratio Indicator and Multi-Copy Display. Each malfunction code indicates the particular part which has developed a malfunction and the type of malfunction. A listing follows showing all malfunction codes and the description and possible causes of each malfunction.

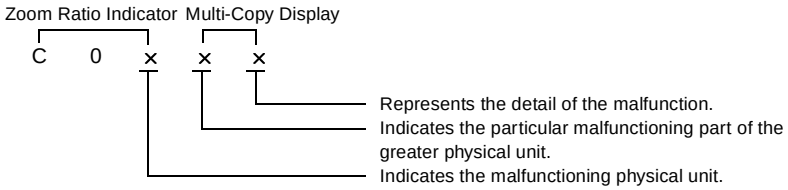

- Malfunctions can be reset by the following procedure.

Malfunction Resetting Procedure

- *Open and close the Front Door. The Trouble Reset Switch must be pressed after the Power is switched ON to reset the malfunction of the Fusing and Exposure Lamp Sections.*
- *Disconnect and connect the option or open and close the option door for malfunctions of options.*

✻ Copier/Paper Feed Cabinet (Option)

	Code	Description	Detection Timing
Drive	C0000	Main Drive Motor's failure to turn	The lock signal remains HIGH for a continuous 1 second or more period while M2 is energized.
	C0001	Main Drive Motor turning at abnormal timing	The lock signal remains LOW for a continuous 1 second or more period while M2 is deenergized.
	C0010	PC Drive Motor's failure to turn	The lock signal remains HIGH for a continuous 1 second or more period while M1 is energized.
	C0011	PC Drive Motor turning at abnormal timing	The lock signal remains LOW for a continuous 1 second or more period while M1 is deenergized.
	C004C	Cooling Fan Motor's failure to turn	The lock signal remains HIGH for a continuous 3 second or more period while M9 is energized (it turns at high speed).
	C0070	Toner Replenishing Motor's failure to turn	• Toner Hopper Home Position Sensor PC112 does not go from LOW to HIGH within 12 seconds after M8 has been energized. • PC112 does not go LOW within 12 seconds after M8 has been energized and PC112 gone HIGH.
	C0071	Toner Replenishing Motor turning at abnormal timing	PC112 is HIGH 2 seconds after M8 has been de energized.

✻ Copier/Paper Feed Cabinet (Option)

	Code	Description	Detection Timing
Exposure Lamp	C0400	Exposure Lamp's failure to turn ON	The output from AE Sensor Board PWB-H does not become 4.3V or less for the period between when LA1 turns ON and the Scanner starts a scan motion and when the Scanner reaches the Image Leading Edge position.
	C0410	Exposure Lamp turning ON at abnormal timing	With LA1 OFF, the output from PWB-H remains 4.1V or less for a continuous 2 second period at any timing while the Scanner is at the home position or the Original Cover is lowered.
Fusing Unit	C0500	Warm-up failure	If a given period of time has elapsed during warming-up, the surface temperature of the Upper Fusing Roller does not reach: • 50°C within 20 seconds; • 90°C within 20 seconds after it has reached 50°C; or • 150°C within 20 seconds after it has reached 90°C. The copier does not complete its warming-up cycle within 15 seconds after the above surface temperature has reached 150°C.
	C0510	Abnormally low fusing temperature	• The surface temperature of the Upper Fusing Roller remains less than 135°C for a continuous 1 second or more period after the copier has warmed up. • The surface temperature of the Upper Fusing Roller remains less than 80°C for a continuous 1 second or more period while in energy saving mode.
	C0520	Abnormally high fusing temperature	The surface temperature of the Upper Fusing Roller remains 230°C or more after the copier has warmed up.
Optical Section	C0600	Scanner Motor malfunction	• When the Scanner is at a position other than home, Scanner Reference Position Sensor PC81 does not go from HIGH to LOW after the lapse of 20 seconds after the Power Switch has been turned ON. • When the Scanner is at the home position, PC81 does not go from LOW to HIGH after the lapse of 5 seconds after the Scanner has started a scan motion. • PC81 does not go from HIGH to LOW after the lapse of 20 seconds after the Scanner has started a scan motion.
	C0610	Lens Motor malfunction	The output from Lens Reference Position Sensor PC90 does not go from HIGH to LOW, or vice versa, after the lapse of 15 seconds after M6 has started turning.
	C0620	Mirror Motor malfunction	• The output from the Mirror Reference Position Sensor PC86 does not go from HIGH to LOW after the lapse of 10 seconds after M7 has started turning. • The output from PC86 does not go from LOW to HIGH after the lapse of 3 seconds after M7 has started turning.
Sensors	C0F10	Faulty AE Sensor level	The output from PWB-H does not fall within the 2V – 4V range during the initial F5 mode.
	C0F30	ATDC Sensor malfunction	The output from UN3 remains 0.4V or less, or 4.6V or more, for a continuous 2 second period 2 seconds after PC Drive Motor M2 has started turning.

✻ Malfunctions Detected by Copiers, Except in Europe

	Code	Description	Detection Timing
Original Size Detecting Board	C0F02	Original size detection error (Defective CPU)	• Either UN2 is faulty or a communication error occurs with PWB-A. • Under normal conditions: The fixed-cycle pulse signal (Busy) remains HIGH or LOW for 3 seconds or more. • When the Power Switch is ON: The Busy signal remains HIGH or LOW for 5 seconds or more.
	C0FE2	Original Size Detecting Sensor ❷ failure	<Detection Timing> After having read the output data from PC113 to PC116, UN2 determines that there is a failure. <Sensor Layout> (Metric Areas) • ❷: PC113, ❸: PC115 (option), ❹: PC114, ❺: PC116 (option) ✻ PC115 and PC116 are standard for Mixed inch/metric areas. • A to E: Sensor locations 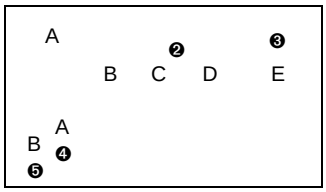 (Inch Areas) • ❷: PC113, ❸: PC115 (option), ❹: PC114, ❺: PC116 (option) 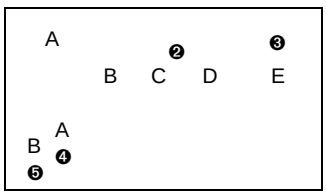
	C0FE4	Original Size Detecting Sensor ❸ failure	
	C0FE6	Original Size Detecting Sensors ❷ and ❸ failure	
	C0FE8	Original Size Detecting Sensor ❹ failure	
	C0FEA	Original Size Detecting Sensors ❷ and ❹ failure	
	C0FEC	Original Size Detecting Sensors ❸ and ❹ failure	
	C0FEE	Original Size Detecting Sensors❷, ❸ and ❹ failure	
	C0FF0	Original Size Detecting Sensor ❺ failure	
	C0FF2	Original Size Detecting Sensors ❷ and ❺ failure	
	C0FF4	Original Size Detecting Sensors ❸ and ❺ failure	
	C0FF6	Original Size Detecting Sensors ❷, ❸ and ❺ failure	
	C0FF8	Original Size Detecting Sensors ❹ and ❺ failure	
	C0FFA	Original Size Detecting Sensors ❷, ❹ and ❺ failure	
	C0FFC	Original Size Detecting Sensors ❸, ❹ and ❺ failure	
	C0FFE	Original Size Detecting Sensors ❷, ❸, ❹ and ❺ failure	

	Code	Description	Detection Timing
PF-206	C0900	3rd Drawer Paper Lift-Up Sensor malfunction	See the PF-206 Service Manual.
	C0904	3rd Drawer Paper Lift-Up Motor malfunction	
	C0950	4th Drawer Paper Lift-Up Sensor malfunction	
	C0954	4th Drawer Paper Lift-Up Motor malfunction	
AD-11/PF-6D	C0d00	Duplex Unit Front/Rear Edge Guide Plates home position detection failure	See the AD-11/PF-6D Service Manual.
	C0d20	Duplex Unit Trailing Gate Unit home position detection failure	
	C0d50	Duplex Unit Drive Motor's failure to turn	
	C0d51	Duplex Unit Drive Motor turning at abnormal timing	

	Code	Description	Detection Timing
PF-112	C0990	Main Tray upward motion failure	See the PF-112 Service Manual.
	C0991	Main Tray downward motion failure	
	C0992	Main Tray downward motion failure	
	C0993	Main Tray upward motion failure	
	C0994	Main Tray Elevator Motor's failure to turn	
	C0996	3rd Drawer lock release failure	
	C0998	Shifter transfer failure	
	C0999	Shifter return failure	
	C099A	Shifter return failure	
	C099b	Shifter transfer failure	
	C099c	Shifter Motor's failure to turn	
	C0F79	• 3rd Drawer Paper Empty Sensor failure • Main Tray Paper Empty Board failure • Shift Tray Paper Empty Sensor	
	C099E	Shift Gate position detecting failure	
	C099F	Shift Gate position detecting failure	

✻ Malfunctions for Other Options

	Code	Description	Detection Timing
ST-104	C0b10	Faulty Paper Clamp Unit movement	See the ST-104/S-106 Service Manual.
	C0b11	Faulty Paper Clamp Unit movement	
	C0b30	Paper Aligning Motor malfunction (Paper Aligning Bar remaining at home position)	
	C0b31	Paper Aligning Motor malfunction (Paper Aligning Bar not at home position)	
	C0b50	Improper stapling action (Stapler Arm remaining at the home position)	
	C0b51	Improper stapling action (Stapler Arm not at home position)	
	C0b52	Improper stapling action (stapling action occurring with no staples driven into the paper)	
ST-104/S-106	C0b60	Faulty Bin movement (Defective Bin Moving Motor)	
	C0b61	Faulty Bin movement (Defective drive)	
	C0b62	Faulty Bin movement (Defective Bin Positioning Sensor)	
	C0b63	Faulty Bin movement (Defective Bin Lower Limit Position Sensor)	
	C0b64	Faulty Bin movement (M1 speed detection failure)	

4-2. Troubleshooting Procedures

(1) C0000: Main Drive Motor's failure to turn
C0001: Main Drive Motor turning at abnormal timing

Symbol	Name
M2	Main Drive Motor
PWB-A	Master Board

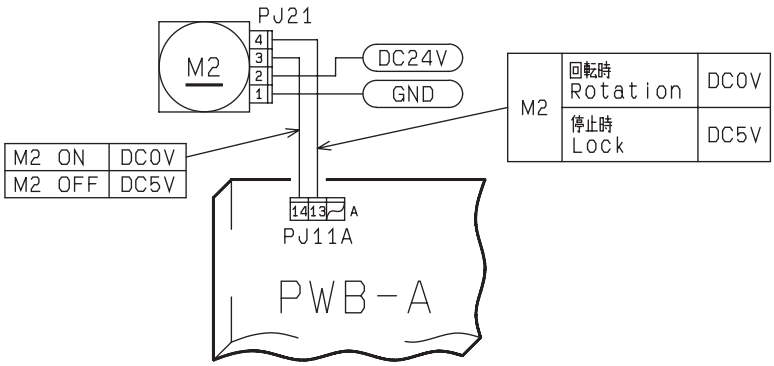

1174C25TAA

Step	Check Item	Result	Action
1	Is C0001 being shown?	YES	Begin with step 5.
2	Does M2 start to turn when the Start Key is pressed?	NO	Check rolls/rollers and gears for possible overload.
3	Does the voltage across PJ11A-14A on PWB-A and GND change from DC5V to DC0V when the Start Key is pressed?	NO	Replace PWB-A.
4	Does the voltage across PJ11A-13A on PWB-A and GND remain DC5V when the Start Key is pressed?	YES	Replace M2.
		NO	Replace PWB-A.
5	Does the voltage across PJ11A-14A on PWB-A and GND remain DC0V when the Power Switch is turned ON?	YES	Replace PWB-A.
6	Does the voltage across PJ11A-13A on PWB-A and GND remain DC0V when the Power Switch is turned ON?	YES	Replace M2.
		NO	Replace PWB-A.

(2) C0010: PC Drive Motor's failure to turn
C0011: PC Drive Motor turning at abnormal timing

Symbol	Name
M1	PC Drive Motor
PWB-A	Master Board

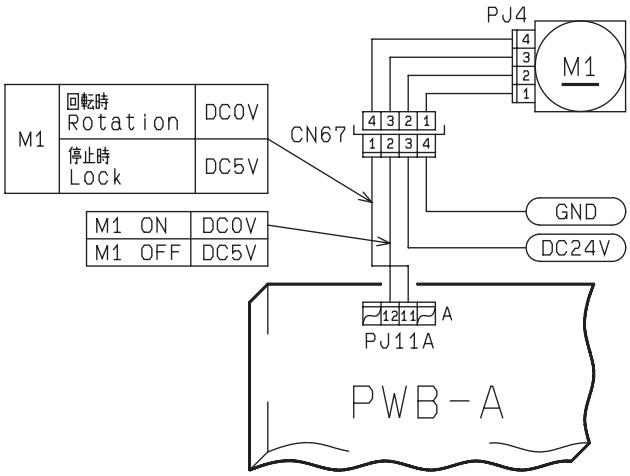

1174C26TAA

Step	Check Item	Result	Action
1	Is C0011 being shown?	YES	Begin with step 5.
2	Does M1 start to turn when the Start Key is pressed?	NO	Check gears for possible overload.
3	Does the voltage across PJ11A-12A on PWB-A and GND change from DC24V to DC0V when the Start Key is pressed?	NO	Replace PWB-A.
4	Does the voltage across PJ11A-11A on PWB-A and GND remain DC5V when the Start Key is pressed?	YES	Replace M1.
		NO	Replace PWB-A.
5	Does the voltage across PJ11A-12A on PWB-A and GND remain DC0V when the Power Switch is turned ON?	YES	Replace PWB-A.
6	Does the voltage across PJ11A-11A on PWB-A and GND remain DC0V when the Power Switch is turned ON?	YES	Replace M1.
		NO	Replace PWB-A.

(3) C004C: Cooling Fan Motor's failure to turn

Symbol	Name
M9	Cooling Fan Motor
PWB-A	Master Board

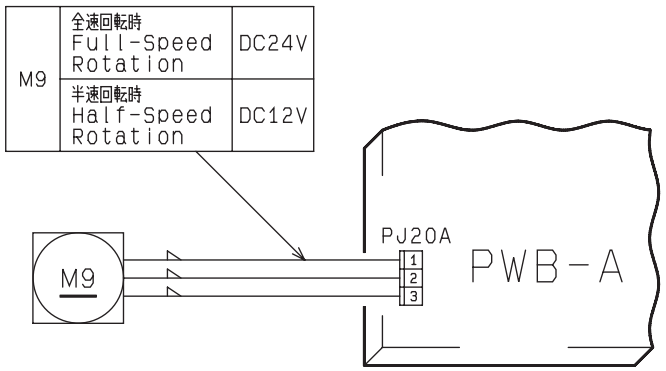

1174C27TAA

C004C

Step	Check Item	Result	Action
1	Does the voltage across PJ20A-1 on PWB-A and GND change from DC24V to DC12V when the Power is switched ON?	YES	Replace M9.
		NO	Replace PWB-A.

(4) C0070: Toner Replenishing Motor's failure to turn
C0071: Toner Replenishing Motor turning at abnormal timing

Symbol	Name
PC112	Toner Hopper Home Position Sensor
M8	Toner Replenishing Motor
PWB-A	Master Board

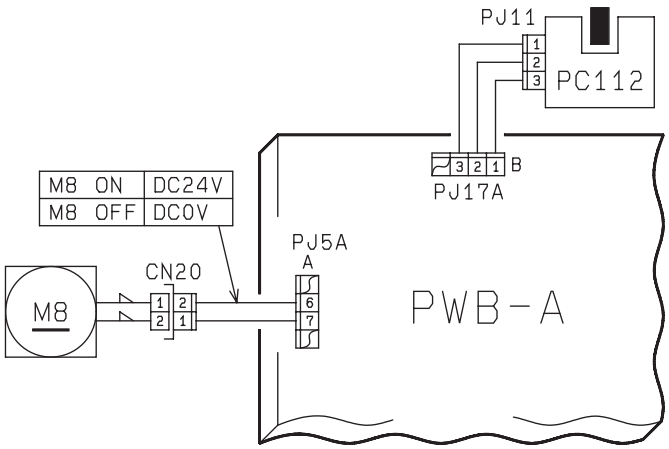

1174C28TAA

Step	Check Item	Result	Action
1	Is C0071 being shown?	YES	Begin with step 3.
2	Does the Toner Bottle turn when two or three copies are made with the Original Cover raised?	YES	Perform step 3.
		NO	Perform step 4.
3	Make two or three copies with the Original Cover raised. Does the voltage across PJ17A-2B on PWB-A and GND change to DC0V when the Toner Bottle is stopped and to DC5V when the Bottle is turned during the copy cycle?	YES	Replace PWB-A.
		NO	Check the Bottle Holder or PC112.
4	Make two or three copies with the Original Cover raised. Does the voltage across PJ5A-6A on PWB-A and GND change to DC0V when the Toner Bottle is stopped and to DC24V when the Bottle is turned during the copy cycle?	YES	Replace M8.
		NO	Replace PWB-A.

(5) C0400: Exposure Lamp's failure to turn ON
C0410: Exposure Lamp turning ON at abnormal timing

Symbol	Name
LA1	Exposure Lamp
TF2	Exposure Lamp Thermal Fuse
PWB-A	Master Board
PWB-H	AE Sensor Board
PU1	Exposure Lamp Regulator

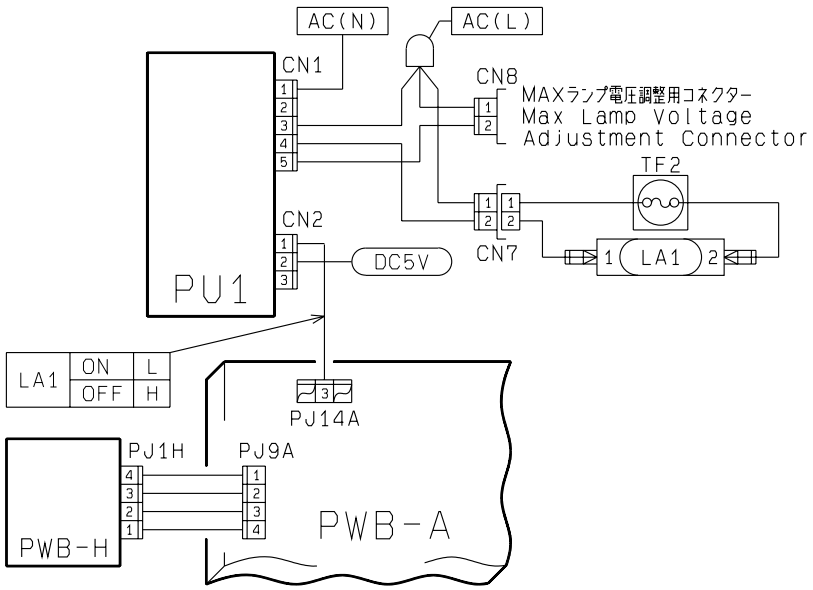

1174C13TAC

C0400

Step	Check Item	Result	Action
1	Does LA1 light up when the Start Key is pressed?	YES	Check the photo receiver of the AE Sensor for contamination. Replace PWB-H or PWB-A.
2	Does the voltage across PJ14A-3 on PWB-A and GND become DC4.3V or less when LA1 turns ON?	NO	Replace PWB-A.
3	Disconnect CN7 (2P). Is there continuity across CN7-1 and 2 on the LA1 side?	NO	Check LA1 and TF2 for continuity.
4	Is the voltage across CN1-1 and 3 on PU1 AC100V?	YES	Replace PU1.
		NO	Check Power Supply Unit PU2 and Power Supply Board PWB-C.

C0410

Step	Check Item	Result	Action
1	Does LA1 turn ON when the Power Switch is turned ON or in the standby state?	NO	Check to see if the photo receiver of the AE Sensor is receiving extraneous light. Replace PWB-H or PWB-A.
2	Does the voltage across PJ14A-3 on PWB-A and GND remain DC4.1V or lower when the Power Switch is turned ON or in the standby state?	YES	Replace PWB-A.
		NO	Replace PU1.

(6) C0500: Warm-up failure
C0510: Abnormally low fusing temperature
C0520: Abnormally high fusing temperature

Symbol	Name
H1	Fusing Heater Lamp
TS1	Fusing Thermoswitch
TH1	Fusing Thermistor
PWB-A	Master Board
SSR1	Fusing Heater Lamp SSR

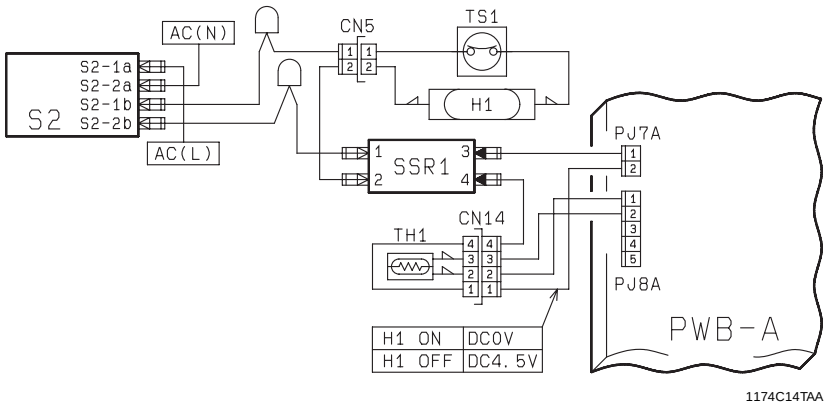

C0500, C0510

✻ After resetting a C0510 condition, C0500 will be shown if the same problem recurs. For this reason, the same troubleshooting procedure is used for C0500 and C0510.

Step	Check Item	Result	Action
1	Does H1 light up when the Power Switch is turned ON?	YES	Check TH1 for installation or clean it.
		NO	Begin with step 3.
2	Disconnect CN14 (4P). Is the resistance across CN14-2 and 3 on the TH1 side infinity?	YES	Replace TH1.
		NO	Replace PWB-A.
3	Does the voltage across PJ7A-2 on PWB-A and GND change from DC5V to DC0V when the Front Door is closed with the Power Switch ON?	NO	Replace PWB-A.
4	Disconnect CN5 (2P). Is there continuity across CN5-1 and 2 on the Fusing Unit side?	YES	Replace SSR1.
		NO	Check H1 and TF1 for continuity.

C0520

Step	Check Item	Result	Action
1	Does H1 remain lit up even after the copier has completed warming up?	YES	Begin with step 2.
		NO	Begin with step 3.
2	Does the voltage across PJ7A-2 on PWB-A and GND remain DC0V even after the copier has completed warming up?	YES	Replace PWB-A.
		NO	Replace SSR1.
3	Disconnect CN14 (4P). Is the circuit across CN14-2 and 3 on the Fusing Unit side short-circuited?	YES	Replace TH1.
		NO	Replace PWB-A.

(7) C0600: Scanner Motor malfunction
C0610: Lens Motor malfunction
C0620: Mirror Motor malfunction

Symbol	Name
M5	Scanner Motor
M6	Lens Motor
M7	Mirror Motor
PC81	Scanner Reference Position Sensor
PC86	Mirror Reference Position Sensor
PC90	Lens Reference Position Sensor
PWB-A	Main Control Board
PWB-F	23 cpm Copier Motor Drive Board
PWB-E	15/18 cpm Copier Motor Drive Board

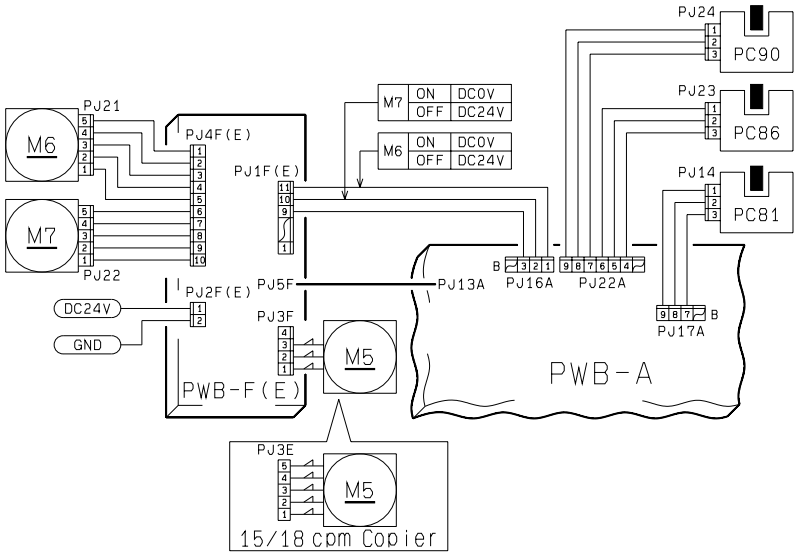

1174C35TCB

C0600

Step	Check Item	Result	Action
1	Are all connectors on Motor Drive Board plugged in securely?	NO	Plug them in securely.
2	Check Scanner Reference Position Sensor PC81. See p. T-2 (PWB-A (IC4A) APB0)	YES	Check the Scanner Drive Cable for tension and overload. Or, replace PWB-A.
		NO	Check PC81.
3	Is the Scanner drive faulty?	YES	Correct or replace the faulty part.
		NO	Replace Motor Drive Board or M5.

C0610

Step	Check Item	Result	Action
1	Does M6 start turning after the Power Switch has been turned ON?	YES	Perform step 4.
2	Does the voltage across PJ16A-1B on PWB-A and GND change from DC24V to DC0V after the Power Switch has been turned ON?	YES	Replace Motor Drive Board or M6.
		NO	Replace PWB-A.
3	Check Lens Reference Position Sensor PC90. See p. T-2 (PWB-A (IC4A) APB1)	YES	Check the Lens Drive Cable for tension and overload. Or, replace PWB-A.
		NO	Check PC90.

C0620

Step	Check Item	Result	Action
1	Does M7 start turning when the mirror is out of position and the Power Switch is turned ON?	YES	Perform step 3.
2	Does the voltage across PJ16A-2B on PWB-A and GND change from DC24V to DC0V when the Mirror moves?	YES	Replace Motor Drive Board or M7.
		NO	Replace PWB-A.
3	Check Mirror Reference Position Sensor PC86. See p. T-2 (PWB-A (IC4A) APB2)	YES	Check for overload. Or, replace PWB-A.
		NO	Check PC86.

(8) C0900: 3rd Drawer Paper Lift-Up Sensor malfunction
C0904: 3rd Drawer Paper Lift-Up Motor malfunction
C0950: 4th Drawer Paper Lift-Up Sensor malfunction
C0954: 4th Drawer Paper Lift-Up Motor malfunction

Symbol	Name
PC19	3rd Drawer Paper Lift-Up Sensor
PC23	4th Drawer Paper Lift-Up Sensor
PC27	3rd Drawer Paper Lift-Up Motor Pulse Sensor
PC28	4th Drawer Paper Lift-Up Motor Pulse Sensor
M24	3rd Drawer Paper Lift-Up Motor
M25	4th Drawer Paper Lift-Up Motor
PWB-A	PF-206 Master Board

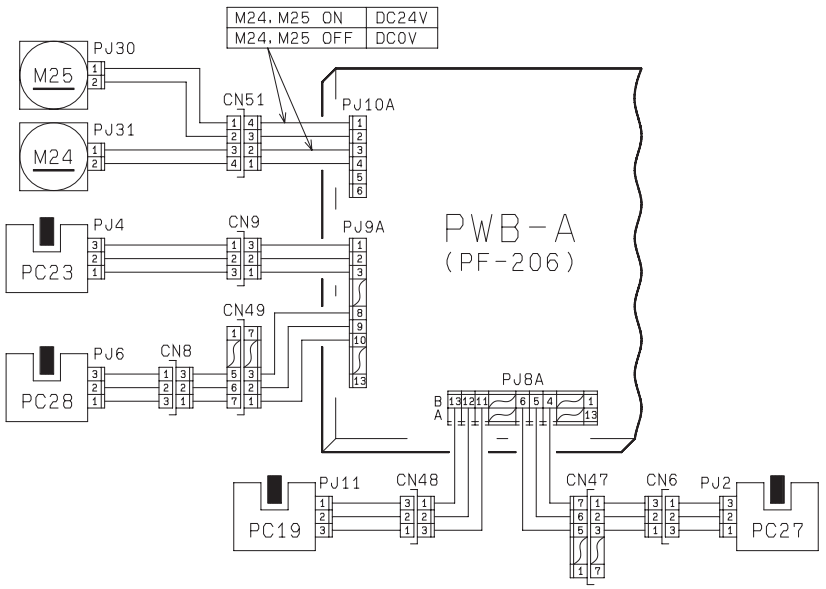

C0900, C0950

Step	Check Item	Result	Action
1	Is C0950 being shown?	YES	Perform step 3.
2	Check 3rd Drawer Paper Lift-Up Sensor PC19. See p. T-2 (PF-206) PWB-A IC1A PG3.	YES	Replace PF-206 PWB-A.
		NO	Check the Paper Pressure Releasing mechanism and PC19.
3	Check 4th Drawer Paper Lift-Up Sensor PC23. See p. T-2 (PF-206) PWB-A IC1A PF3.	YES	Replace PF-206 PWB-A.
		NO	Check the Paper Pressure Releasing mechanism and PC23.

C0904, C0954

Step	Check Item	Result	Action
1	Is C0954 being shown?	YES	Begin with step 5.
2	Slide out the 3rd Drawer and slide it back into the copier. Does M24 turn at this time?	YES	Perform step 4.
3	Does the voltage across PJ10A-3 on PF-206 PWB-A and GND change from DC0V to DC24V, and then back to DC0V again, after the 3rd Drawer has been slid back into the copier?	YES	Replace M24.
		NO	Replace PF-206 PWB-A.
4	Check 3rd Drawer Paper Lift-Up Motor Pulse Sensor PC27. See p. T-2 (PF-206) PWB-A IC1A PC1.	YES	Replace PF-206 PWB-A. Or, check the gears for possible overload.
		NO	Check the Pulse Disk and PC27.
5	Slide out the 4th Drawer and slide it back into the copier. Does M25 turn at this time?	YES	Perform step 7.
6	Does the voltage across PJ10A-1 on PF-206 PWB-A and GND change from DC0V to DC24V, and then back to DC0V again, after the 4th Drawer has been slid back into the copier?	YES	Replace M25.
		NO	Replace PF-206 PWB-A.
7	Check 4th Drawer Paper Lift-Up Motor Pulse Sensor PC28. See p. T-2 (PF-206) PWB-A IC1A PD1.	YES	Replace PF-206 PWB-A. Or, check the gears for possible overload.
		NO	Check the Pulse Disk and PC28.

(9) C0990: Main Tray Upward Motion Failure
C0991: Main Tray Downward Motion Failure
C0992: Main Tray Downward Motion Failure
C0993: Main Tray Upward Motion Failure
C0994: Main Tray Elevator M26's Failure to Turn

Symbol	Name
PC2	Main Tray Lower Position Sensor
PC5	Elevator Motor Pulse Sensor
PC19	3rd Drawer Paper Lift-Up Sensor
PC35	Lower Position Sensor
M26	Elevator Motor
PWB-H	Cabinet Transport Board
PWB-A	PF-112 Master Board

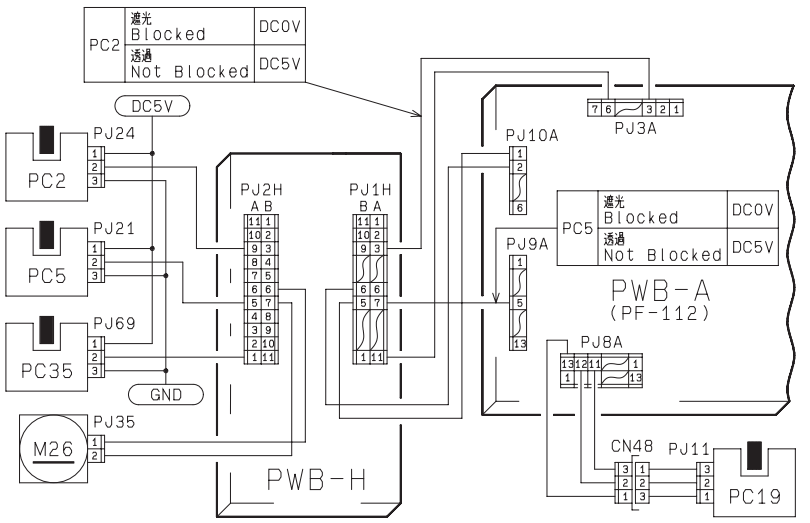

1174C17TAA

C0990, C0991

Step	Check Item	Result	Action
1	Check 3rd Drawer Paper Lift-Up Sensor PC19. See p. T-2 (PF-112) PWB-A IC1A PG3.	YES	Replace PF-112 PWB-A.
		NO	Check the Paper Pressure Releasing mechanism and PC19.

C0992, C0993

Step	Check Item	Result	Action
1	Check Lower Position Sensor PC35. See p. T-2. (PF-112) PWB-A IC2A PB3	YES	Replace PF-112 PWB-A.
		NO	Check PC35.
2	Check Main Tray Lower Position Sensor PC2. See p. T-2. (PF-112) PWB-A IC2A PC1	YES	Replace PF-112 PWB-A.
		NO	Check PC2.

C0994

Step	Check Item	Result	Action
1	Does M26 turn when the Paper Descent key is pressed?	YES	Perform step 3.
2	Does the voltage across PJ10A-1 (down) on PF-112 PWB-A and GND, and across PJ10A-2 (up) and GND, change from DC0V to DC24V when the Drawer is slid in or the Paper Descent key is pressed?	YES	Replace M26 or check PWB-H and flat cable.
		NO	Replace PF-112 PWB-A.
3	Does the voltage across PJ9A-5 on PF-112 PWB-A and GND change in the range between DC0V and DC5V while M26 is turning?	YES	Replace PF-112 PWB-A.
		NO	Check the pulse disk, Gear, and Sensor.

(10) C0998: Shifter Transfer Failure
C0999: Shifter Return Failure
C099A: Shifter Return Failure
C099b: Shifter Transfer Failure
C099c: Shifter Motor M27's Failure to Turn

Symbol	Name
PC3	Shifter Home Position Sensor
PC4	Shifter Return Position Sensor
PC6	Shift Motor Pulse Sensor
M27	Paper Shift Motor
PWB-H	Cabinet Transport Board
PWB-A	PF-112 Master Board

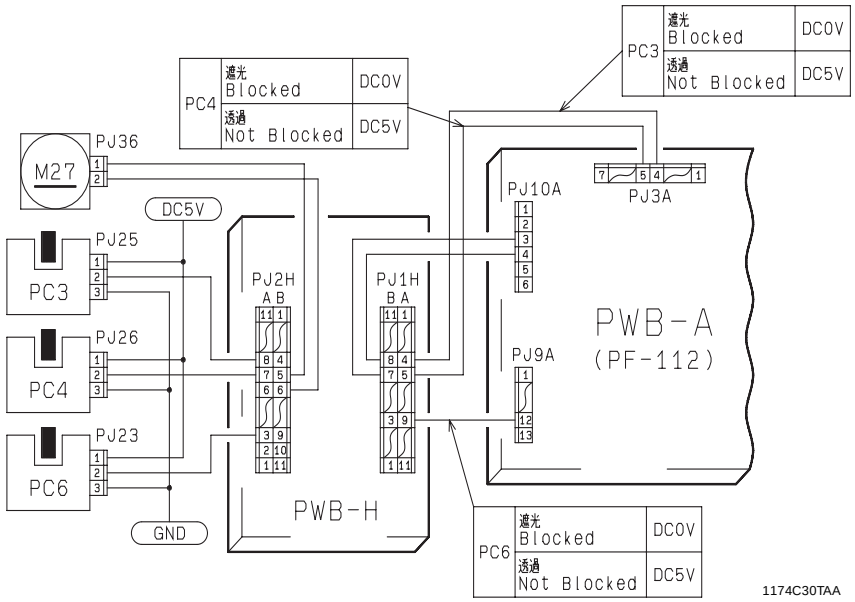

C0998, C0999

Step	Check Item	Result	Action
1	Check Shifter Return Position Sensor PC4. See p. T-2 (PF-112) PWB-A IC2A PD1.	YES	Replace PF-112 PWB-A.
		NO	Check PWB-H, flat cable and PC4.

C099A, C099b

Step	Check Item	Result	Action
1	Check Shifter Home Position Sensor PC3. See p. T-2 (PF-112) PWB-A IC2A PC0	YES	Replace PF-112 PWB-A.
		NO	Check PWB-H, flat cable and PC3.

C099C

Step	Check Item	Result	Action
1	Does M27 turn when the Drawer is slid in with a paper stack loaded in the Shift Tray?	YES	Perform step 3.
2	Does the voltage across PJ10A-4 (moving to right) on PF-112 PWB-A and GND change from DC0V to DC24V when doing step 1?	YES	Replace M27 or check PWB-H and flat cable.
		NO	Replace PF-112 PWB-A.
3	Does the voltage across PJ9A-12 on PF-112 PWB-A and GND change from DC0V to DC5V while M27 is turning?	YES	Replace PF-112 PWB-A.
		NO	Check the pulse disk, Gear, and Sensor.

(11) C099E: Shift Gate Position Detecting Failure
C099F: Shift Gate Position Detecting Failure
C0996: 3rd Drawer Lock Release Failure
C0F79: Paper Empty Sensor Failure

Symbol	Name
PC1	Shift Tray Paper Empty Sensor
PC7	3rd Drawer Set Sensor
PC20	3rd Drawer Paper Empty Sensor
PC34	Shift Gate Position Detecting Sensor
SL41	3rd Drawer Lock Solenoid
PWB-E	Main Tray Paper Empty Board
PWB-H	Cabinet Transport Board
PWB-A	PF-112 Master Board

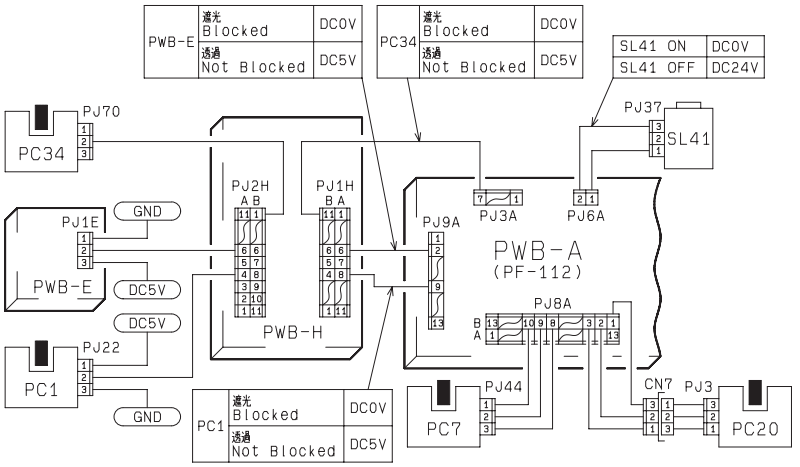

1174C31TAA

C099E, C099F

Step	Check Item	Result	Action
1	Check Shift Gate Position Detecting Sensor PC34. See p. T-2 (PF-112) PWB-A IC1A PC1.	YES	Replace PF-112 PWB-A.
		NO	Check PWB-H, flat cable and PC34.

C0996

Step	Check Item	Result	Action
1	Does the voltage across PJ6A-2 on PF-112 PWB-A and GND change from DC0V to DC24V when the Paper Descent Key is pressed and the Main Tray has completed downward motion?	YES	Replace SL41.
		NO	Replace PF-112 PWB-A.
2	Check 3rd Drawer Set Sensor PC7. See p. T-2 (PF-112) PWB-A IC1A PG2	YES	Replace PF-112 PWB-A.
		NO	Check PWB-H, flat cable and PC25.

C0F79

Step	Check Item	Result	Action
1	Check 3rd Drawer Paper Empty Sensor PC20. See p. T-2 (PF-112) PWB-A IC1A PC0.	YES	Replace PF-112 PWB-A.
		NO	Check PC20.
2	Check Main Tray Paper Empty Board PWB-E. See p. T-2 (PF-112) PWB-A IC1A PF3.	YES	Replace PF-112 PWB-A.
		NO	Check PWB-H, flat cable and PWB-E.
3	Check Shift Tray Paper Empty Sensor PC1. See p. T-2 (PF-112) PWB-A IC1A PD1	YES	Replace PF-112 PWB-A.
		NO	Check PWB-H, flat cable and PC1.

(12) C0d00: Duplex Unit Front/Rear Edge Guide Plates home position detection failure
C0d20: Duplex Unit Trailing Gate Unit home position detection failure
C0d50: Duplex Unit Drive Motor's failure to turn
C0d51: Duplex Unit Drive Motor turning at abnormal timing

Symbol	Name
PC8	Duplex Gate Home Position Sensor
PC9	Front/Rear Edge Guide Plate Home Position Sensor
M31	Duplex Unit Drive Motor
M32	Gate Motor
M33	Front/Rear Edge Guide Drive Motor
PWB-G	Duplex Unit Master Board

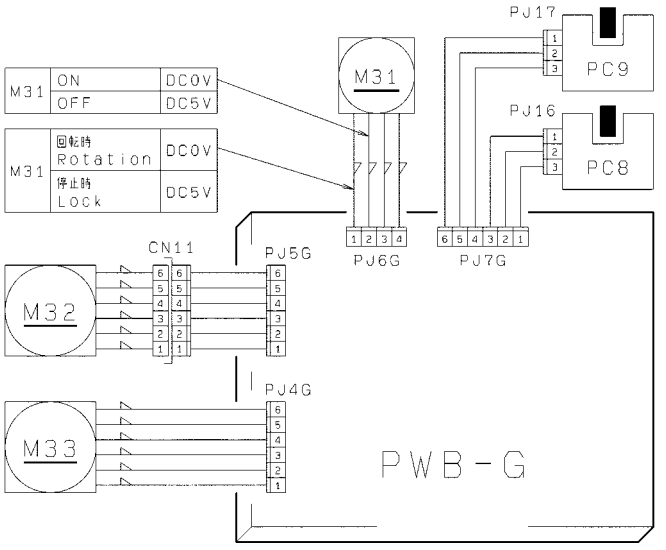

1151C11TAA

C0d00, C0d20

Step	Check Item	Result	Action
1	Is C0d20 being shown?	YES	Perform step 4.
2	Does Front/Rear Edge Guide Drive Motor M33 start turning when the Power Switch is turned ON or the Duplex Unit slid into position?	NO	Check for possible overload. Replace PWB-G, PWB-A of PF-206/PF-112/PF-6D, or M33.
3	Check Front/Rear Edge Guide plate Home position sensor PC9. See p. T-2 (AD-11) PWB-G IC1G PC3.	YES	Replace PWB-G or PWB-A of PF-206/PF-112/PF-6D.
		NO	Check PC9.
4	Does Gate Motor M32 start turning when the Power Switch is turned ON or the Duplex Unit slid into position?	NO	Check for possible overload. Replace PWB-G, PWB-A of PF-206/PF-112/PF-6D, or M32.
5	Check Duplex Gate Home Position Sensor PC8. See p. T-2 (AD-11) PWB-G IC1G PE0.	YES	Replace PWB-G or PWB-A of PF-206/PF-112/PF-6D.
		NO	Check PC8.

C0d50, C0d51

Step	Check Item	Result	Action
1	Is C0d51 being shown?	YES	Begin with step 5.
2	Does Duplex Unit Drive Motor M31 start turning when the Start Key is pressed.	NO	Check the roller, rolls, and gears for possible overload.
3	Does the voltage across PJ6G-2 on PWB-G and GND change from DC5V to DC0V when the Start Key is pressed?	NO	Replace PWB-G or PWB-A of PF-206/PF-112/PF-6D.
4	Does the voltage across PJ6G-1 on PWB-G and GND remain DC5V when the Start Key is pressed?	YES	Replace M31.
		NO	Replace PWB-G or PWB-A of PF-206/PF-112/PF-6D.
5	Does the voltage across PJ6G-2 on PWB-G and GND remain DC0V when the Power Switch is turned ON?	YES	Replace PWB-G or PWB-A of PF-206/PF-112/PF-6D.
6	Does the voltage across PJ6G-1 on PWB-G and GND remain DC0V when the Power Switch is turned ON?	YES	Replace M31.
		NO	Replace PWB-G or PWB-A of PF-206/PF-112/PF-6D.

(13) C0F10: Faulty AE Sensor level
C0F30: ATDC Sensor malfunction

Symbol	Name
PWB-A	Master Board
PWB-H	AE Sensor Board
UN3	ATDC Sensor

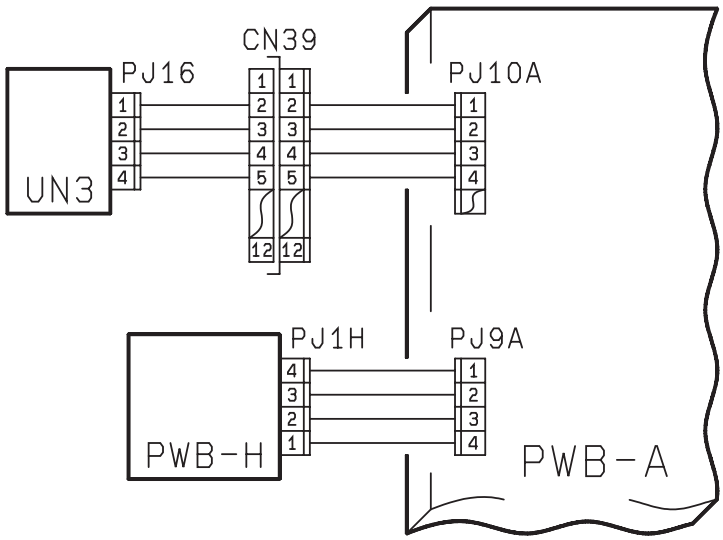

C0F10

Step	Check Item	Result	Action
1	Is the voltage across PJ9A-3 on PWB-A and GND in the range between DC2V and DC4V when the Start Key is pressed in the F3 operation?	YES	Replace PWB-A.
		NO	Check the photo receiver of the AE Sensor for contamination or replace PWB-H.

C0F30

Step	Check Item	Result	Action
1	Is the voltage across PJ10A-3 on PWB-A and GND DC0V after the Power Switch has been turned ON?	YES	Check the ATDC Sensor and the connection between the Imaging Unit and copier.
2	Is the voltage across PJ10A-3 on PWB-A and GND in the range between DC0.5V and DC4.5V after the Start Key has been pressed?	YES	Replace PWB-A.
		NO	Replace the ATDC Sensor.

(14) C0F02: Original size detection error (Defective CPU)
C0FE2 to C0FFE: Original Size Detecting Sensor failure

Symbol	Name
PC113	Original Size Detecting Sensor FD2
PC114	Original Size Detecting Sensor CD1
PC115	Original Size Detecting Sensor FD3
PC116	Original Size Detecting Sensor CD2
UN2	Original Size Detecting Board
PWB-A	Master Board

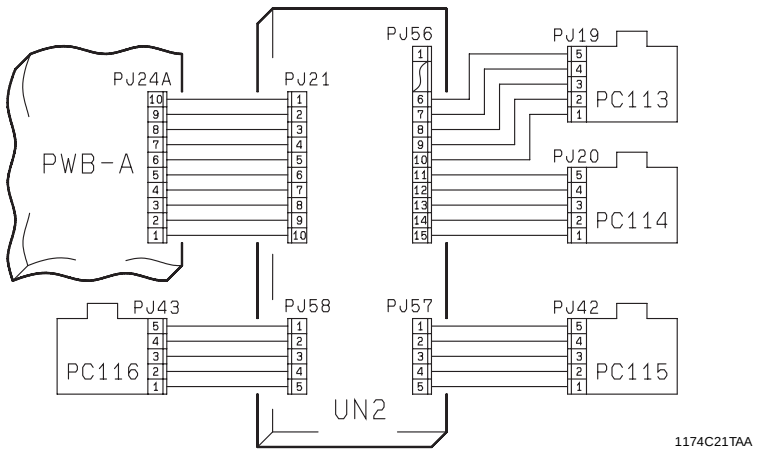

C0F02

Step	Check Item	Result	Action
1	Is the jumper connector fitted properly across J1 and J2 on UN2?	NO	• Change the position of the jumper connector.
2	Is PJ21 (CN2) plugged securely into UN2 and PJ24A into PWB-A?	NO	• Plug them in securely.
3	Does the LED of I/O port check PWB-A (IC5A) PA3 blink after the Power Switch has been turned ON?	YES	• Change PWB-A.
		NO	• Change UN2.

C0FE2 to C0FFE

Step	Check Item	Result	Action
1	Is the jumper connector fitted properly across J1 and J2 on UN2?	NO	• Change the position of the jumper connector.
2	Is each Original Size Detecting Sensor installed at the correct position?	NO	• Reinstall.
3	Is the malfunction code redisplayed after the corresponding Original Size Detecting Sensor has been changed?	YES	• Change UN2 or PWB-A.

(15) Power is not Turned ON

Symbol	Name
PWB-A	Master Board
PWB-C	Power Supply Board
PU1	Exposure Lamp Regulator
PU2	Power Supply Unit
S1	Power Switch
S2	Front Door Interlock Switch

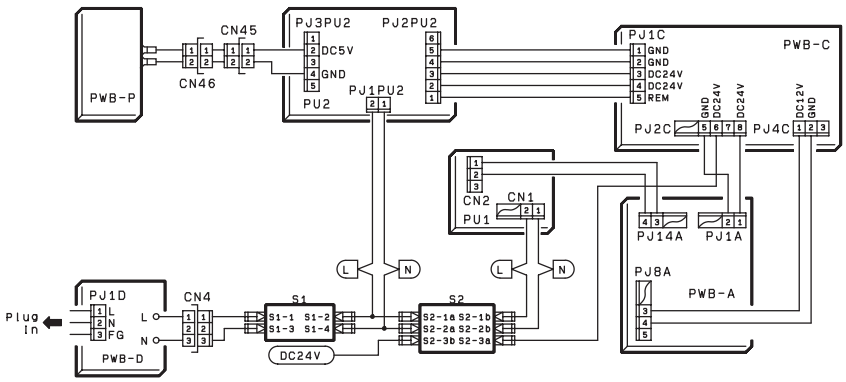

1174C33TAB

Symptom	Step	Check Item	Result	Action
Power is not supplied to the copier at all.	1	Is the source voltage being supplied to the circuit across PJ1-1 and 2 of PU2?	NO	Check Fuse or line voltage.
	2	Is the voltage across PJ2-2 of PU2 and GND, and across PJ2-3 on PU2 and GND, DC24V?	NO	Check Fuse of PU2 or replace PU2.
	3	Is the voltage across PJ2-1 of PU2 and GND DC24V?	NO	Check Fuse of PU2 or replace PU2.
	4	Is the voltage across PJ2C-6 on PWB-C and GND, and across PJ2C-8 on PWB-C and GND, DC24V?	NO	Check Fuse of PWB-C or replace PWB-C.
Only the control panel Indicators light up.	5	Only the control panel Indicators light up?	YES	Replace PWB-A.

✻ If the problem persists even after the above procedures, the harness is probably short-circuited.
Check the harnesses.

(16) E1, E2

Symbol	Name
UN3	ATDC Sensor
F4	I/U Fuse
PWB-A	Master Board

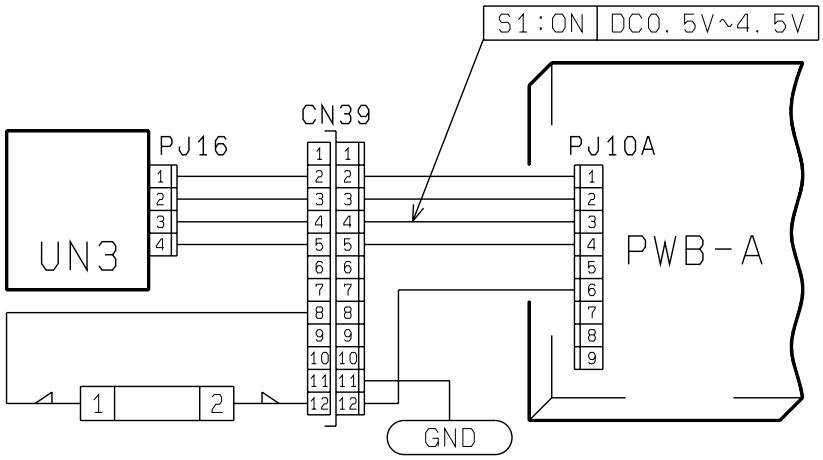

Code	Step	Check Item	Result	Action
E1	1	Is the seal peeled off the opening or starter been fully charged?	NO	Peel off the seal and turn the Power Switch OFF, then ON.
	2	Is the voltage across PJ10A-3 on PWB-A and GND in the range between DC0.5V and DC4.5V after the Start Key has been turned ON?	YES	Replace PWB-A.
			NO	Replace the ATDC Sensor.
E2	3	Is the voltage across PJ10A-6 on PWB-A and GND 0V?	YES	Replace PWB-A.
			NO	Replace F4 or PWB-A.

5 IMAGE FAILURES

5-1. Image Failure Troubleshooting

Image failures have many possible causes. For troubleshooting, it is necessary to determine whether a failure is attributable to a basic cause or any other cause.

In this chapter, troubleshooting is divided into “initial checks” and “troubleshooting procedures classified by image failure”. If an image failure has occurred, first make the initial checks, then proceed to the corresponding image failure troubleshooting procedure.

5-2. Initial Checks

1. Place of installation
- Is the source voltage normal? Does the voltage vary greatly?
- Is the copier installed in a hot, humid place or in a place where temperatures vary sharply?
- Is the copier installed in a dusty place?
- Is the copier subjected to direct sunlight?
- Is the copier level?

2. Copy paper
- Is the recommended paper used?
  ➨Load recommended paper and make copies to see if the problem persists.
- Is the paper damp?
  ➨Load new paper and make copies to see if the problem persists.

3. Original
- Does the original used have a reddish background or is it written in light pencil?
  ➨Use the Test Chart to check the image.
- Is the original transparent or are transparencies being used?
  ➨Cover with white paper and make a copy.
- Are the Original Glass and ADF Transport Belt dirty or scratched?
  ➨If dirty, clean with alcohol. If scratched, replace.

4. PM parts (supplies)
- Have the PM parts (supplies), such as the PC Drum, Cleaning Blade, and corona wires, reached the end of their cleaning/replacement cycles?

5. Adjustment items (registration, focus, AE level, etc.)
- Among the adjustment items given in DIS/REASSEMBLY, ADJUSTMENT, is there any adjustment that may remedy the image failure?

5-3. Troubleshooting Procedures Classified by Image Failures

<Image Failure Samples>

1. Blank copy



2. Black copy



3. Low image density

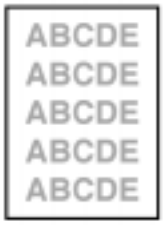

4. Foggy background

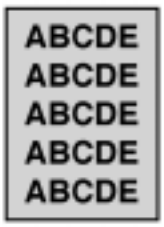

5. Black streaks or bands

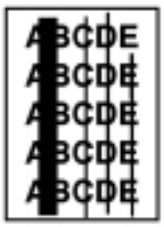

6. Black spots



7. Blank streaks or bands

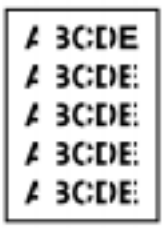

8. Void areas

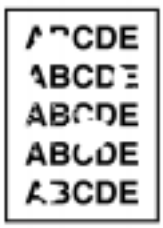

9. Smear on back

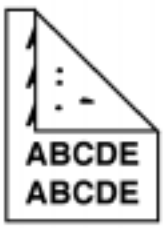

1149T012AA

(1) Blank copy

Cause	Step	Check Item	Result	Action
Charging failure	1	Is the PC Drum Charge Corona installed correctly?	NO	Install correctly.
	2	Are the PC Drum Charge Corona wire and grid mesh normal?	NO	Check and replace if necessary.
	3	Is the wiring between High Voltage Unit HV1 and corona wire normal?	YES	Replace HV1.
			NO	Correct the wiring.
Developing Unit out of position	4	Is the PC Unit inserted all the way into position?	NO	Fully tighten the knob.
	5	Are the Ds Rolls in contact with the PC Drum?	NO	Reinstall the Developing Unit.
	6	Is the Developing Unit connector plugged in?	NO	Plug it in.
	7	Is the drive transmission to the Developing Unit normal?	NO	Check and replace parts if necessary.
Image transfer failure	8	Is the Image Transfer Corona wire normal?	NO	Check and replace if necessary.
	9	Is the wiring between High Voltage Unit HV1 and corona wire normal?	YES	Replace HV1.
			NO	Correct wiring.
Paper guide shorting	10	Is the paper guide shorted to the frame?	YES	Connect the paper guide through the resistor to the frame.

(2) Black copy

Cause	Step	Check Item	Result	Action
PC Drum grounding failure	1	Is the PC Drum properly grounded?	NO	Clean or replace the PC Drum Ground Plate.
Developing bias failure	2	Is the developing bias contact normal?	NO	Clean or replace the developing bias contact.
	3	Is the developing bias harness normal?	YES	Replace the High Voltage Unit.
			NO	Replace the harness.
Light path failure	4	Has condensation formed on the mirrors, lens, or PC Drum?	YES	Clean the mirrors and lenses, and run the Drum Dehum operation.
	5	Are the mirrors installed properly?	NO	Reinstall the mirrors.
Exposure Lamp's failure to turn ON	6	Does the Exposure Lamp light up?	NO	Take the action for malfunction code C0400.

(3) Low Image Density

Cause	Step	Check Item	Result	Action
PC Drum life	1	Does the PC Drum have enough service life?	NO	Replace the PC Drum.
	2	Do the fan motors turn properly? (Ozone deterioration, temperature rise)	NO	Troubleshoot the fan motors.
PC Drum grounding failure	3	Is the PC Drum properly grounded?	NO	Clean or replace the PC Drum Ground Plate.
Drum charge failure	4	Are the PC Drum Charge Corona wire and grid mesh normal?	NO	Check and replace if necessary.
	5	Is the wiring between High Voltage Unit HV1 and corona wire normal?	YES	Replace HV1.
			NO	Correct the wiring.
Optical failure	6	Are the mirrors and lenses dirty or covered with condensation?	YES	Clean the mirrors and lenses.
Image transfer failure	7	Is the Image Transfer Corona dirty?	YES	Clean the Image Transfer Corona or replace the wire.
	8	Is the copy paper damp?	YES	Replace copy paper and instruct the user in how to store paper and to keep the copier plugged in during the night.
Developing failure	9	Is Db adjusted properly?	NO	Make Db adjustment.
	10	Are the Ds Rolls in contact with the PC Drum?	NO	Reinstall the Developing Unit.
	11	Is the developing bias contact normal?	NO	Clean or replace the developing bias contact.

(4) Foggy background

Cause	Step	Check Item	Result	Action
Cleaning failure	1	Is the Cleaning Blade dirty with foreign matter, paper dust, etc. or is it scratched?	YES	Change the Cleaning Blade.
Optical failure	2	Is the mirror or lens dirty?	YES	Clean the mirror or lens.
PC Drum failure	3	Is the PC Drum dirty with foreign matter, etc.?	YES	Clean or replace the PC Drum. Replace the Cleaning Blade if necessary.
	4	Is the PC Drum properly grounded?	NO	Clean or replace the PC Drum Ground Plate.
Developing failure	5	Is the Sleeve Roller abnormally dirty?	YES	Clean the Sleeve Roller. Check the Developer Scattering Prevention Seal to see if it is deformed or dirty.
	6	Is the developing bias contact normal?	NO	Clean or replace the developing bias contact.
Main Erase Lamp failure	7	Does the Main Erase Lamp light up properly?	NO	Replace the Main Erase Lamp.
	8	Is the Main Erase Lamp dirty?	YES	Clean the Main Erase Lamp.

(5) Black Streaks or Bands

Cause	Step	Check Item	Result	Action
Uneven charging	1	Are the PC Drum Charge Corona wire and grid mesh dirty?	YES	Clean or replace the PC Drum Charge Corona. Check the operation of the toner charging mechanism.
Cleaning failure	2	Is the Cleaning Blade dirty with foreign matter, paper dust, etc., or is it scratched?	YES	Replace the Cleaning Blade.
	3	Does the Cleaning Blade make a correct lateral motion?	NO	Check the operation of the Cleaning Blade.
PC Drum failure	4	Is the PC Drum surface dirty or scratched?	YES	Replace the PC Drum. If necessary, replace the Cleaning Blade.
PC Drum Paper Separator Fingers	5	Are the PC Drum Paper Separator Fingers dirty, deformed or faulty in operation?	YES	Clean or replace the PC Drum Paper Separator Fingers.
Fusing failure	6	Is the Upper Fusing Roller dirty or scratched?	YES	Clean or replace the Upper Fusing Roller.
	7	Are the Upper Paper Separator Fingers dirty or deformed?	YES	Clean or replace the Upper Paper Separator Fingers.
Optical failure	8	Is the mirror or lens dirty with foreign matter?	YES	Clean the mirror or lens.

(6) Black Spots

Cause	Step	Check Item	Result	Action
PC Drum failure	1	Is the PC Drum surface scratched or dirty with foreign matter?	YES	Clean or replace the PC Drum. If necessary, replace the Cleaning Blade.
Fusing failure	2	Is the Upper Fusing Roller dirty or scratched?	YES	Check the Fusing Thermistors. Clean or replace the Upper Fusing Roller.
Developing failure	3	Is the amount of toner on the Sleeve Roller proper?	YES	To step 7.
	4	Is the toner-to-carrier ratio relatively high?	YES	Change the toner-to-carrier ratio.
	5	Is the Db value normal?	NO	Make Db adjustment.
	6	Is the Developer Scattering Prevention Seal deformed or dirty?	YES	Clean or replace the Developer Scattering Prevention Seal.
Dirty PC Drum Paper Separator Fingers	7	Are the PC Drum Paper Separator Fingers dirty or deformed?	YES	Clean or replace the PC Drum Paper Separator Fingers.

(7) Blank Streaks or Bands

Cause	Step	Check Item	Result	Action
Plugged Db	1	Is the Db plugged with foreign matter, caked toner, etc.?	YES	Remove foreign matter. If the problem persists, replace the developer.
Drum charge failure	2	Are the PC Drum Charge Corona wire and grid mesh dirty?	YES	Clean or replace the PC Drum Charge Corona.
	3	Is the Drum Charge Corona Wire Cleaner at the home position?	NO	Check the corona wire cleaning mechanism.
Image transfer failure	4	Is the Image Transfer Corona wire dirty?	YES	Clean or replace the Image Transfer Corona.
	5	Is the Corona Wire Cleaner at the home position?	NO	Check the corona wire cleaning mechanism.
Defective PC Drum Paper Separator Fingers	6	Are the PC Drum Paper Separator Fingers dirty or deformed?	YES	Clean or replace the PC Drum Paper Separator Fingers.
Image Erase Lamp lit at abnormal timing	7	Does the Image Erase Lamp light up at abnormal timing?	YES	Check the Image Erase Lamp.
Fusing failure	8	Is the Upper Fusing Roller dirty or scratched?	YES	Clean or replace the Upper Fusing Roller.
	9	Are the Upper Paper Separator Fingers dirty or scratched?	YES	Clean or replace the Upper Paper Separator Fingers.

(8) Void Areas

Cause	Step	Check Item	Result	Action
Image transfer failure	1	Is the Image Transfer Corona installed correctly?	NO	Reinstall.
	2	Is the Image Transfer Corona wire dirty?	YES	Clean or replace the Image Transfer Corona wire.
Damp copy paper	3	Is the image improved by loading new paper?	YES	Change the copy paper and instruct the user in how to store paper and to keep the copier plugged in during the night.
Small amount of toner supplied	4	Is toner uniformly attracted onto the Sleeve Roller?	NO	Check the Db value and developer amount, and check the operation of the Bucket Roller.
PC Drum condensation	5	Is the image improved by running Drum Dehum?	YES	Run Drum Dehum and instruct the user to take further action.
Paper guide shorting	6	Is the paper guide shorted to the frame?	YES	Connect the paper guide through the resistor to the frame.
Fusing failure	7	Is the Lower Fusing Roller scratched or deformed?	YES	Replace the Lower Fusing Roller.

(9) Smear on Back

Cause	Step	Check Item	Result	Action
Dirty Developing Unit	1	Is the bottom part of the Developing Unit dirty?	YES	Clean and check the Developer Scattering Prevention Seal.
Dirty Image Transfer Corona	2	Is the Image Transfer Corona dirty?	YES	Clean the corona and check the Developing Unit.
	3	Is the Pre-Image Transfer Guide Plate dirty?	YES	Clean the guide plate and check the Developing Unit.
Dirty Suction Unit	4	Are the Suction Belts dirty?	YES	Clean the Suction Belts and check the Developing Unit.
Dirty Fusing Unit	5	Is the Fusing Unit Entrance Guide Plate dirty?	YES	Clean the guide plate and check the Developing Unit.
	6	Are the Upper and Lower Fusing Rollers dirty?	YES	Clean or replace the Upper and Lower Fusing Rollers and check the Fusing Roller cleaning mechanism.