9-5. Scanner and 2nd/3rd Mirrors Carriage Moving Mechanism

- The Scanner and the 2nd/3rd Mirrors Carriage are driven by Scanner Motor M2 through the Scanner Drive Cable, gears and timing belt.
- Both the Scanner and 2nd/3rd Mirrors Carriage slide along the Scanner Shaft in the rear of the copier. While at the front end, there is a Slide Collar attached to each of the bodies and that Collar slides over the Slide Rail. The speed of the Scanner varies with different zoom ratios (150.0 mm/second in the full size mode).
- Scanner Reference Position Sensor PC81 detects the home position of the Scanner. It determines the reference position for the scan motion.

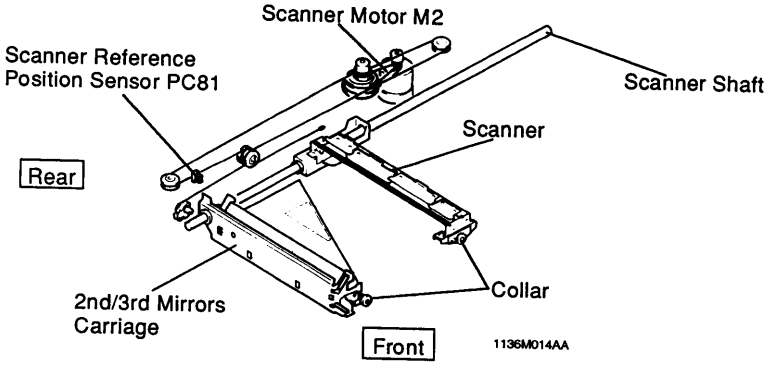

9-6. Scanner Motor M2 Control

<Overview>

- A DC servomotor is used for Scanner Motor M2. The pulse width modulation, or PWM, control is employed in which the average voltage is controlled by varying the width of the Scanner drive pulse which is the voltage input to the Motor.
- A photosensor and a pulse disk are built into M2. Their function is to convert the Motor shaft speed into the corresponding series of pulses. This pulse signal is input to SCP Board PWB-J.
- PWB-J then calculates the Motor speed using the period of the pulse signal applied to it and controls the Scanner drive pulse which is to be applied to the Motor. This effectively stabilizes the Motor speed.
- The pulse signal applied to PWB-J is also used to determine the distance over which the Scanner should travel. This distance is represented by the number of pulses corresponding to each paper size and zoom ratio.