13-8-4. Manual Bypass Take-Up Roll Control

The Manual Bypass Take-Up Rolls are pressed against, and released from, the paper stack and the Manual Bypass Take-Up/Feed Rolls are turned by operating the clutches and solenoids with the signals from Master Board PWB-A. See the circuit diagram below.
Operation timing is as follows.

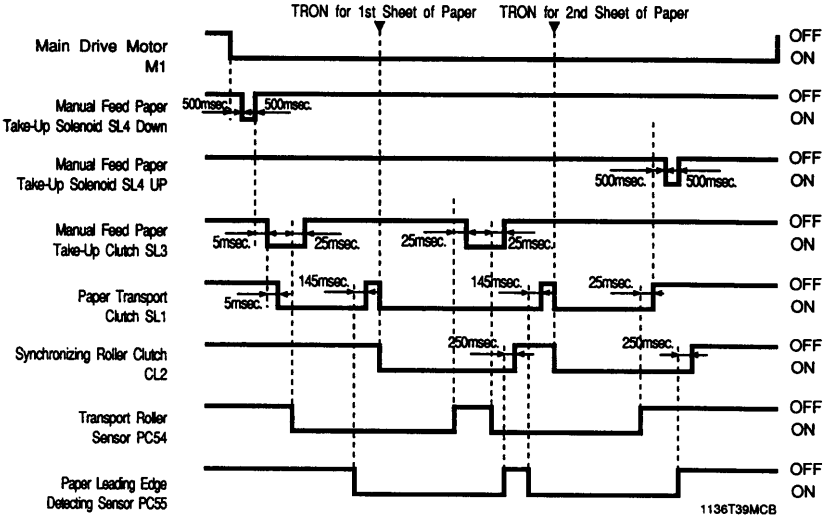

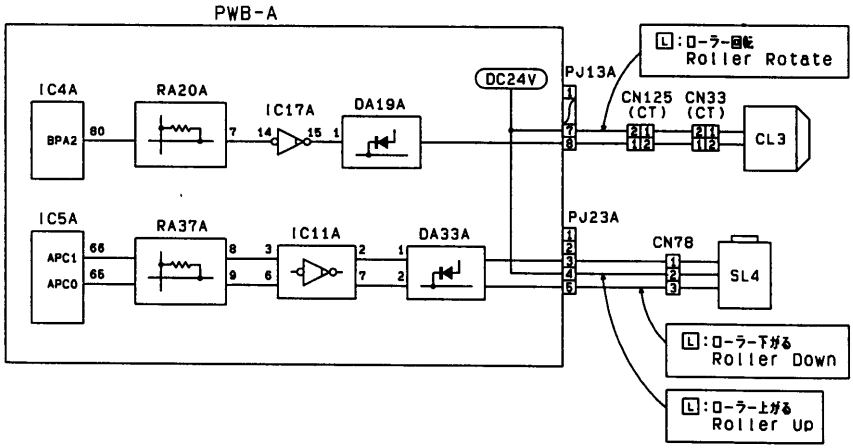

1136C22M