16-4. Image Transfer/Paper Separator Coronas Control

The Image Transfer/Paper Separator Coronas are turned ON and OFF by turning ON and OFF High Voltage Unit HV1. HV1 is turned ON and OFF by the signal from Master Board PWB-A as shown in the circuit diagram below.

Here is the timing chart for the operation of the Image Transfer/Paper Separator Coronas.

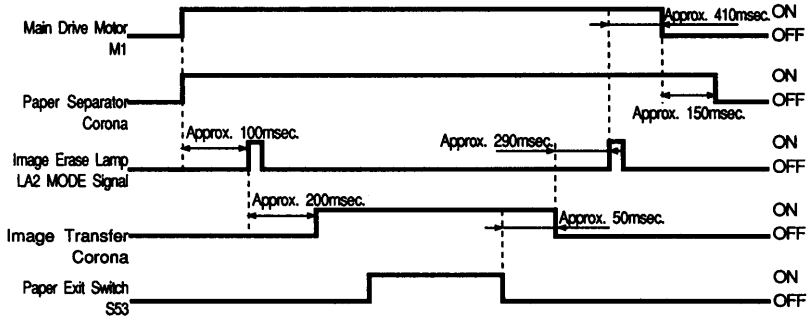

1136T42MCA

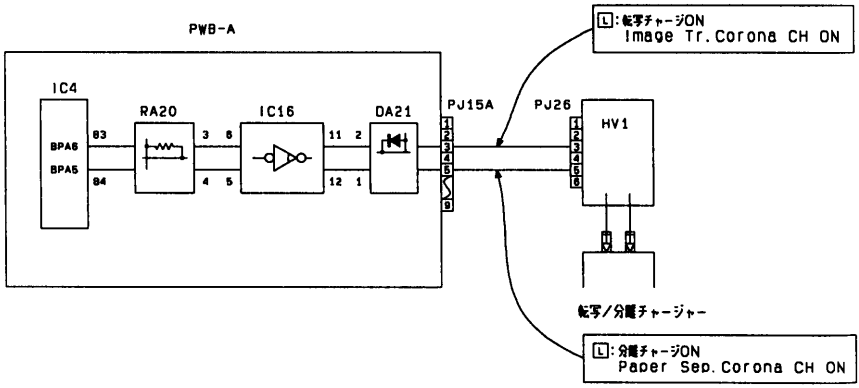

1136C27M