19-1. Construction

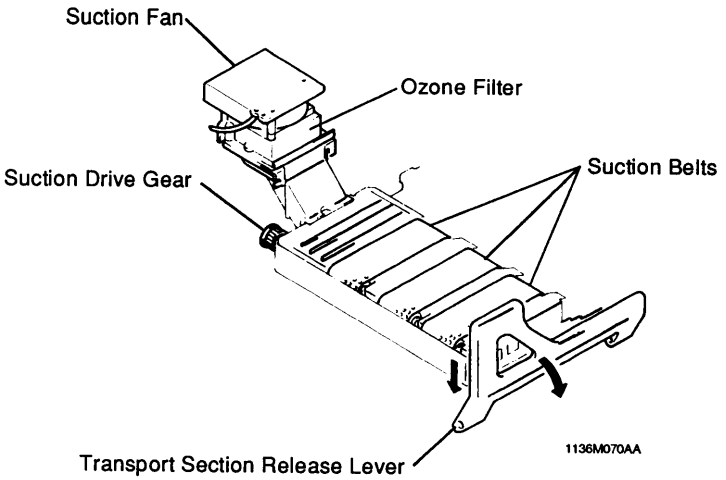

19-2. Transport Section Release Mechanism

Pulling the Transport Section Release Lever down swings the Transport Section down, pivoting at the rear of the copier. This facilitates clearing of misfeeds.

1. Pull down the Transport Section Release Lever.
2. The Transport Section Support Lever, coupled via gears to the Transport Section Release Lever, swings down toward the rear of the copier.
3. The front part of the Transport Section pivots at the rear of the copier to swing downward.

