19-4. Suction Fan Motor M4 Drive Control

Suction Fan Motor M4 turns at low speed in the standby state and at high speed during a copy cycle. The speed is switched by the signal from Master Board PWB-A as shown in the circuit diagram below.

A faulty M4 is detected by the signal input to IC4A as shown in the circuit diagram below.

M4 is energized at the following timing.

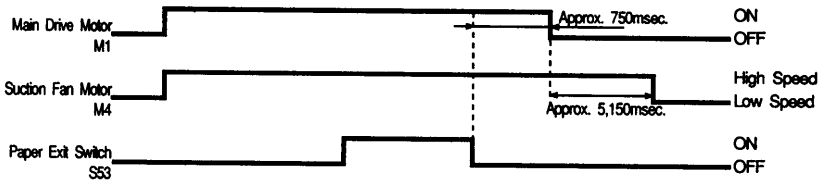

1136T46MCA

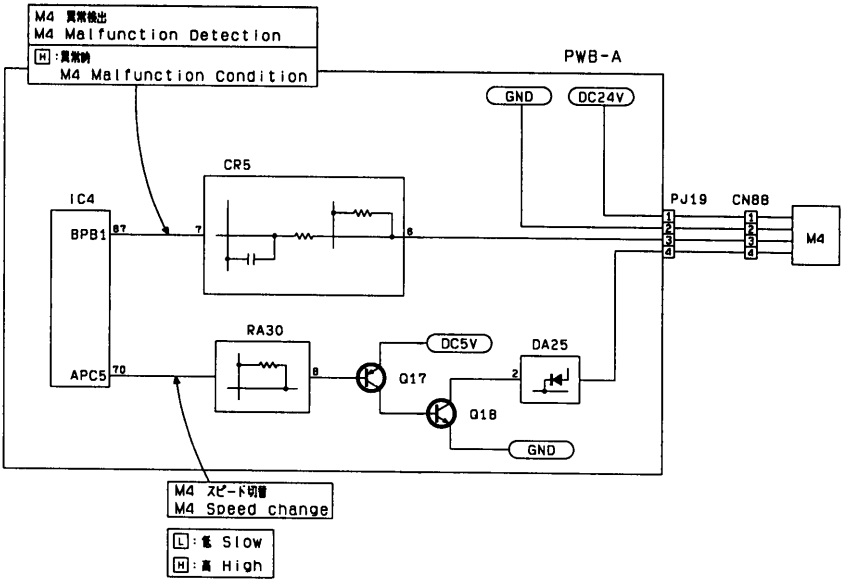

1136C32M