20-2. Fusing Rollers

<Upper Fusing Roller>

- Employed is a teflon-coated roller which features wear resistance and makes for improved fusing performance. It also repels the adherence of melted toner. Further, a conductive coating has been applied to the surface of the Upper Fusing Roller, thereby neutralizing any charges.

<Lower Fusing Roller>

- An elastic silicone rubber is used for the Lower Fusing Roller, offering a wider area of contact between the two Fusing Rollers. Since the roller is cleaned only indirectly, the silicone rubber is covered with a teflon tubing. This contributes to preventing smear on the Roller.

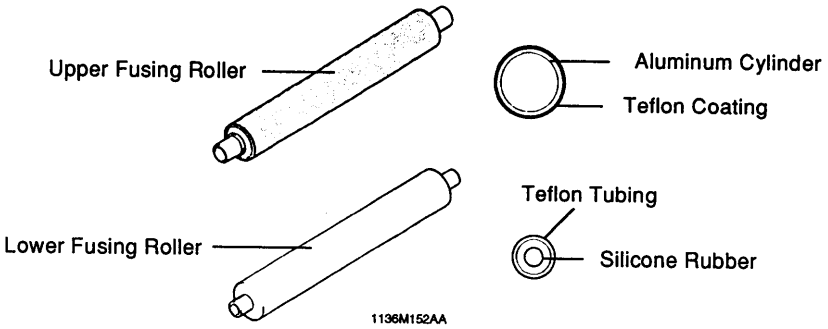

20-3. Fusing Rollers Pressure Mechanism

- To ensure that there is a certain width of area of contact between the Upper and Lower Fusing Rollers, the Pressure Springs are hooked onto the Pressure Holders at the front and rear ends of the Lower Fusing Roller.
- The other end of each of the Pressure Springs is hooked to the Pressure Lever, into which a Pressure Screw is installed. When the Pressure Screws are tightened, the Pressure Holders are raised. As a result, the Lower Fusing Roller is brought into tight contact with the Upper Fusing Roller.

