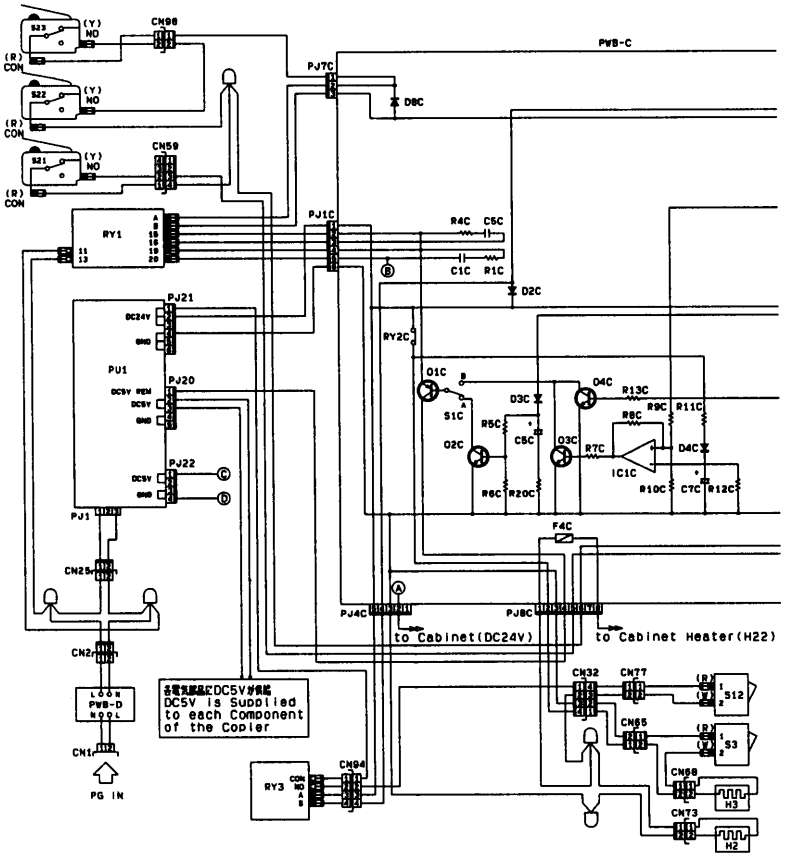
PWB-C
S23
S22
S21
(Y)
NO
(R)
CON
CN98
CN59
PJ7C
D8C
PJ1C
RY1
R4C
C6C
C1C
R1C
D2C
RY2C
PJ21
PJ20
PJ22
PU1
DC24V
DC5V
GND
PJ1
CN25
CN2
CN1
PWB-D
PG IN
O1C
S1C
O2C
O3C
D3C
D4C
R5C
C5C
R6C
R20C
R7C
IC1C
R8C
R9C
R13C
R11C
R10C
C7C
R12C
F4C
PJ4C
PJ8C
to Cabinet(DC24V)
to Cabinet Heater(H22)
DC5V is Supplied
to each Component
of the Copier
RY3
CN94
CN32
CN77
CN65
CN68
CN73
S12
S3
H3
H2