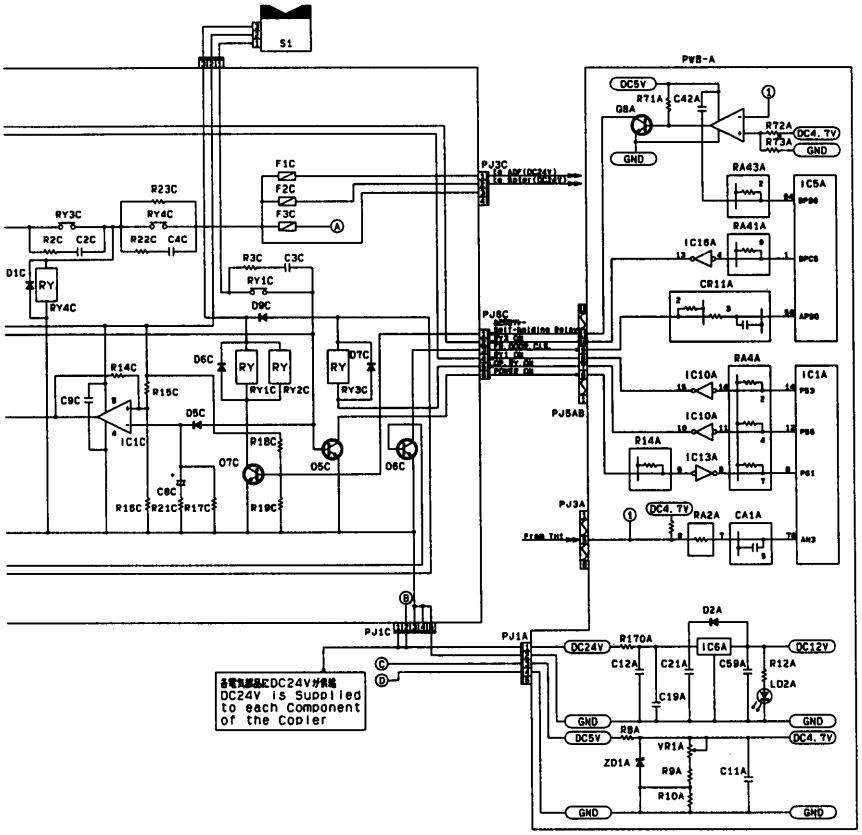
S1
PWB-A
DC5V
R71A
C42A
Q8A
R72A
R73A
DC4.7V
GND
F1C
F2C
F3C
PJ3C
RA43A
IC5A
R23C
RY3C
RY4C
R2C
C2C
R22C
C4C
RA41A
IC16A
D1C
RY
RY4C
R3C
C3C
RY1C
CR11A
D9C
PJ8C
D6C
RY
RY1C
RY2C
D7C
RY3C
R14C
R15C
C9C
IC1C
D5C
RA4A
IC10A
IC1A
PJ5AB
R18C
O7C
O5C
O6C
R14A
IC13A
C8C
R16C
R21C
R17C
R19C
PJ3A
DC4.7V
RA2A
CA1A
PJ1C
PJ1A
D2A
DC24V
R170A
IC6A
DC12V
C12A
C21A
C59A
R12A
LD2A
C19A
GND
DC5V
R8A
VR1A
DC4.7V
ZD1A
R9A
C11A
R10A
各電気部品にDC24Vが供給
DC24V is Supplied
to each Component
of the Copier

1136C0RM