3-2. Transport/Separator Misfeed

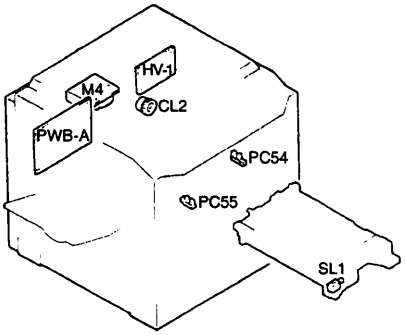

Symbol	Name
PC54	Transport Roller Sensor
PC55	Paper Leading Edge Detecting Sensor
CL2	Synchronizing Roller Clutch
SL1	Separator Solenoid
M4	Suction Fan Motor
PWB-A	Master Board
HV1	High Voltage Unit

1136T009AA

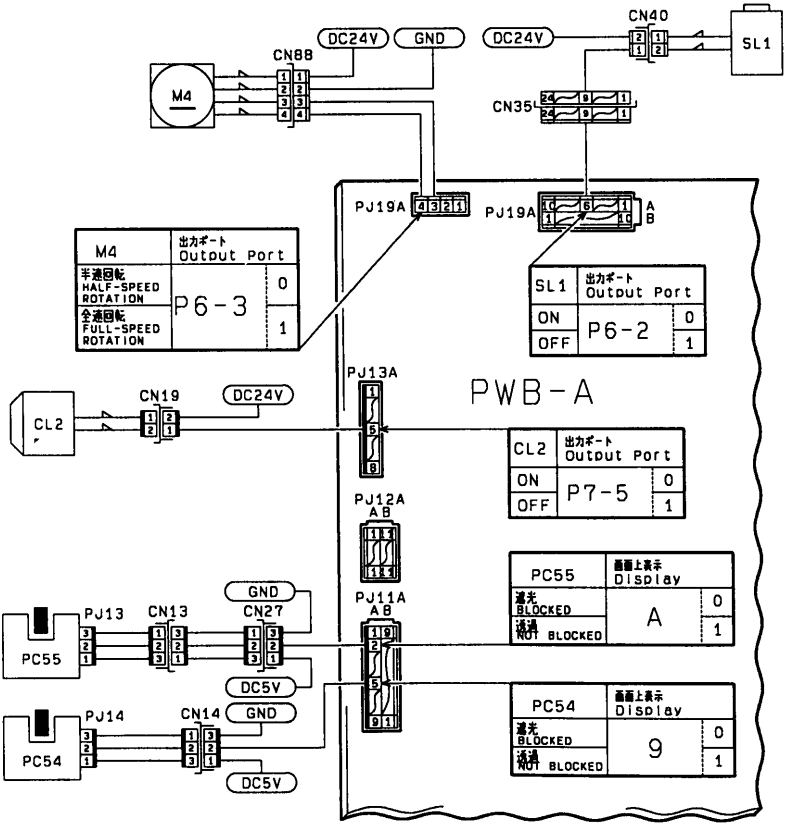

1136C03TAA