3-3. Multi Bypass Misfeed

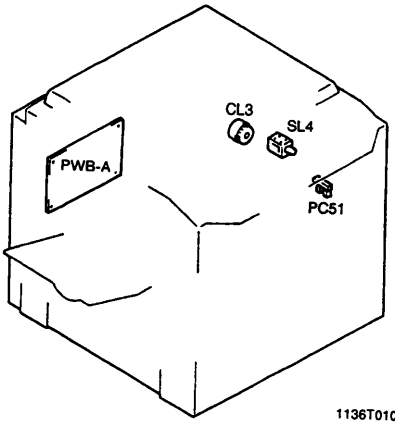

1136T010AA

Symbol	Name
PC51	Manual Feed Paper Empty Sensor
SL4	Manual Feed Paper Take-Up Solenoid
CL3	Manual Feed Paper Take-Up Clutch
PWB-A	Master Board

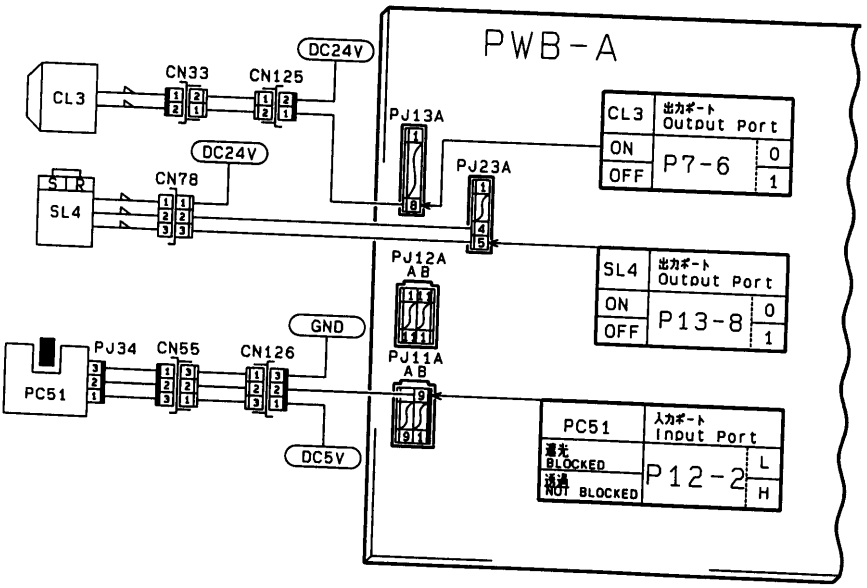

1136C05TAA