3-8. Duplex Unit Take-Up Misfeed

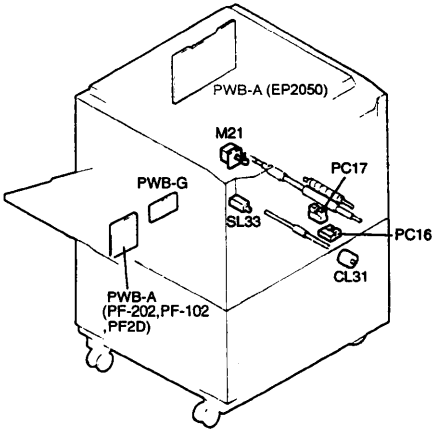

1136T002AA

Symbol	Name
PC16	Duplex Unit Paper Take-Up Sensor
PC17	Vertical Transport Sensor 3
SL33	Duplex Unit Pick-Up Solenoid
CL31	Duplex Unit Paper Take-Up Clutch
M21	Vertical Transport Drive Motor
PWB-A	EP2050 Master Board
PWB-A	PF-202/PF-102/PF-2D Master Board
PWB-G	Duplex Unit Master Board

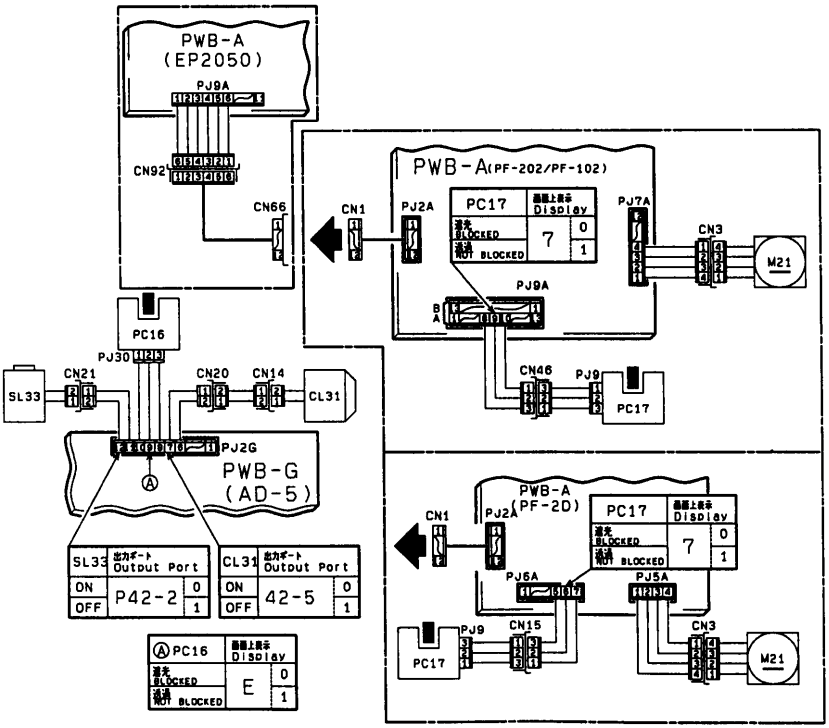

1136C26TAA