2-3. C0070: Main Hopper Toner Replenishing Motor M8's Failure to Turn
C0071: Main Hopper Toner Replenishing Motor M8 Turning at Abnormal Timing
C0072: Sub Hopper Toner Replenishing Motor M9's Failure to Turn

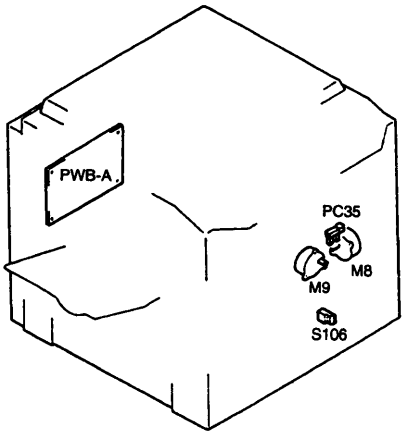

Symbol	Name
M8	Main Hopper Toner Replenishing Motor
M9	Sub Hopper Toner Replenishing Motor
PC35	Toner Bottle Home Position Sensor
S106	Sub Hopper Toner Empty Switch
PWB-A	Master Board

1136T014AA

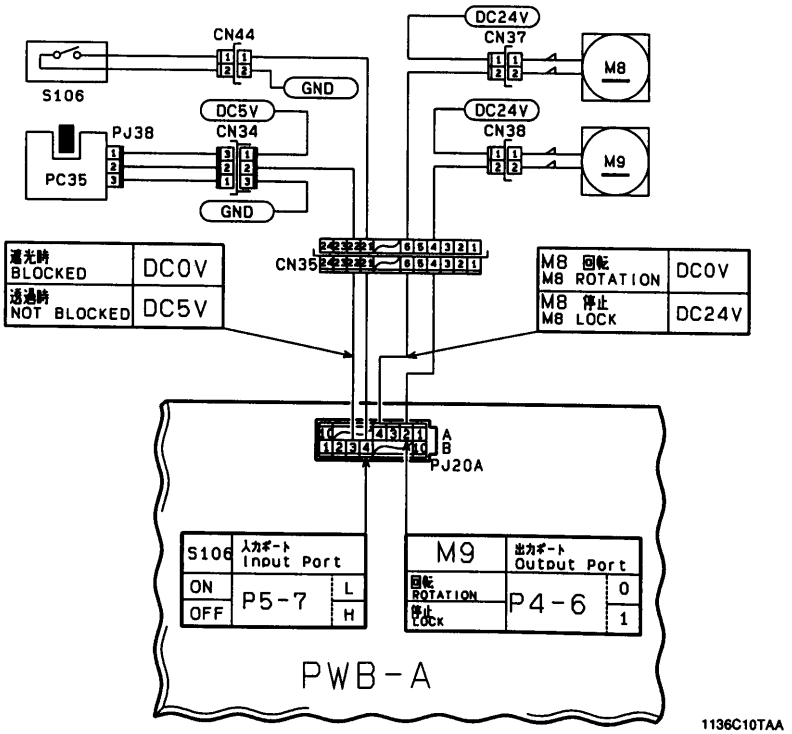

1136C10TAA