2-6. C0500: Warming-up Failure
C0510: Abnormally Low Fusing Temperature
C0520: Abnormally High Fusing Temperature
C0522: Fusing Front/Rear Thermistor TH1/2 Malfunction

Symbol	Name
H1	Fusing Heater Lamp
TS1	Fusing Thermoswitch
TH1	Fusing Front Thermistor
TH2	Fusing Rear Thermistor
SSR1	SSR
PWB-A	Master Board

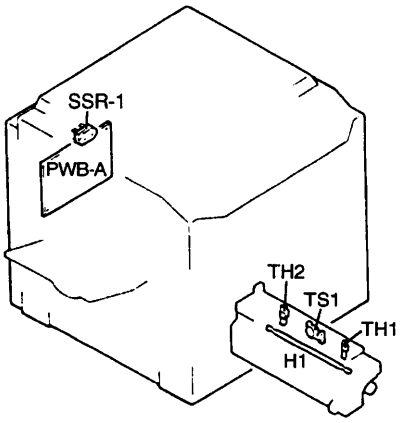

1136T017AA

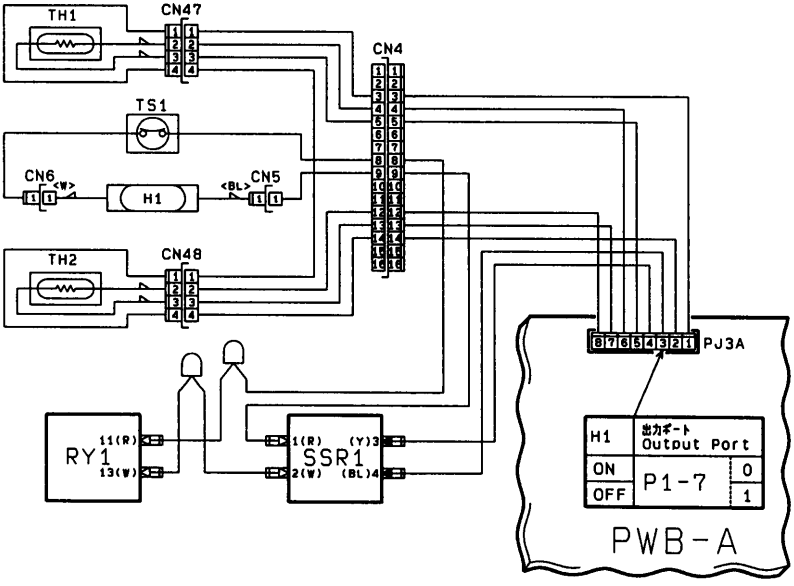

1136C13TAA