2-7. C0600: Scanner Motor M2 Malfunction
C0601: SCP Board PWB-J Malfunction
C0650: Scanner Reference Position Sensor PC81 Malfunction
C0660: Scanner Load Failure
C06F0 to C06F7: SHOME, BASE, TRON, and SCEND Signal Failure

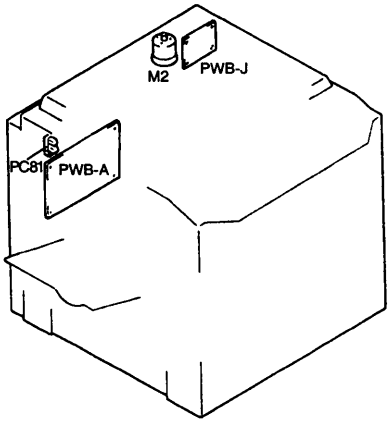

Symbol	Name
PC81	Scanner Reference Position Sensor
M2	Scanner Motor
PWB-J	SCP Board
PWB-A	Master Board

1136T018AA

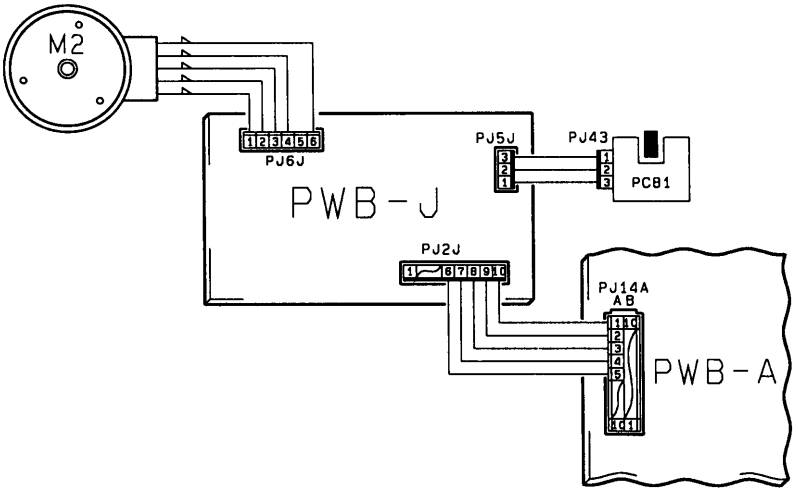

1136C14TAA