2-8. C0610: Lens Motion Failure
C0620: 4th/5th Mirrors Motion Failure

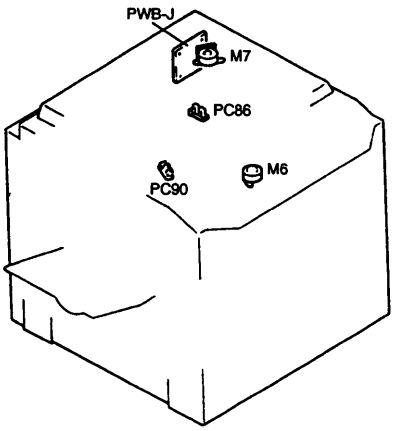

Symbol	Name
PC86	Mirror Reference Position Sensor
PC90	Lens Reference Position Sensor
M6	Lens Motor
M7	Mirror Motor
PWB-J	SCP Board

1136T019AA

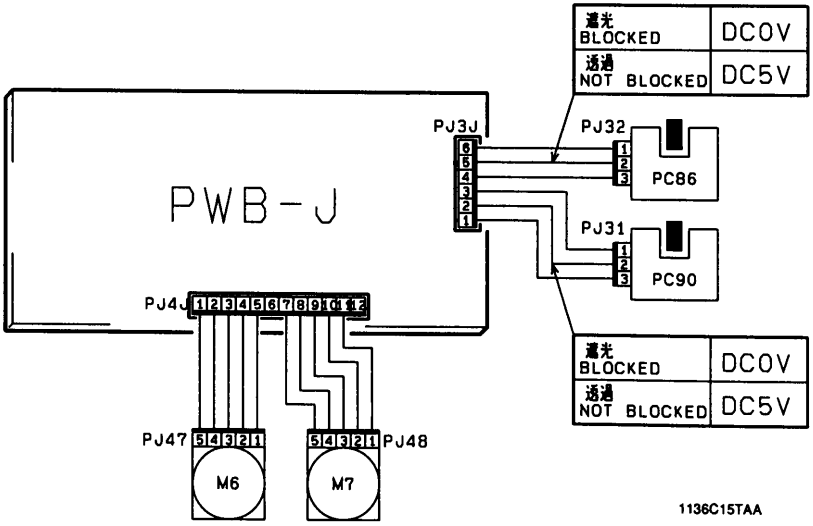

1136C15TAA