2-9. C0E00: Main Erase Lamp LA3's Failure to Turn ON
C0E01: Main Erase Lamp LA3 turning ON at Abnormal Timing

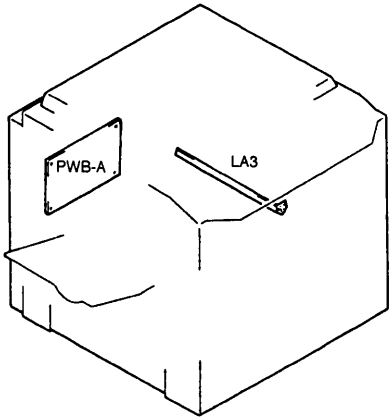

Symbol	Name
LA3	Main Erase Lamp
PWB-A	Master Board

1136T020AA

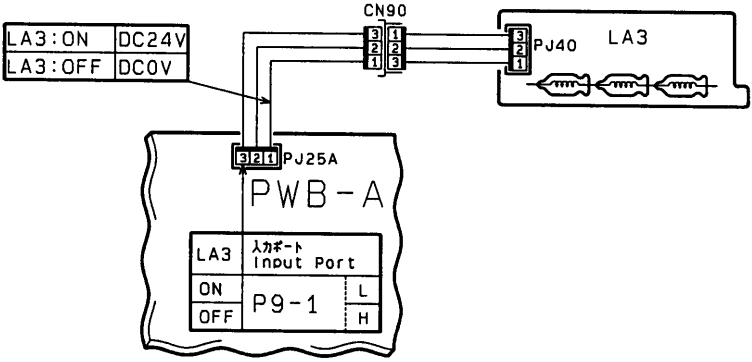

1136C16TAA