2-15. C0900: 3rd Drawer Paper Lift-Up Failure
C0904: 3rd Drawer Paper Lift-Up Motor's Failure to Turn (except the U.S.A. and Canada)
C0950: 4th Drawer Paper Lift-Up Failure
C0954: 4th Drawer Paper Lift-Up Motor's Failure to Turn

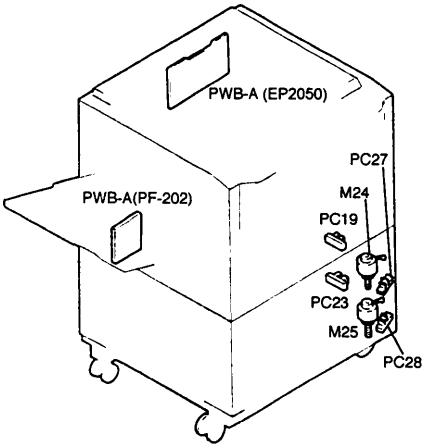

1136T033AA

Symbol	Name
PC19	3rd Drawer Paper Lift-Up Sensor
PC23	4th Drawer Paper Lift-Up Sensor
PC27	3rd Drawer Paper Lift-Up Motor Pulse Sensor
PC28	4th Drawer Paper Lift-Up Motor Pulse Sensor
M24	3rd Drawer Paper Lift-Up Motor
M25	4th Drawer Paper Lift-Up Motor
PWB-A	EP2050 Master Board
PWB-A	PF-202 Master Board

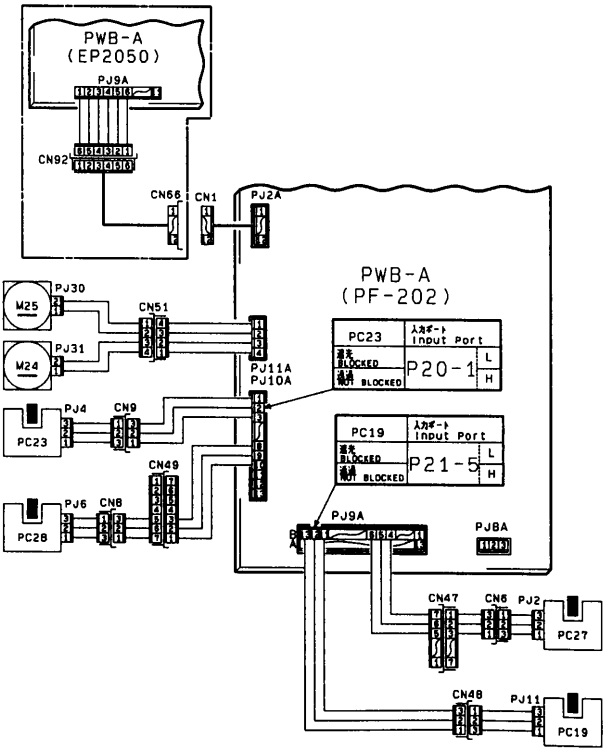

1136C28TAA