2-16. C0990: Main Tray Upward Motion Failure
C0991: Main Tray Downward Motion Failure
C0992: Main Tray Downward Motion Failure
C0993: Main Tray Upward Motion Failure
C0994: Main Tray Elevator Motor M26's Failure to Turn

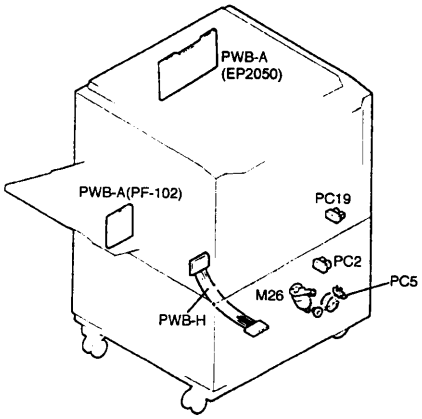

1136T029AA

Symbol	Name
PC2	Main Tray Lower Position Sensor
PC5	Elevator Motor Pulse Sensor
PC19	3rd Drawer Paper Lift-Up Sensor
M26	Main Tray Elevator Motor
PWB-A	EP2050 Master Board
PWB-A	PF-102 Master Board
PWB-H	Cabinet Transport Board

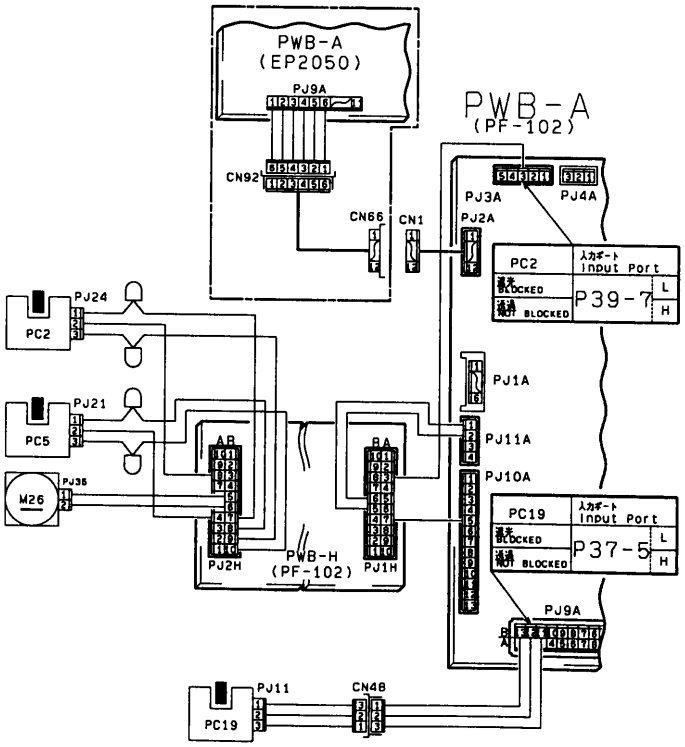

1136T029AA