2-17. C0998: Shifter Transfer Failure
C0999: Shifter Return Failure
C099A: Shifter Return Failure
C099b: Shifter Transfer Failure
C099C: Shift Motor M27's Failure to Turn

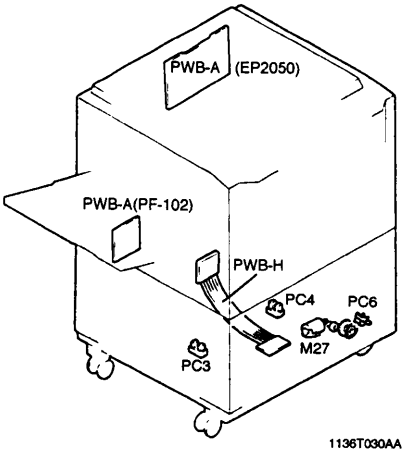

1136T030AA

Symbol	Name
PC3	Shifter Home Position Sensor
PC4	Shifter Return Position Sensor
PC6	Shift Motor Pulse Sensor
M27	Paper Shift Motor
PWB-A	EP2050 Master Board
PWB-A	PF-102 Master Board
PWB-H	Cabinet Transport Board

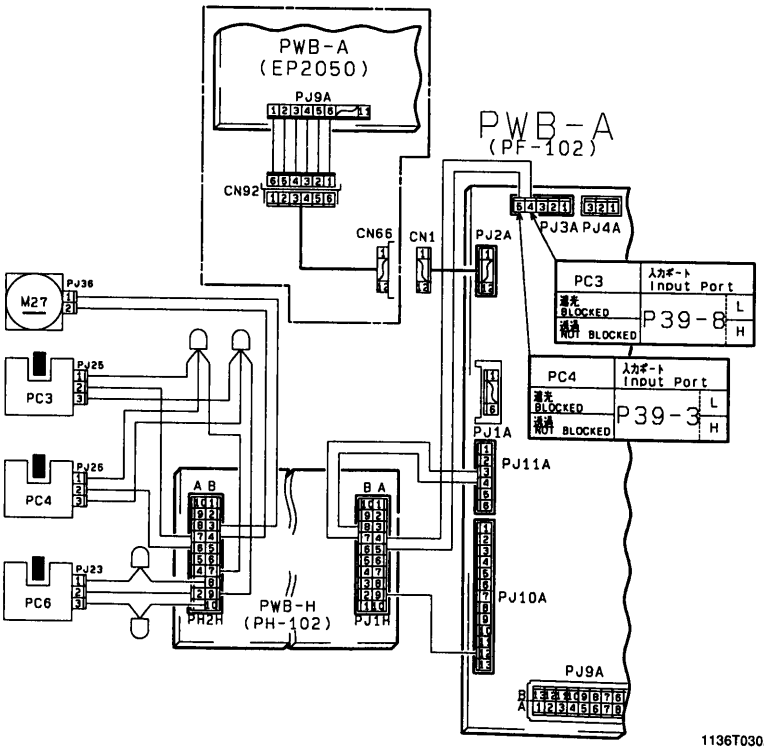

1136T030AA