2-19. C0d00: Duplex Unit Front/Rear Edge Guide Plates Home Position Detection Failure
C0d20: Duplex Unit Trailing Gate Unit Home Position Detection Failure
C0d50: Duplex Unit Drive Motor M31's Failure to Turn
C0d51: Duplex Unit Drive Motor M31 Turning at Abnormal Timing

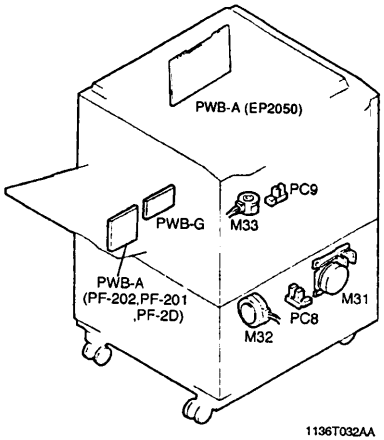

1136T032AA

Symbol	Name
PC8	Duplex Gate Home Position Sensor
PC9	Front/Rear Edge Guide Plate Home Position Sensor
M31	Duplex Unit Drive Motor
M32	Gate Motor
M33	Front/Rear Edge Guide Drive Motor
PWB-A	EP2050 Master Board
PWB-A	PF-202/PF-102/PF-2D Master Board
PWB-G	Duplex Unit Master Board

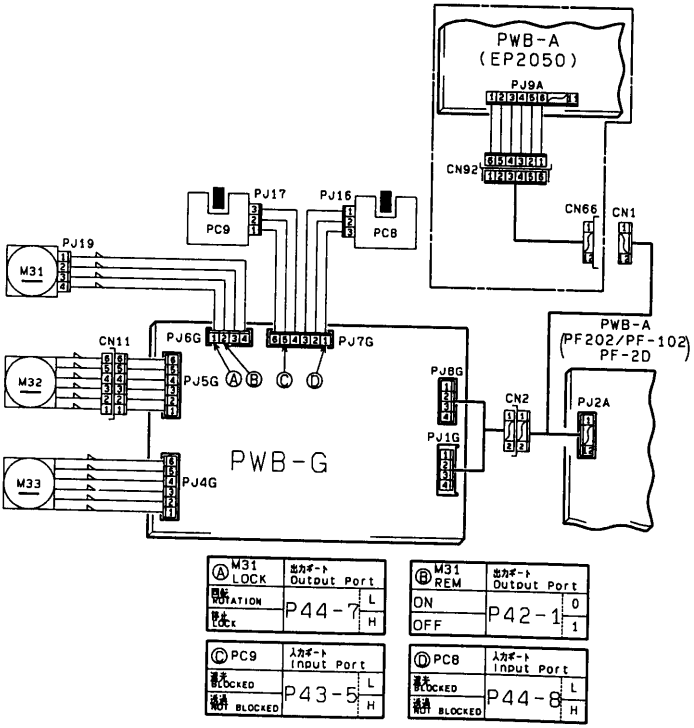

1136C32TAA