3. Power is not Turned ON

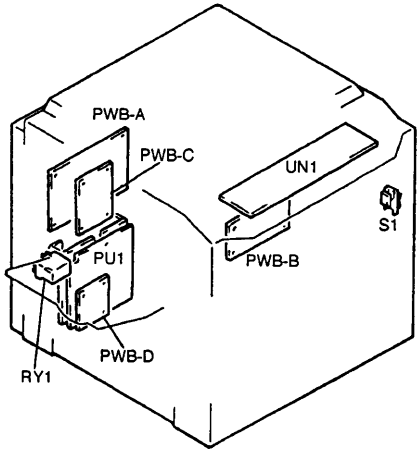

Symbol	Name
S1	Power Switch
RY1	Main Relay
UN1	Control Panel
PWB-B	MSC Board
PWB-A	Master Board
PWB-C	Power Supply Board
PWB-D	Noise Filter Board
PU1	DC Power Supply Unit

1136T026AA

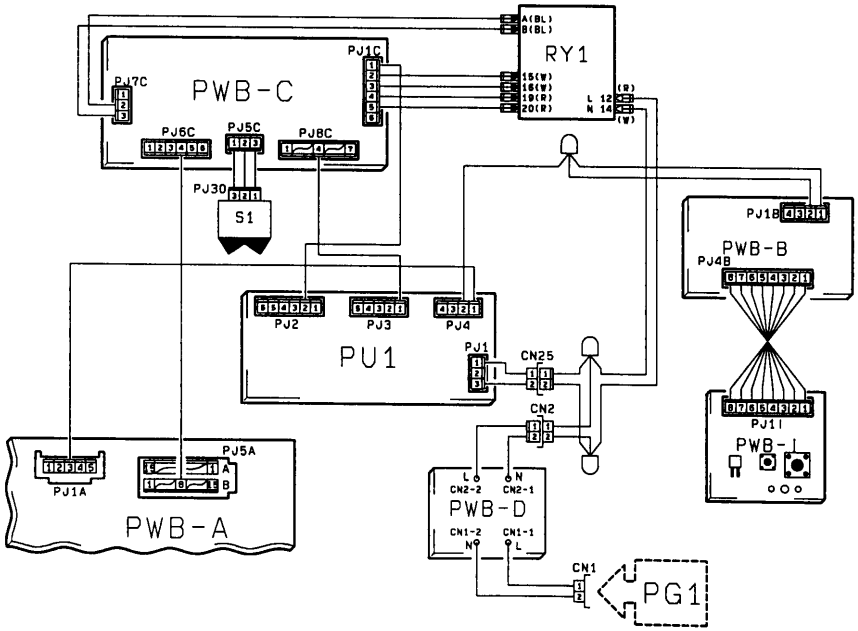

1136C22TAA