10. Disassemble the Paper Take-Up Roll/Feed Roll Assy.

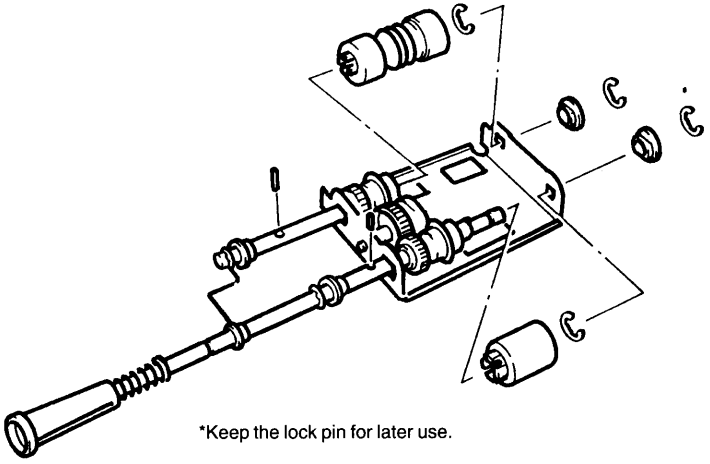

*Keep the lock pin for later use.

1156D017AA

(3) Cleaning of the Paper Take-Up Roll, Feed Roll, and Separator Roll

1. Remove each Paper Take-Up Roll/Feed Roll Assy.
2. Remove each Paper Separator Roll Assy.
3. Using a soft cloth dampened with alcohol, wipe each roll clean of dirt.

Cleaning the Paper Take-up Roll/Feed Roll

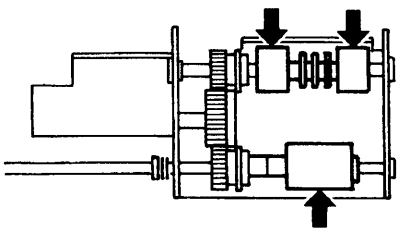

1156D018AA

Cleaning the Paper Separator Roll

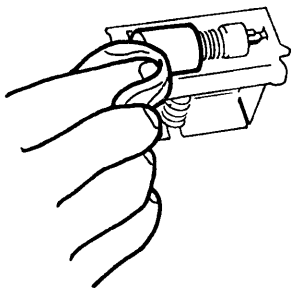

1156D019AA