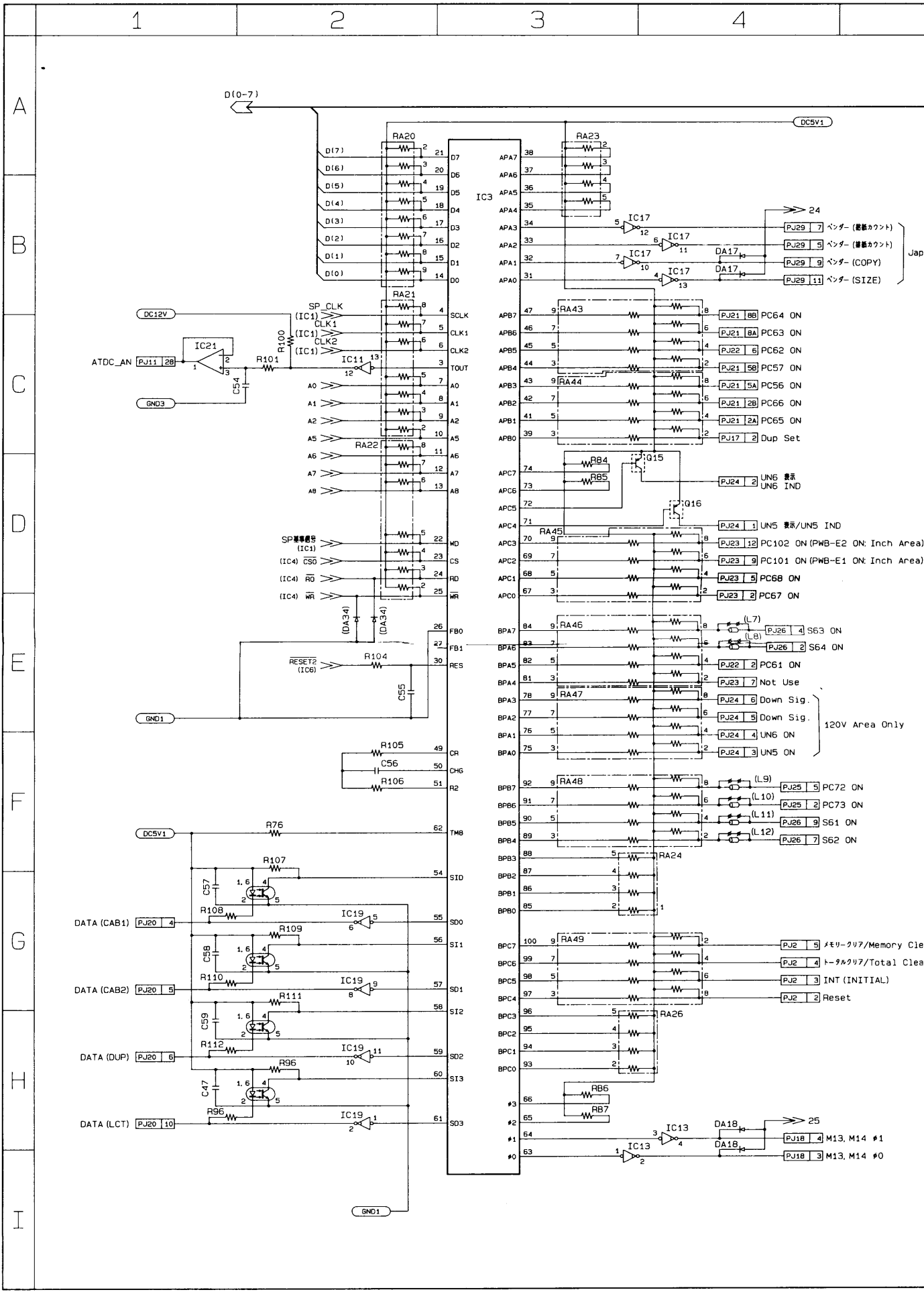

1
2
3
4
A
B
C
D
E
F
G
H
I
D(0-7)
DC5V1
RA20
RA21
RA22
RA23
RA24
RA26
RA43
RA44
RA45
RA46
RA47
RA48
RA49
IC3
IC17
IC19
IC21
IC11
IC13
DA17
DA18
DC12V
GND3
GND1
ATDC_AN
SP_CLK
CLK1
CLK2
R100
R101
C54
SP基準信号
RESET2
R104
C55
R105
C56
R106
R76
R107
R108
R109
R110
R111
R112
R96
C57
C58
C59
C47
DATA (CAB1)
DATA (CAB2)
DATA (DUP)
DATA (LCT)
(DA34)
PJ29 7 ペンダー (給紙カウント)
PJ29 5 ペンダー (排紙カウント)
PJ29 9 ペンダー (COPY)
PJ29 11 ペンダー (SIZE)
Jap
PJ21 8B PC64 ON
PJ21 8A PC63 ON
PJ22 6 PC62 ON
PJ21 5B PC57 ON
PJ21 5A PC56 ON
PJ21 2B PC66 ON
PJ21 2A PC65 ON
PJ17 2 Dup Set
R84
R85
Q15
Q16
PJ24 2 UN6 表示 UN6 IND
PJ24 1 UN5 表示/UN5 IND
PJ23 12 PC102 ON (PWB-E2 ON: Inch Area)
PJ23 9 PC101 ON (PWB-E1 ON: Inch Area)
PJ23 5 PC68 ON
PJ23 2 PC67 ON
(L7)
(L8)
PJ26 4 S63 ON
PJ26 2 S64 ON
PJ22 2 PC61 ON
PJ23 7 Not Use
PJ24 6 Down Sig.
PJ24 5 Down Sig.
PJ24 4 UN6 ON
PJ24 3 UN5 ON
120V Area Only
(L9)
(L10)
(L11)
(L12)
PJ25 5 PC72 ON
PJ25 2 PC73 ON
PJ26 9 S61 ON
PJ26 7 S62 ON
PJ2 5 メモリークリア/Memory Cle
PJ2 4 トータルクリア/Total Clea
PJ2 3 INT (INITIAL)
PJ2 2 Reset
RB6
RB7
PJ18 4 M13, M14 ø1
PJ18 3 M13, M14 ø0